DREAMS IDEA

Instruction Manual



DREAMS IDEA

NO.2005



ASSEMBLY INSTRUCTIONS

Tel.(562)-781-3327

Please contact us:info@firstopintl.com

https://www.dreamsidea.com

EXPLODED VIEW

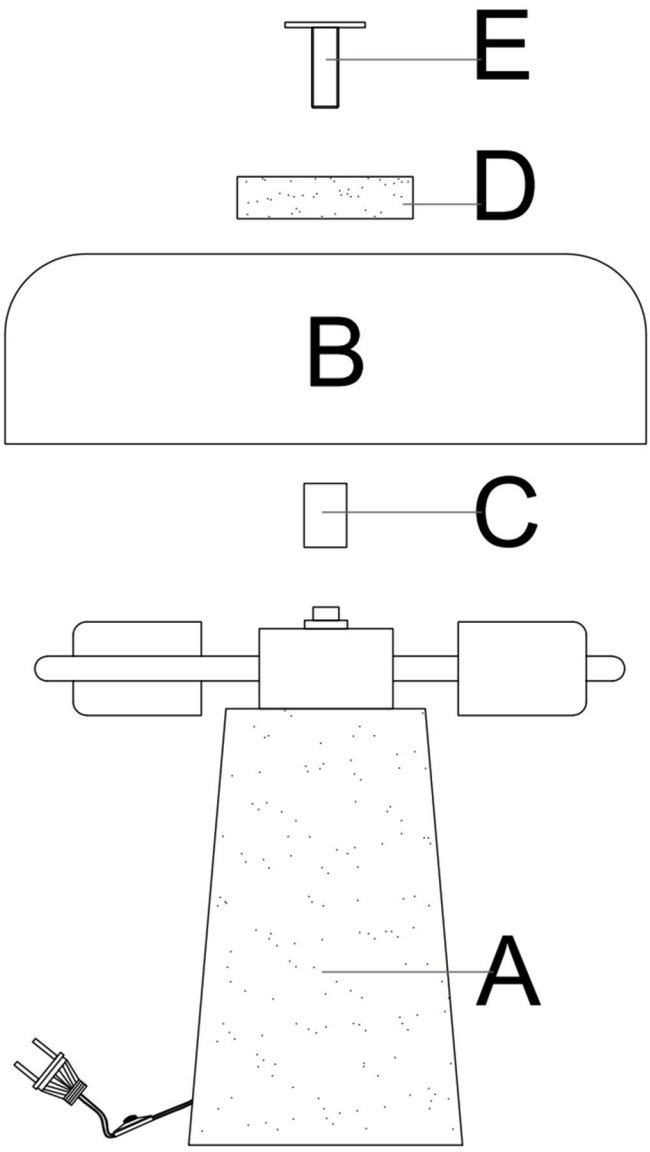

PARTS

AX1

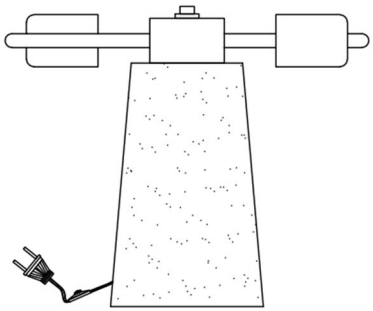

Fixture

BX1



Lightshade

CX1



Screw

DX1

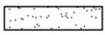

Iron ring

EX1



Finial

ATTENTION

Please inspect the wires
before installation, if the wire
shows any cut or abrasion,
or has exposed copper wires,
DO NOT use the fixture,
it might be caused during
transportation or defect product.

Before starting installation of
the fixture, please remove the
previous fixture (if any).
Disconnect the power by
turning off the electric break
for your property
(Please ask for professional
help if needed).

MAINTAINANCE AND WARNING

Verify the lamp model suits the environment (indoor/outdoor, IP rating) and check all accessories (body, screws, cord, manual).

Only use with bulbs of the recommended type and wattage. Exceeding the maximum wattage may cause overheating or fire.

Do not install the fixture if any part is damaged or missing. Contact the manufacturer or seller for replacement parts.

The fixture may become hot during use. Allow to cool before handling.

Clean dust accumulation in recessed lamps regularly (to prevent overheating), but only when powered off; never rinse with water.

If the fixture includes a dimmer switch, ensure it is compatible with the fixture before installation.

Do not modify the fixture in any way; tampering with electrical components can result in malfunction or risk of fire.

step 1 ---Install the screw (C)

Install the screw (C) into fixture (A).

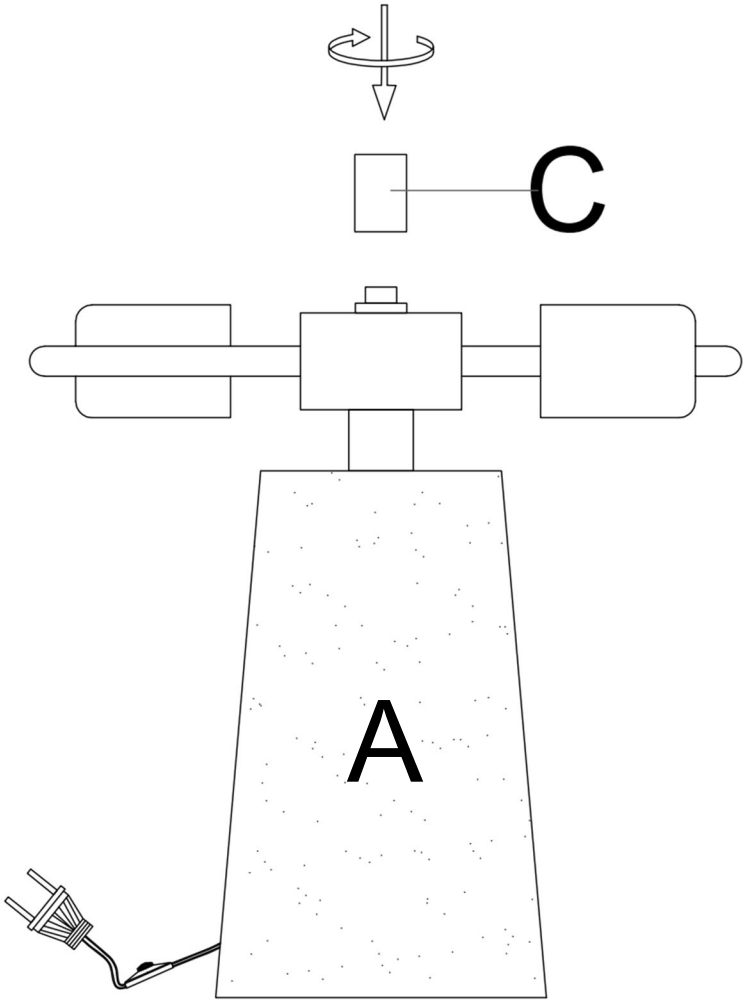

step 2 ---Install the lamp bulb.

Install the lamp bulb.

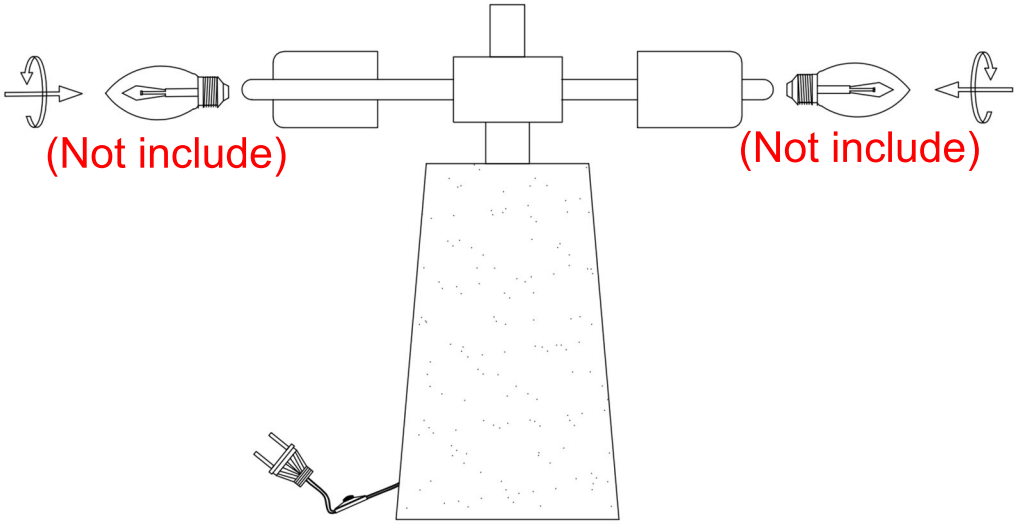

step 3 ---Install the Lightshade & Iron ring

Install the Lightshade (B) into fixture (A).
Install the Iron ring (D) into Lightshade (B).

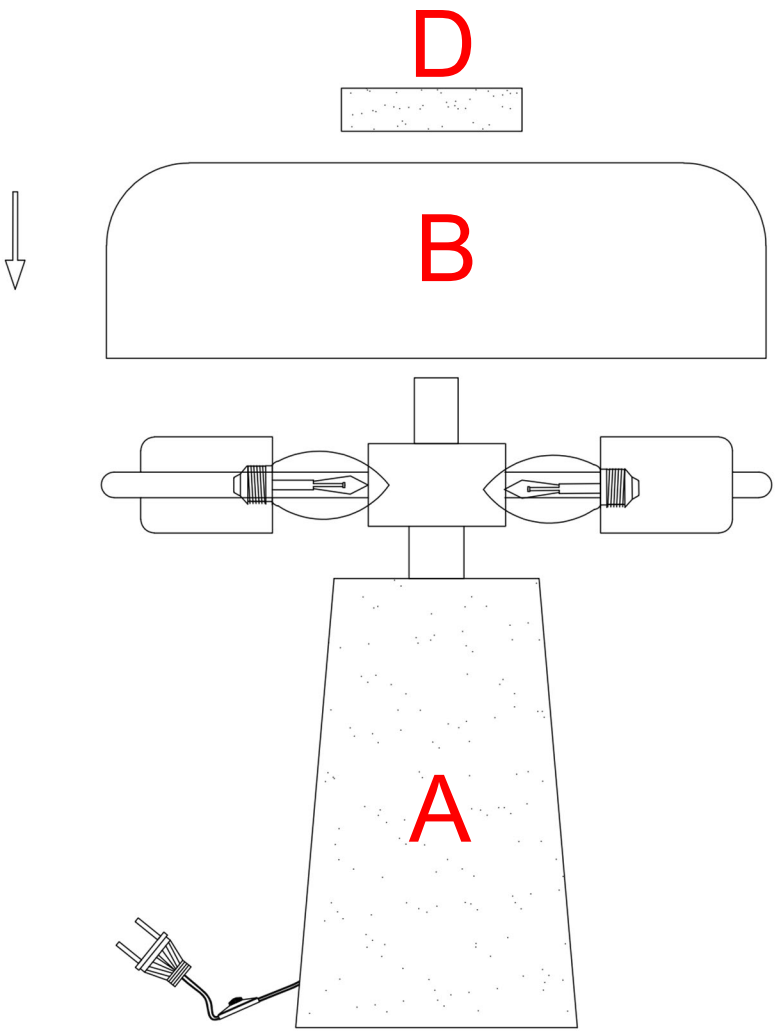

step 4 ---Install the Finial (E)

Install the Finial (E) into Iron ring (D).

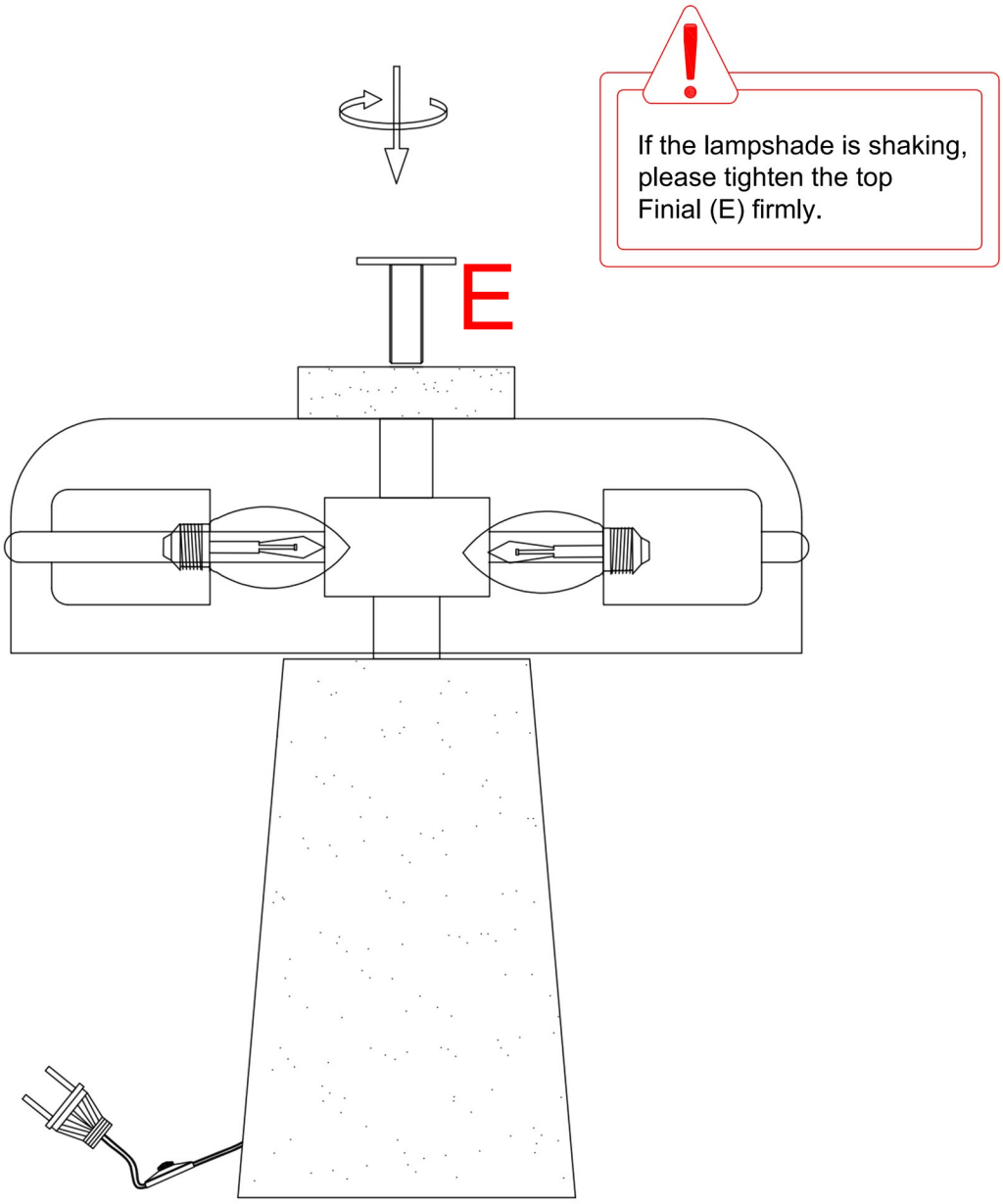

step 5 ---Light-control

This lamp is controlled by adjusting the switch to regulate the brightness.

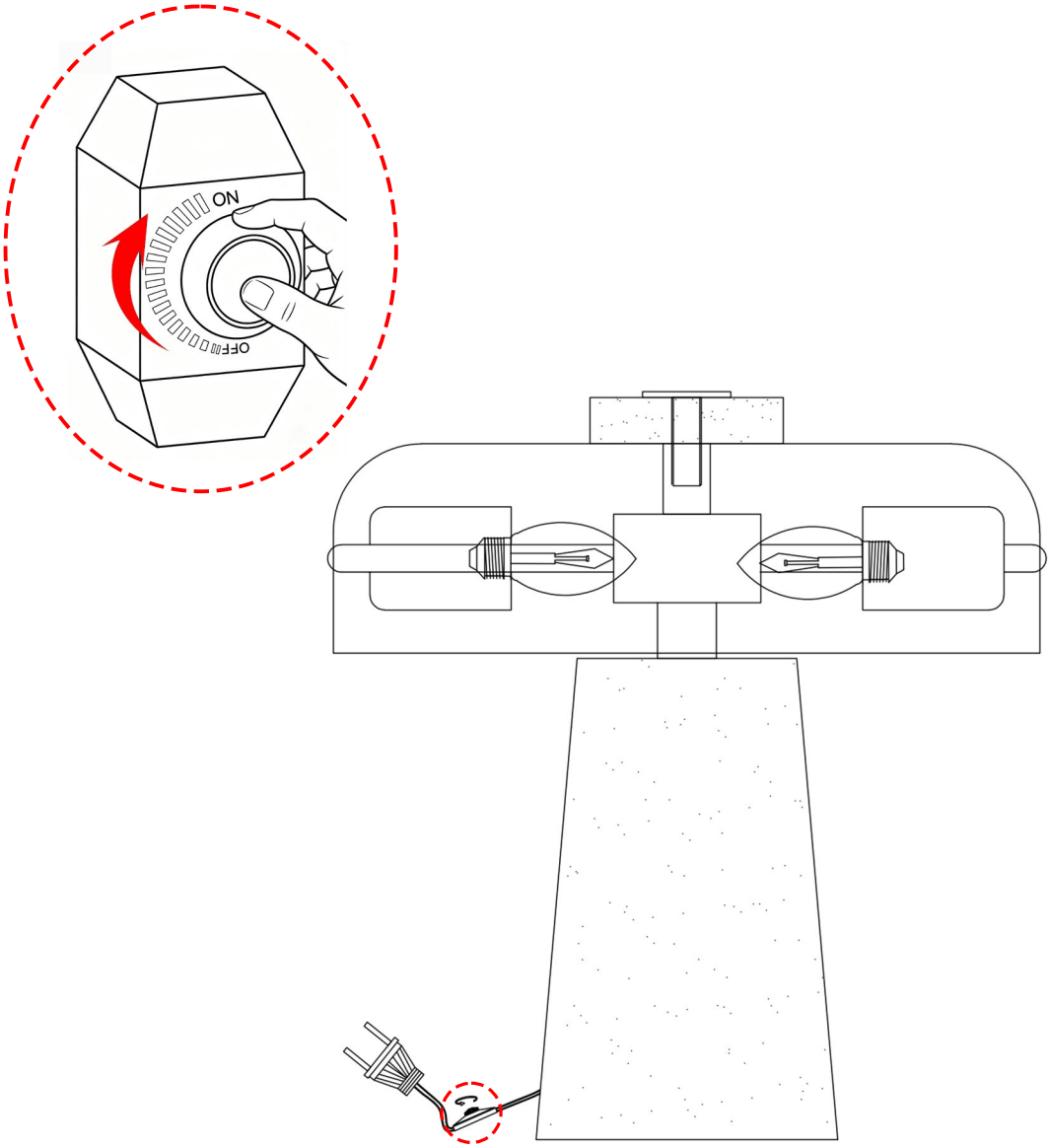

step 6 ---Assembly complete

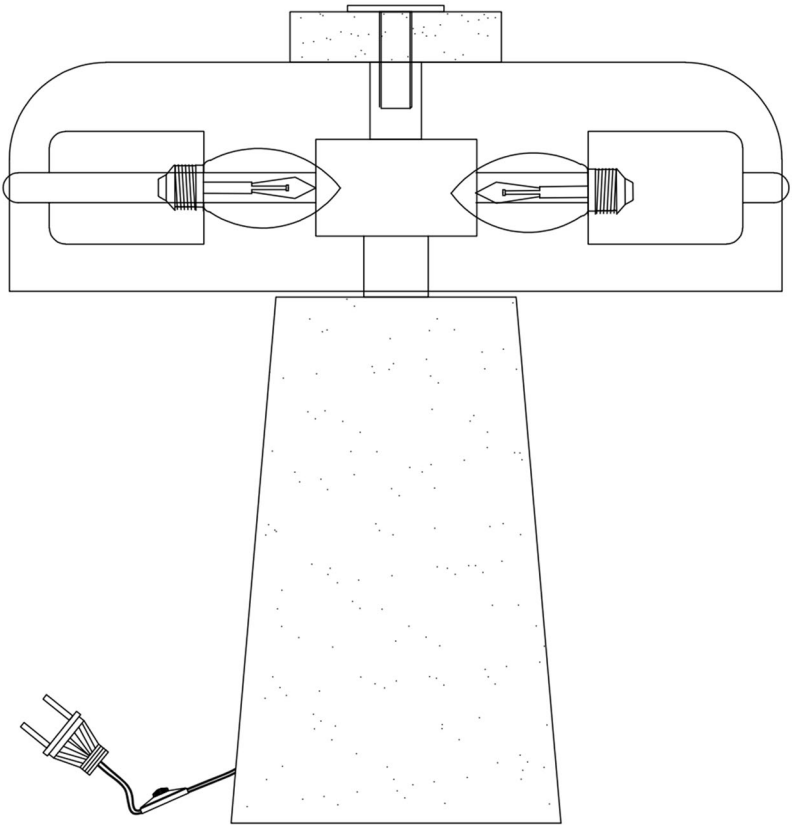

Product Overview



2005-S



2005-M