ITEM TYPE	ITEM ID	ITEM DESCRIPTION	DRAWING STATUS
FG	Reference	Vtop SE 61x22 Rect 8in DB Separate Backsplash	R&D

REV	DESCRIPTION	DATE	APPROVAL
0	RELEASED	03/11/24	E. SANDOVAL

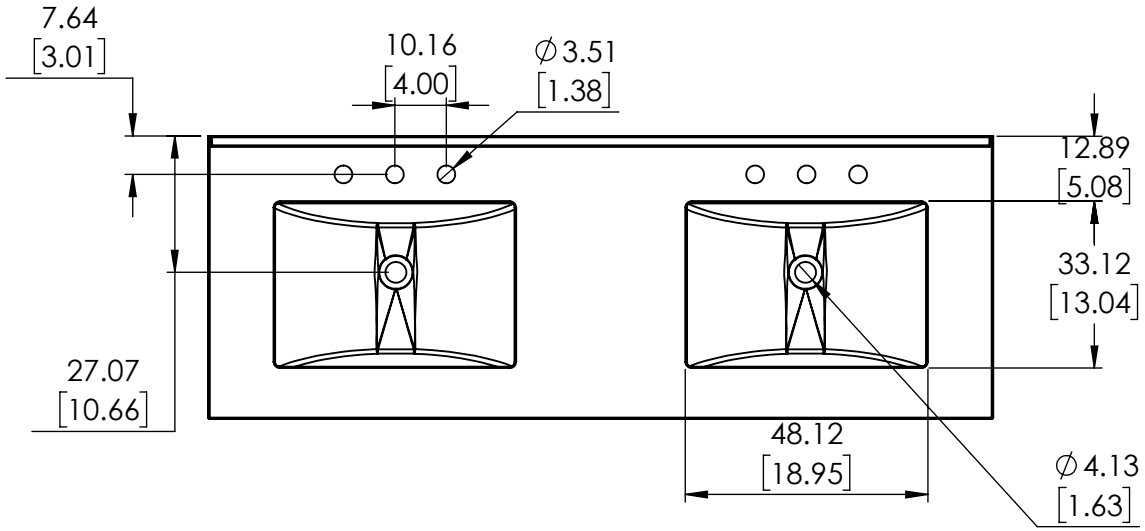

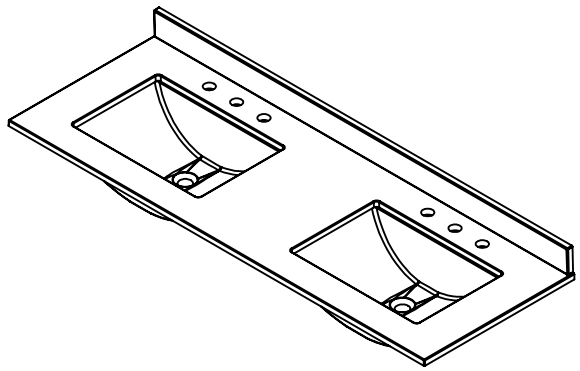

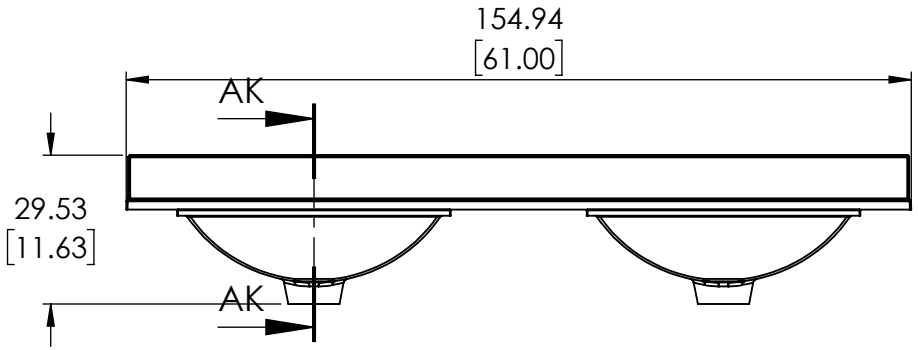

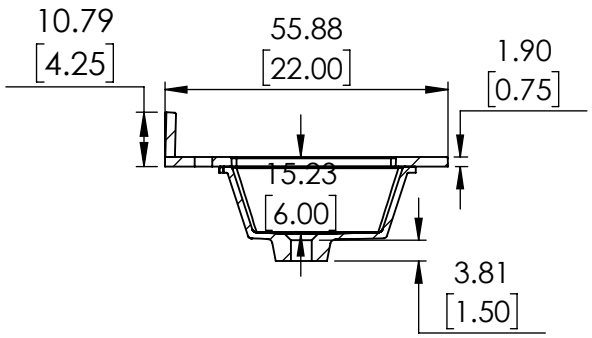

PROPRIETARY AND CONFIDENTIAL

THE INFORMATION CONTAINED IN THIS DRAWING IS THE SOLE PROPERTY OF WOODCRAFTERS. ANY REPRODUCTION IN PART OR AS A WHOLE WITHOUT THE WRITTEN PERMISSION OF WOODCRAFTERS IS PROHIBITED.

UNLESS OTHERWISE SPECIFIED

DIMENSIONS ARE IN MM. AND [INCHES]

TOLERANCES ARE + 0.3175 [.125] - 0.3175 [0.125]

SCALE:1:10

	NAME	DATE
DRAWN	G. REYES	03/11/24
CHECKED	O. RAZO	03/11/24
ENG APPR.	J. GUZMAN	03/11/24
MFG APPR.	V. SANCHEZ	03/11/24

SIZE A | DWG. NO. FG | SHEET 1 OF 2

ITEM TYPE	ITEM ID	ITEM DESCRIPTION	DRAWING STATUS
FG	Reference	Backsplash 61 x 3.5	R&D

REV	DESCRIPTION	DATE	APPROVAL
0	RELEASED	03/11/24	E. SANDOVAL

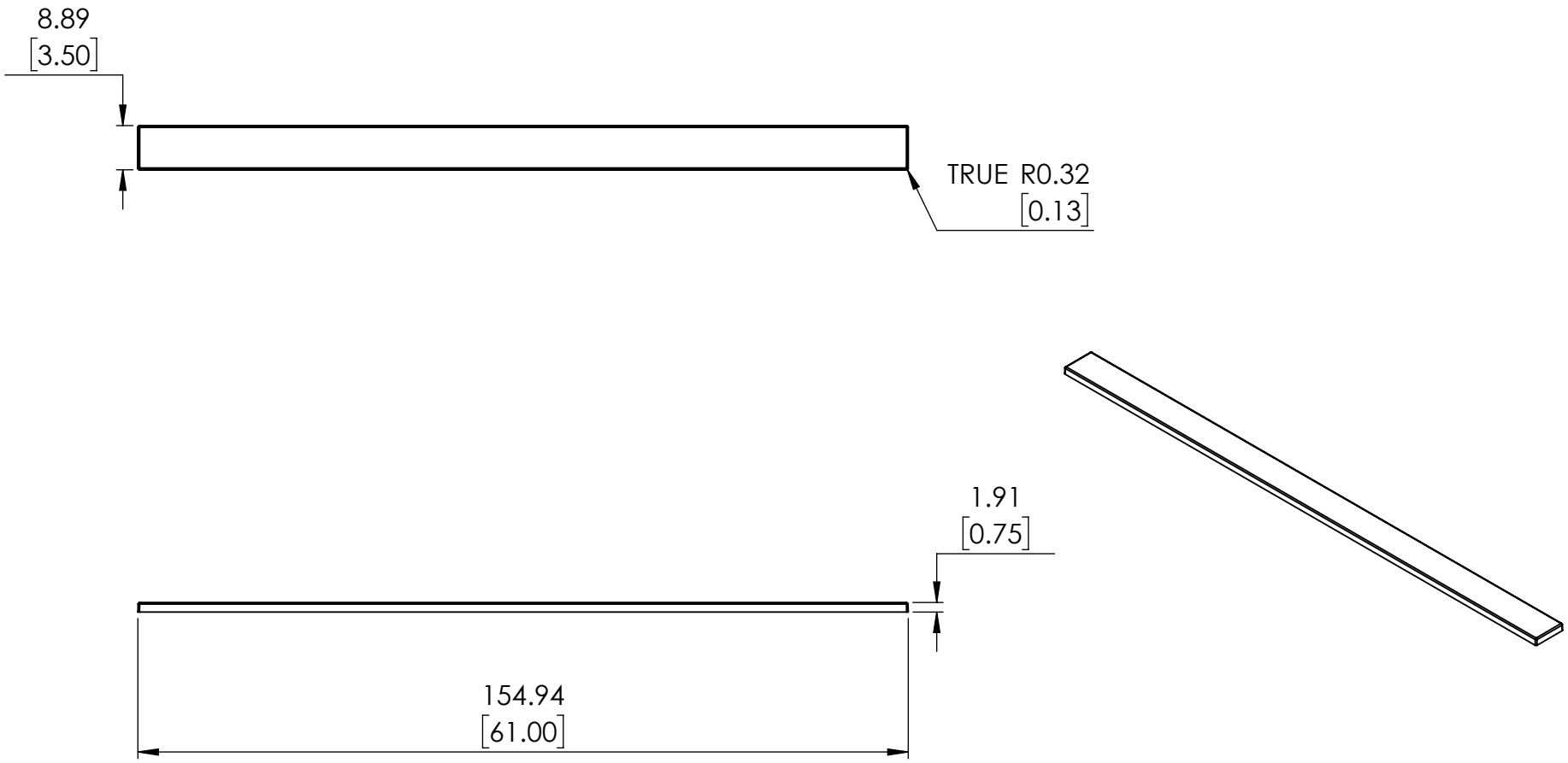

PROPRIETARY AND CONFIDENTIAL

THE INFORMATION CONTAINED IN THIS DRAWING IS THE SOLE PROPERTY OF WOODCRAFTERS. ANY REPRODUCTION IN PART OR AS A WHOLE WITHOUT THE WRITTEN PERMISSION OF WOODCRAFTERS IS PROHIBITED.

UNLESS OTHERWISE SPECIFIED

DIMENSIONS ARE IN MM. AND [INCHES]

TOLERANCES ARE + 0.3175 [.125] - 0.3175 [0.125]

SCALE:1:10

	NAME	DATE
DRAWN	G. REYES	03/11/24
CHECKED	O. RAZO	03/11/24
ENG APPR.	J. GUZMAN	03/11/24
MFG APPR.	V. SANCHEZ	03/11/24

SIZE	DWG. NO.	SHEET 2 OF 2
A	FG	