ABCO48R

48" Solid Concrete Rectangular Countertop Sink

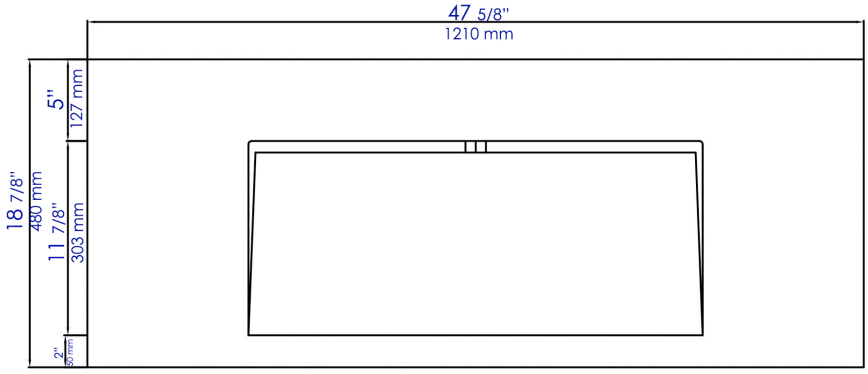

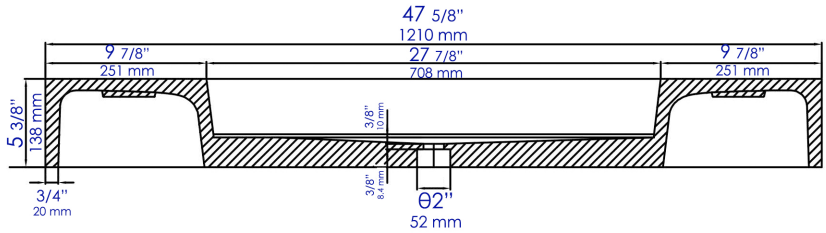

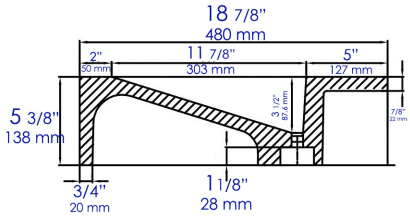

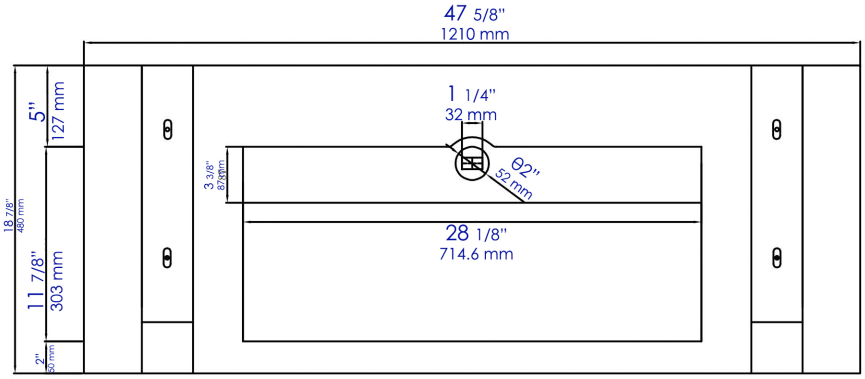

Note: All product dimensions are approximate and should be verified on site prior to installation.
Visit **www.ALFIbrand.com** for more information.

ALFI brand™ All Rights Reserved. This material may not be reproduced, displayed, modified or distributed without the express prior written permission of the copyright holder.