Item Number:A05704A

WARNING (To reduce the risk of fire, electric shock, or personal injury):

1. Please read the instruction carefully and save it as you may need it at a later time.
2. Before you start, **NEVER** attempt any work without shutting off the electricity until the work is done.
   - » Do not turn on the power supply until the installation is finished.

1. Installation place should be clean and dry.
2. Make sure that the installation place can stand the weight of the lamp before installation.
3. Make sure the voltage you are using is **120V**. The maximum wattage is **Type A, Max 60W** per bulb.
4. Keep the lamp away from acidic and alkaline substances in case of damaging the surface of the lamp.
5. When replacing bulbs, you should turn off or unplug the lamp and you must wait until it is cool as bulbs get hot quickly.
6. The safety instructions appearing in this manual are not meant to cover all possible conditions that may occur. It must be understood that common sense, caution and care must be used with any electrical products.

IMAGE FOR FINISHED PRODUCT:

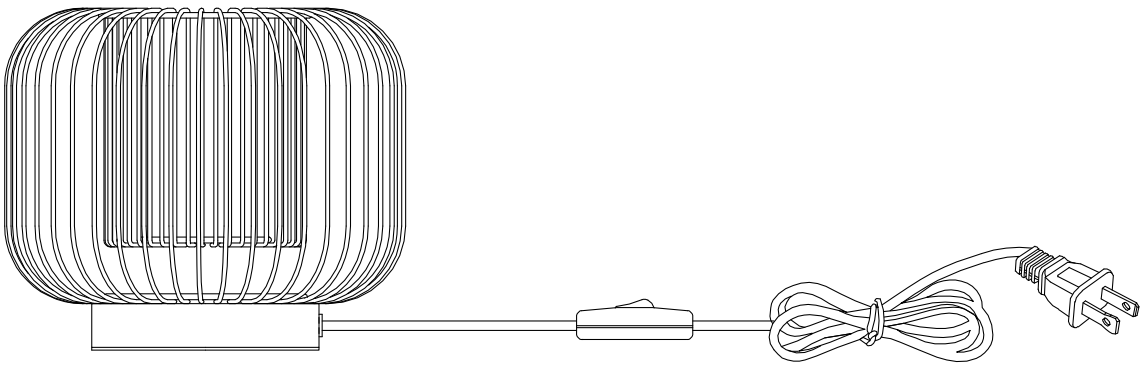

PARTS TYPE & QTY INCLUDING:

(A) Base (1)
(E) Wire (1)

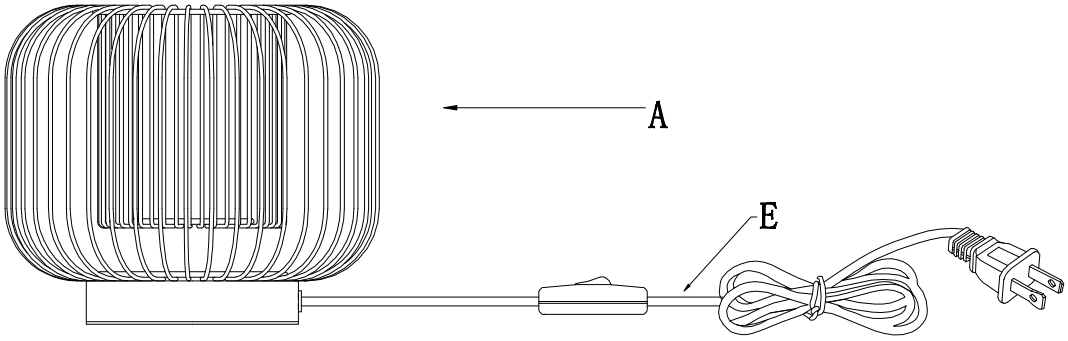

ASSEMBLY & INSTALLATION INSTRUCTIONS:

1. Carefully remove the fixture from the carton and check that all parts and accessories are included as shown in the above illustration.

2. Turn off power

Do not turn on the power supply until the installation is finished.

3 » Install the bulb (not included) (Please do not exceed the maximum wattage recommended on the socket.).

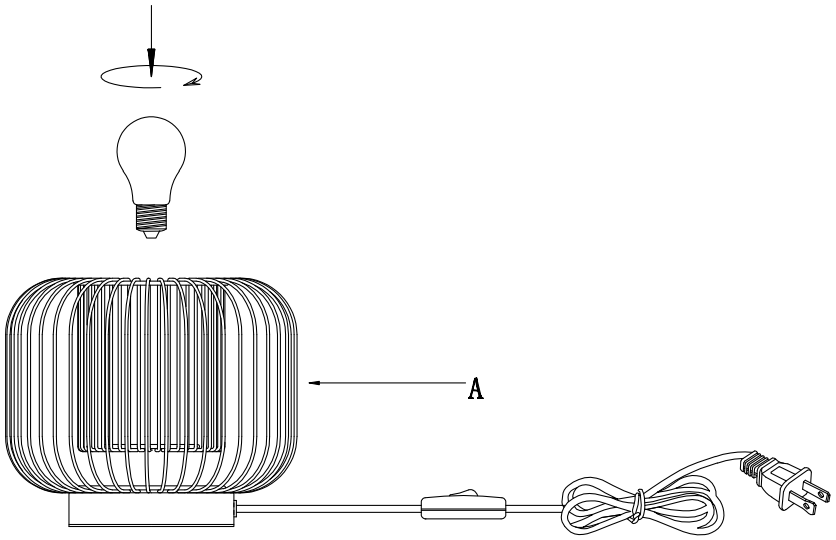

4.Check everything is already installed properly, then you could turn on the light. Enjoy!

ORDERING PARTS

Keep this sheet for future reference in case you need to order replacement parts. All parts for this fixture can be ordered from the place of purchase. Be sure to use exact wording from illustration when ordering parts.

CLEANING

To clean, wipe the fixture with a soft cloth. Do not use abrasive materials such as scouring pads or powders, steel wool or abrasive paper.