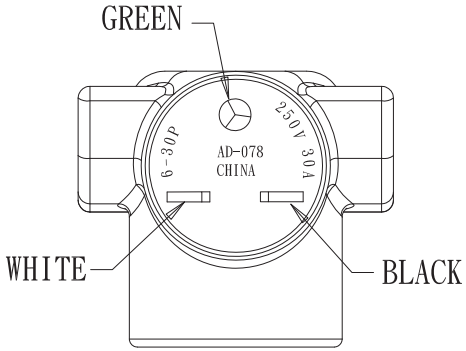

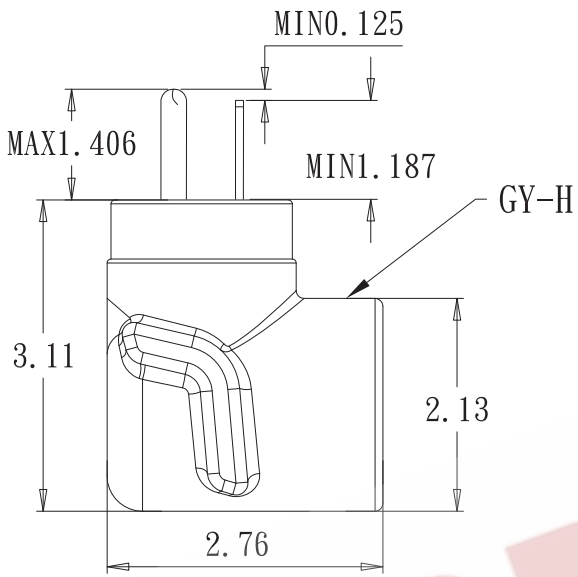

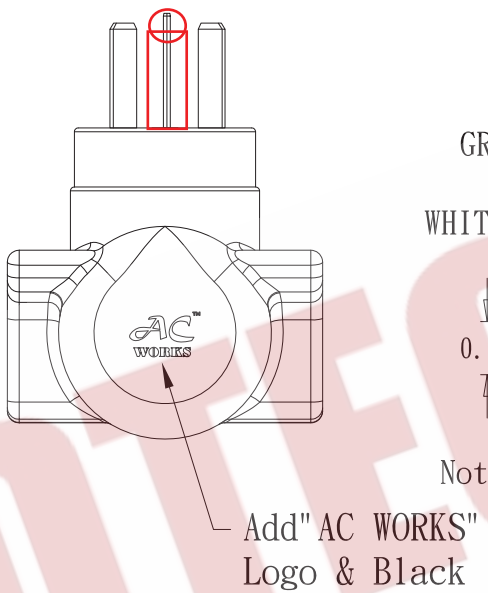

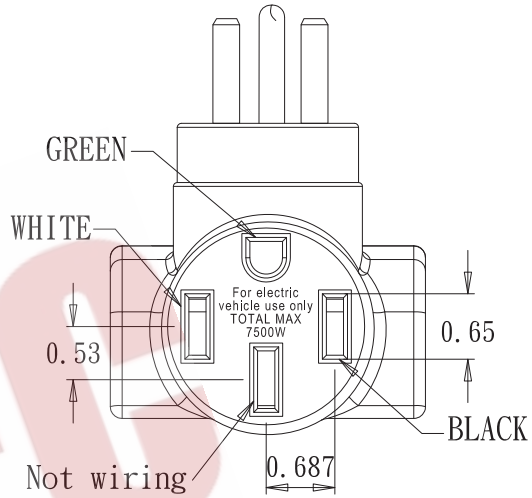

Note：

1. Male and female terminals are nickel plated.
2. Packing：Each product is packaged in sealed bags.
   Use "#" glyphs to separate them and add paper board.

CORDTEC POWER CORPORATION

2018.10.16
ChenTony

Wiring diagram

(Plug)		(Socket)
GREEN	———	GREEN
WHITE	———	WHITE
BLACK	———	BLACK
		Not wiring

No.	Name	Specification
5	Inner frame	PP BLACK
4	Socket of terminal	SP-054 X/Y/W/G Blades
3	Plug of terminal	GEM 98479BL-1;97650ABL-1*2PCS
2	Body of PVC	45P GY-H
1	Inner of cord	8AWG BLACK;WHITE;GREEN

CORDTEC POWER CORPORATION

AC Connectors of Cordtec Power Corp
Main:1-414-434-2220 Fax:1-414-323-8386
Text:1-414-323-3240
Email: Info@CordtecPower.com
Website: CordtecPower.com/ ACWORKS.com

TOLERANCE:
ITEM:EV630MS
DWG NO.:1 of 1
CUSTOMER:Cordtec Power

UNIT	DATE	SCALE	REV	DRAWN	CHECKED	APPROVED
Inch.	2018.10.16		2.0	Alex		