Low Voltage Transformer Instruction

Please read all warning signs and instructions carefully before installation and operation.

1. PACKAGE CONTENTS

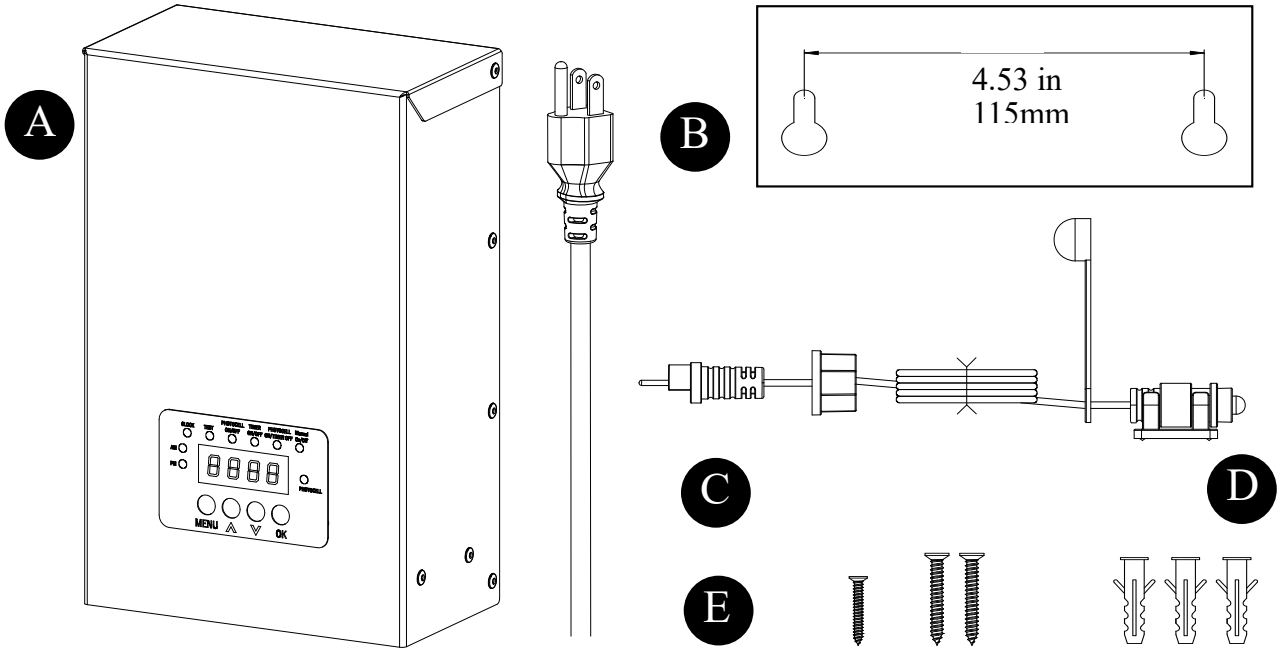

PART	DESCRIPTION	QUANTITY
A	Transformer	1
B	Mounting Template	1
C	Photocell sensor cable	1
D	Photocell Sensor Holder (pre-assembled with sensor cable)	1
E	Mounting fittings	6

2. Product Specifications

- Input Voltage: 120V AC, 60Hz
- Output Voltage: 12V AC / 15V AC
- Max Power Rating: 120W
- Usage: Only for outdoor low- voltage landscape lighting system

3.SAFETY INSTRUCTIONS

⚠ WARNING

To reduce the risk of fire, electric shock and personal injury, please follow the rules below:

a. Do not install within 10 feet (3 m) of pool, spa or fountain.
b. No serviceable parts inside. Do not disassemble the transformer.
c. Do not repair, modify or tamper with power cord and plug.
d. Never submerge the transformer in water.
e. Do not mount on any combustible material.
f. Do not connect multiple transformers in parallel.
g. Do not use with dimmer switch.
h. Plug only into a GFCI protected wet- location outlet.
i. Designed for outdoor landscape low voltage lighting only.
j. Max output is 120W. Total wattage of all connected fixtures shall not exceed 120W.

⚠CAUTION

Installation must comply with local electrical codes and regulations.
If you have installation doubts, please contact a qualified electrician.

4. Lighting Capacity Calculation

This 120W transformer can supply up to 120 watts of landscape lights.
Add up the wattage of all fixtures.
Total cumulative wattage ≤ 120W is required.

5. Wiring Method

This transformer is suitable for indoor and outdoor use.
Two wiring options:

5.1 Straight Method

Run low- voltage cable in a straight line and connect fixtures one by one.

- The farther the fixture, the more obvious the voltage drop, and the dimmer the light.
- The first fixture must be at least 10 ft away from transformer.
- Voltage drop is obvious when cable length over 100 ft. Voltage Drop Solutions

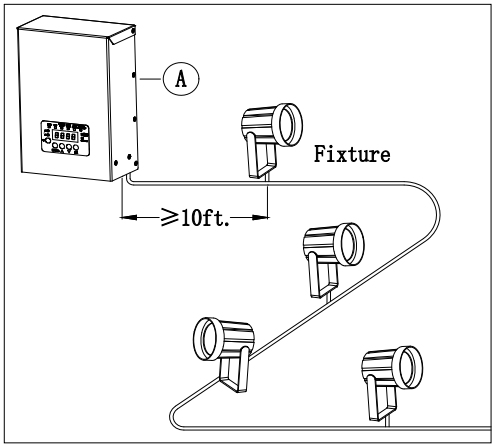

Voltage Drop Solutions

CORRECTIVE ACTION	
Modify wire size.	Thicker gauge wire can carry more voltage. For example, you may experience more voltage drop with an 16 AWG than with a 12 AWG wire.
Change wiring method.	Using the looping method can boost voltage. (Refer to 1b on the next page.)

5.2 Looping Method

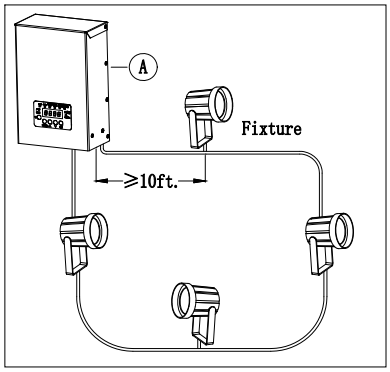

Route the cable as a loop, connect both ends back to the corresponding terminal blocks.

- Effectively reduce voltage drop.
- Do not cross wires; looped wires must connect to the same terminal.

5.3 Recommended Wire Gauge Table

12 Volt Transformer Terminal		
Cable Length	Total Fixture Wattage	Wire Gauge
100ft	0-60	16
	61-120	14
	121-200	12
	201-300	Not Recommended
150ft	61-120	14
	121-200	12
	201-300	Not Recommended

15 Volt Transformer Terminal		
Cable Length	Total Fixture Wattage	Wire Gauge
100ft	1-120	16
	121-240	14
	241-300	12
150ft	61-120	14
	121-200	12
	201-300	Not Recommended

Note: If cable length exceeds 150ft, please use looping wiring method.

- Total load of 12V + 15V terminals shall not exceed 120W.

6. Installation Steps

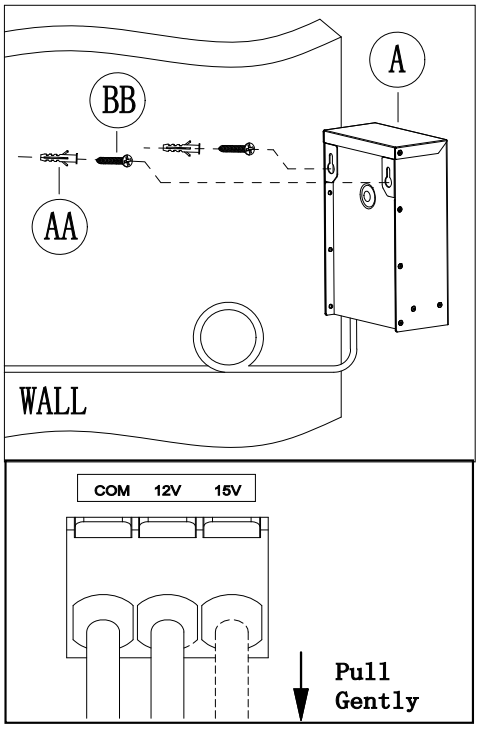

Step 1 Mount the Transformer

1. Use mounting template to mark screw positions.
2. Install wall anchors and screws.
3. Hang transformer via rear buttonhole slots.
4. Recommended mounting height: 12~48 inches (0.3~1.2m) above ground.

Step 2 Place Fixtures and Route Cable

1. Arrange light fixtures at desired positions.
2. Ensure total wattage ≤ 120W.
3. Coil and store extra cable after the last fixture.

Step 3 Connect Cable to Transformer

1. Strip 1/2 inch insulation from wire ends, wire into terminal hole and lock firmly.
2. Plug transformer cord into 120V GFCI wet location outlet.
3. Turn on the transformer, lights will light up once connected correctly.

Terminal definition: Common (COM),12V, 15V.
One wire of each cable must connect to COM.
Insulate all unused leads.

Step 4 Photocell sensor Installation Selection

1. If the installation position has direct sunlight all day: no need to install external photocell sensor cable.
2. If the position is shaded without direct sunlight: must install external photocell sensor cable.

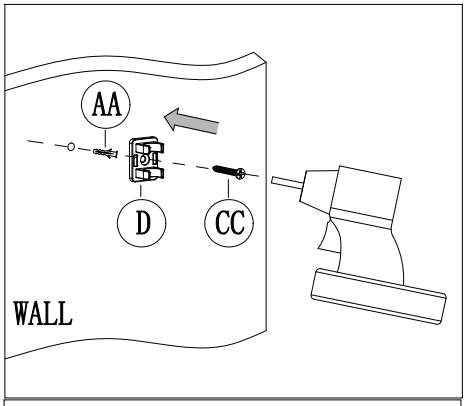

Note:

Built-in photocell sensor (Internal PT) works when external cable is disconnected. External photocell sensor (External PT) will override built-in one once plugged in.

Step 5 Install External Photocell Sensor cable

1. Select a location with full direct sunlight.
2. Avoid places affected by street lights or artificial light.
3. Use 1/4-inch drill bit to drill hole, install wall anchor.
4. Fix sensor holder with screws.
5. Plug photocell cable into transformer sensor socket.
6. Tighten the plastic cover clockwise.
7. Place sensor into holder.

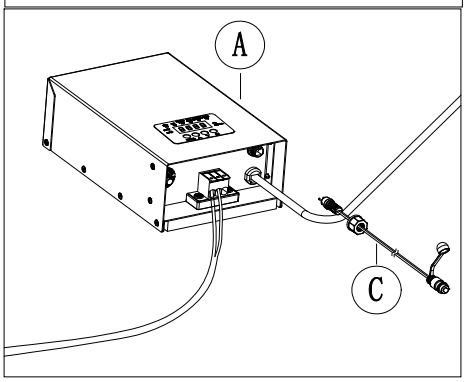

7. Operating Instructions

7.1 CLOCK Function

a. Press the MENU button, select "Clock", and press "OK" to Confirm, and you can set the time.

b. Press the ∧ button and ∨ button to set AM/PM, hour, and minute in equence to the correct time.

Press the OK button to confirm after each step.

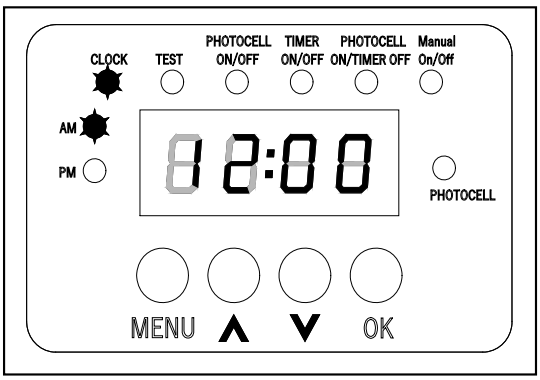

7.2 TEST Mode

a. Press the MENU button , select "TEST", and press "OK" to confirm.

b. Cover photocell completely , lights turn on.

C. Remove cover, lights turn off.

7.3 PHOTOCELL ON/OFF Mode

a. Auto ON at dusk, auto OFF at dawn.

b. Press the MENU button, select "PHOTOCELL ON/OFF", and press "OK" to confirm.

c. Lights will turn off within 30 seconds when sunlight hits the sensor.

7.4 TIMER ON/OFF Mode

a. Press the MENU button, select"TIMER ON/OFF", and press "OK" to confirm.

b. Press the ∧ button and ∨ button to set ON,hour, minute，OFF, hour, and minute in sequence to the desired ON time and OFF time.

Press the OK button to confirm after each step.

c. The transformer will turns on and off according to the set time.

7.5 PHOTOCELL ON / TIMER OFF Mode

a. Press the MENU button, select "PHOTOCELL ON / TIMER OFF", and press"OK" to confirm.

b. Press the ∧ button and ∨ Button to set OFF, hour, and minute in sequence to the desired OFF time.
Press the OK button to confirm after each step.

c. The transformer automatically turns on at night and turns off automatically when the set time is reached.

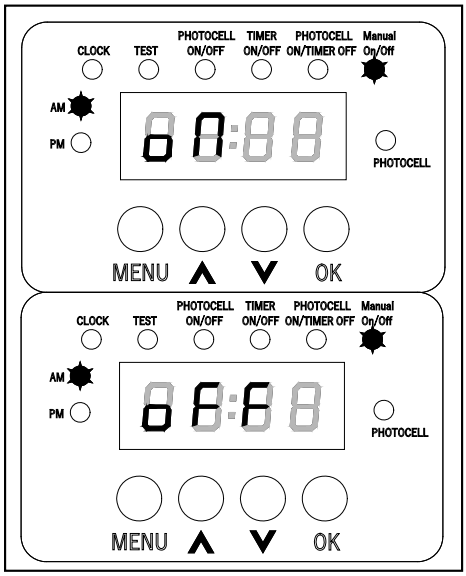

7.6 MANUAL ON/OFF Mode

a. Press the MENU button, select "MANUAL ON/OFF", and press"OK" to confirm.

b. Press the ∧ button , to turn on the transformer, Press the ∨ button to turn off the transformer.

7.7 Power-off Memory Function

The transformer retains all settings after power off.

TROUBLESHOOTING

⚠ **WARNING:** Unplug power before inspection to avoid electric shock.

PROBLEM	POSSIBLE CAUSE	CORRECTIVE ACTION
All Lights not turning on	1. Poor cable connection 2. No power supply 3. Overloaded wattage 4. Wrong mode setting 5. Cable short circuit	1. Reconnect terminals tightly 2. Check GFCI outlet power 3. Reduce total fixture wattage 4. Reset to correct mode 5. Inspect whole cable for short
Only some Lights work .	1. Bad connector contact 2. Light bulb burned out	1. Ensure connector pins touch inner copper wire 2. Replace damaged bulbs
Lights flicker	1. Photocell senses artificial light(street lights, reflection from light source, etc.) 2. Long cable causing voltage drop	1. Relocate sensor away from artificial light(street lights, reflection from light source, etc.) 2. Use thicker wire or looping method
Lights cannot turn off in "Dusk to Dawn" mode or" Dusk ON Timer OFF" mode during the day time.	Photocell sensor covered or dirty	Clean sensor, remove shelter, ensure direct sunlight
Lights won't turn on at dusk	Photocell sensor disturbed by artificial light (street lights, reflection from light source, etc.).	Move the Photocell sensor to a position not facing the artificial light source (street lamp, light source reflection, etc.)

8. Care and Maintenance

a. Unplug the transformer before cleaning.
b. Clean with dry or slightly damp soft cloth.
c. Do not use chemical cleaner, solvent or abrasive materials.
d. Keep the transformer dry and away from water immersion.

9.Frequently Asked Questions

Q1: Can I use a smart plug?
A: Yes. The transformer remembers the previous mode after power is restored.
Q2: Can it be used outdoors?
A: Yes. It is designed for outdoor landscape lighting systems.
Q3: Can I use this transformer with a dimmer switch?
A:No. This transformer is not compatible with any dimmer switch.
Q4: Why are my landscape lights dim further from the transformer?
A:This is caused by voltage drop.
Solutions:
1.Use thicker gauge wire (12AWG instead of 16AWG)
2.Change from straight wiring to looping wiring method
3.Shorten the cable run length
Q5: What is the difference between Straight Wiring and Looping Wiring?
A:Straight Method: Simple one-way run; easy installation but may have voltage drop on long runs.
Looping Method: Cable loops back to the transformer terminals; greatly reduces voltage drop for longer wire runs.
Q6: Do I need to install the external photocell sensor cable?
A:If the transformer mounting spot gets direct sunlight all day: Not required, built-in photocell works automatically.
If the spot is shaded with little direct sunlight: Must install the external photocell cable.
Q7: Will the external photocell override the built-in one?
A:Yes. When the external photocell cable is plugged in, it automatically takes
priority. If the external cable is damaged, the unit will auto-switch back to the internal built-in photocell.