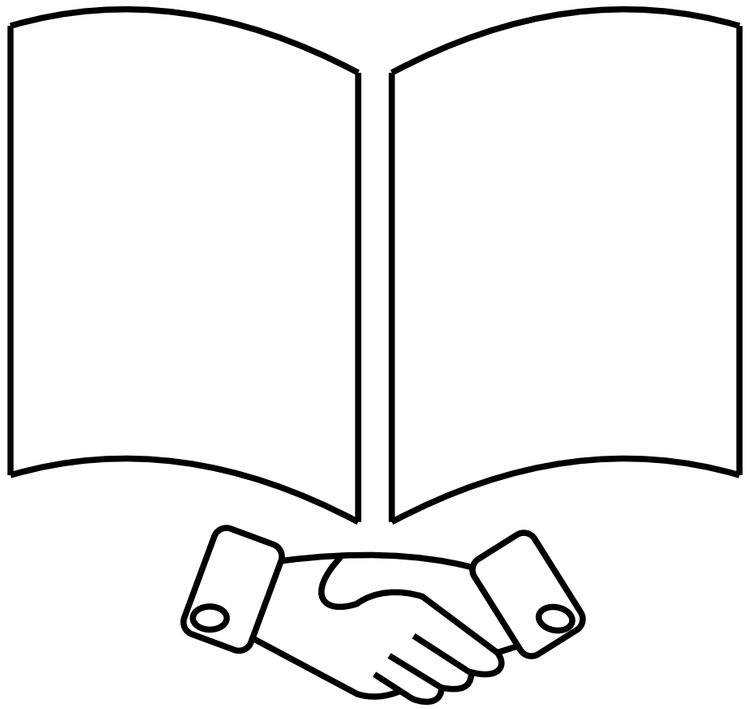

Congratulation on your purchase.

Questions and concerns about your our product ?

You can contact us, we are happy to serve you to your satisfaction!

KIDS DESK



INSTRUCTION MANUAL

AFTER SALES SUPPORT

Before you begin

1.Check for damaged or missing parts

2.Gather all tools prior to assembly.

3.Use the assembly, surface to prevent product damage during assembly.

4.Do not over tighten.

5. During assembly,as this may damage the product. Do not use power tools.

Care Instruction

1.Wipe clean with damp cloth

2.Do not use strong detergents or abrasive cleaners, they may damage the surface

3.Check and tighten screws regularly

4.Do not stand on the product, do not use the product as a stepladder

5.Do not put anything hot on the surface.

6.Indoor use only.

7.Questions and concerns about your BALANBO product ? Send email to alanbo@balanbo.com

Part List

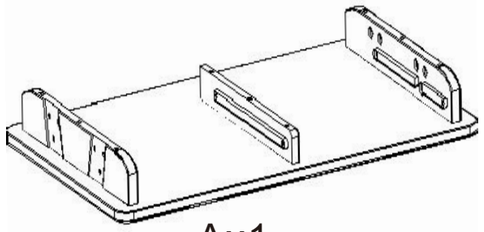

Ax1

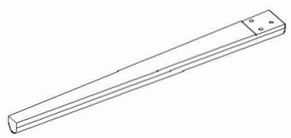

Bx2

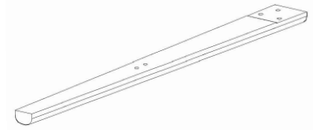

Cx2

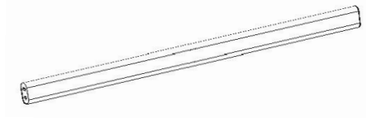

Dx1

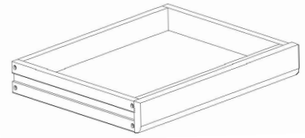

Ex2

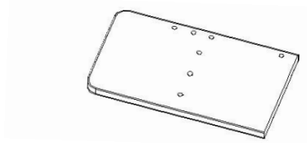

Fx1(L）

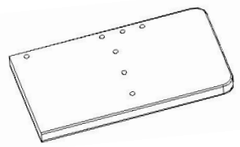

Gx1（R）

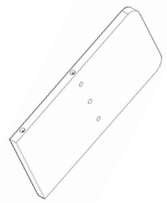

Hx1

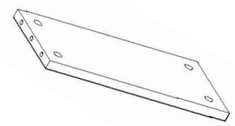

Ix1

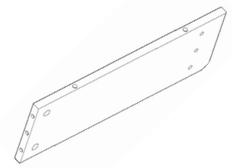

Jx1

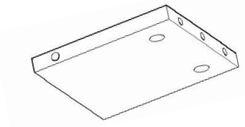

Kx1

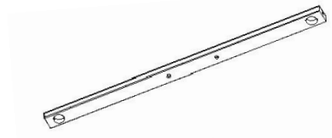

Lx1

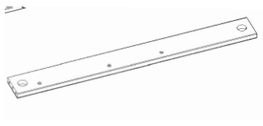

Mx1

Hardware List

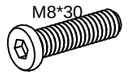

❶ x12

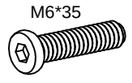

❷ x4



❸ x16

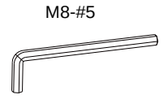

❹ x1

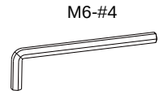

❺ x1



❻ x4



❼x4



❽x4



❾x1



❿x8



⓫x8



⓬x2



⓭x7



⓮x1



⓯ x1

Assembly

STEP1

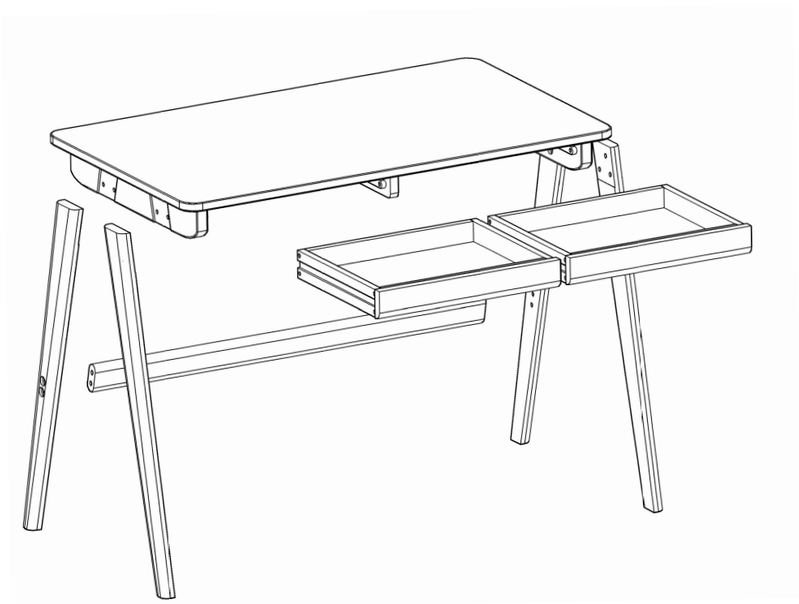

STEP2

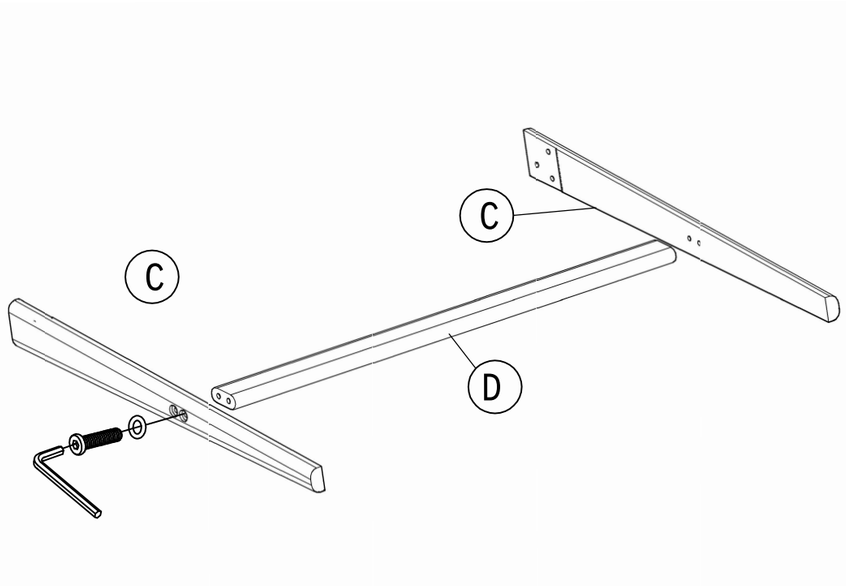

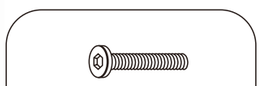

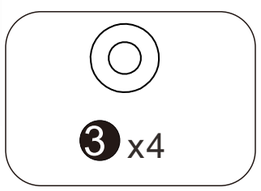

STEP3

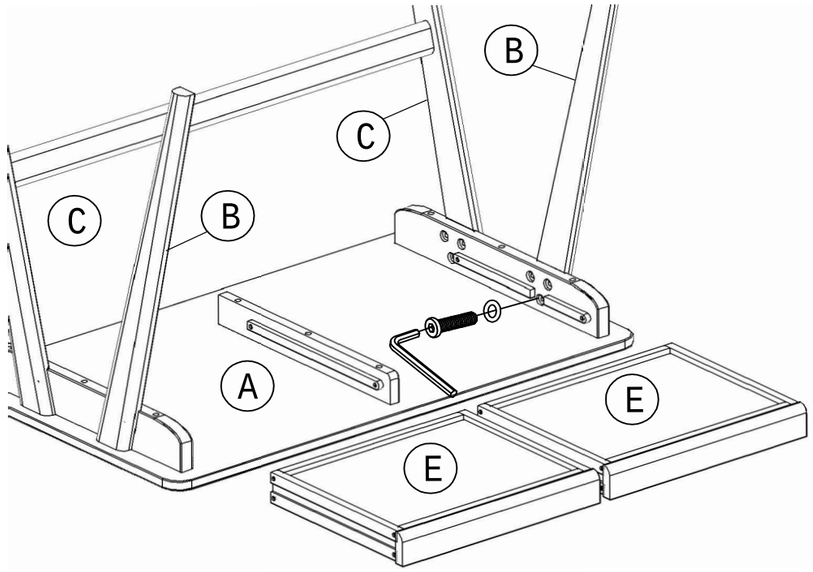

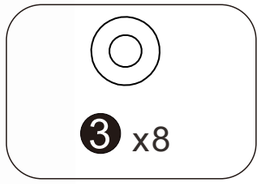

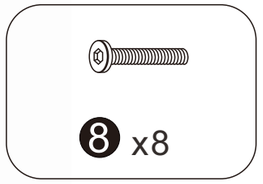

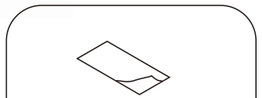

STEP4

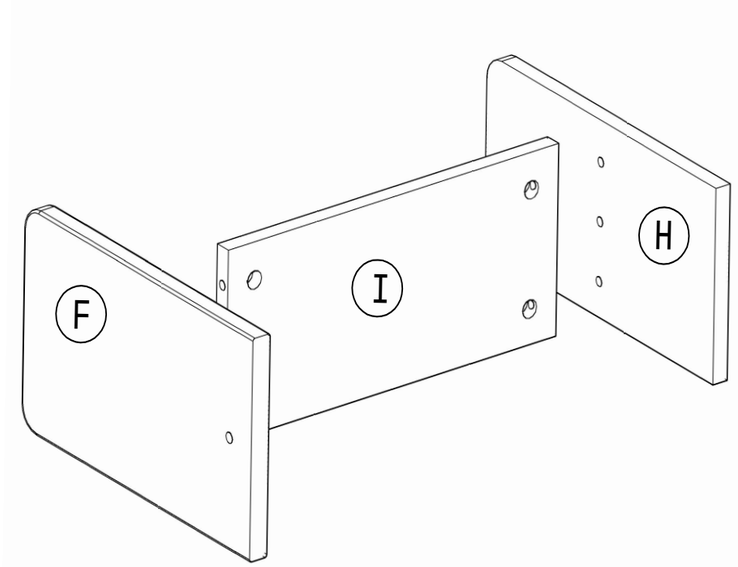

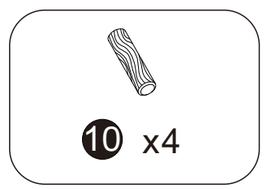

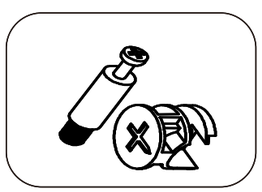

STEP5

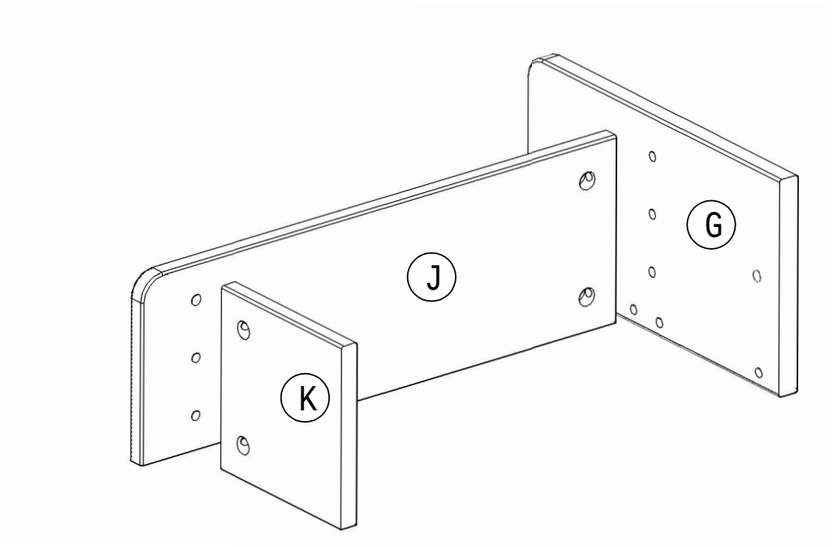



10 x4



11 x4

STEP6

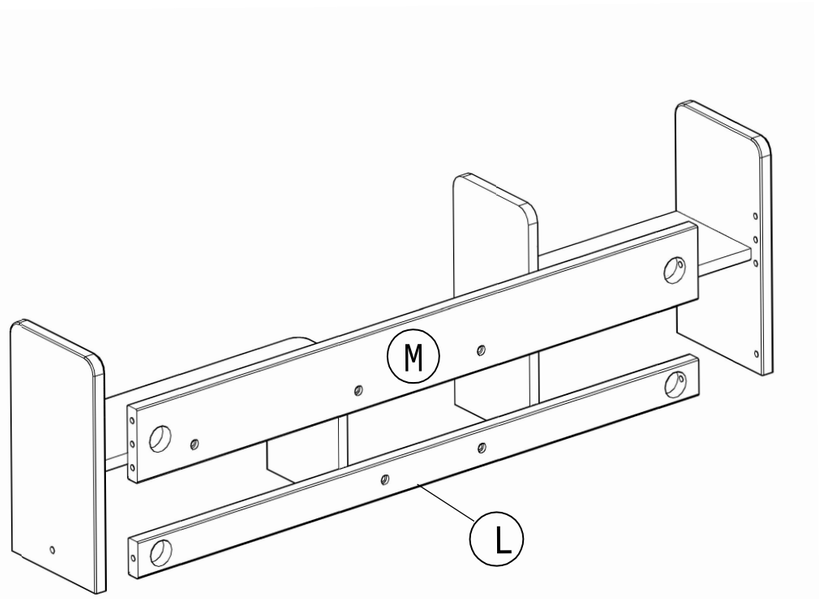

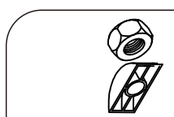

2 x4



2 x4

STEP7

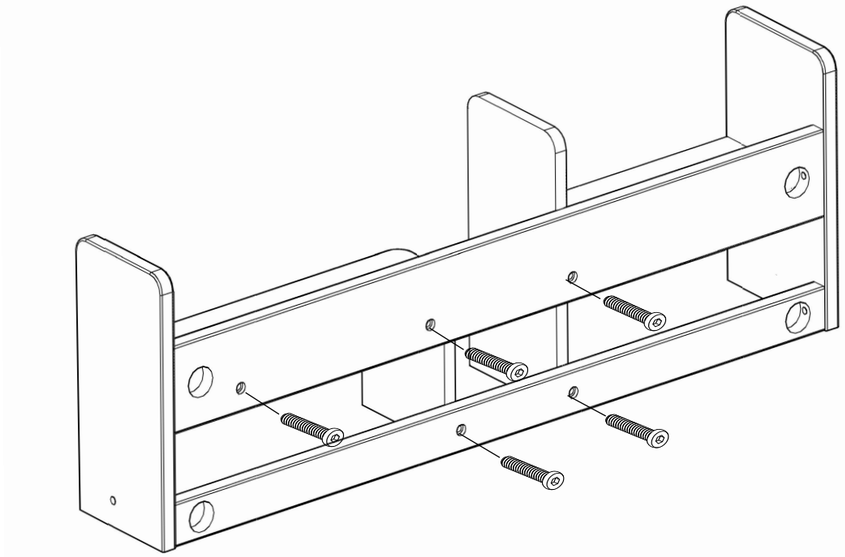

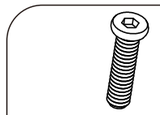

M6*30

13 x5

STEP8

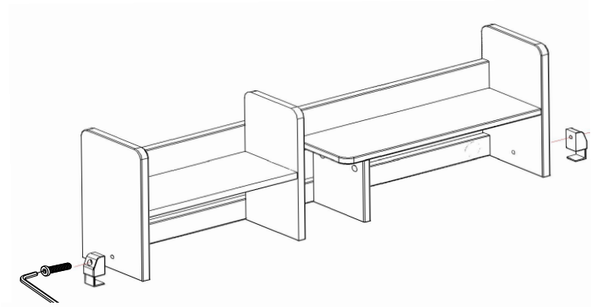

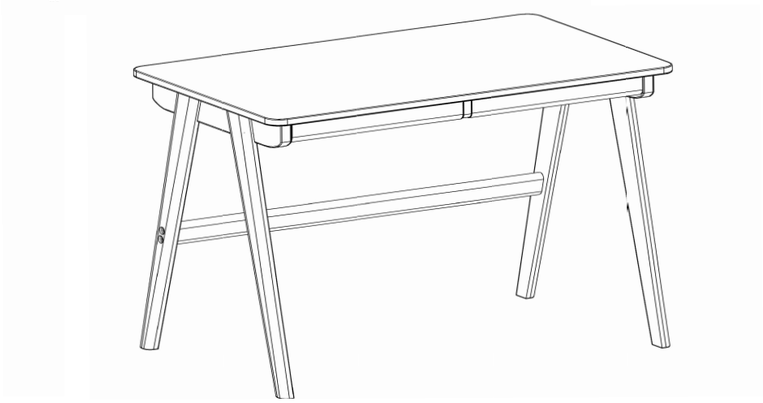

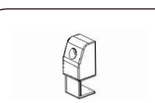

12 x2



M6*30

13 x2