Brazn® | K-21056

16-1/4" square undermount bathroom sink

Features

- Brass drain and color-matched brass drain cover
- With overflow
- Square basin
- No faucet holes; requires counter-mount faucet with lift rod



Available Colors/Finishes

Color tiles intended for reference only.

0 White

1-800-4KOHLER (1-800-456-4537)
Kohler Co. reserves the right to make revisions without notice to product specifications.
For the most current specification sheet, go to www.kohler.com USA or www.kohler.ca Canada.
8-10-2026 17:13 - US-CA

Codes/Standards

ADA, OBC, CSA B651 compliant when installed to the specific requirements of these regulations.

ADA CSA B651 OBC

ASME A112.19.2/CSA B45.1
ADA
ICC/ANSI A117.1
CSA B651
OBC

Technical Information

With Overflow:	Yes
Drain Hole Diameter:	1-3/4" (45 mm)
Basin Configuration:	Single Bowl
Basin Length:	13-7/8" (352 mm)
Basin Width:	13-7/8" (352 mm)
Basin Depth:	5-1/8" (130 mm)

Material

- Vitreous china

Warranty

See website for detailed warranty information.

KOHLER® Vitreous China Bathroom Sink Lifetime Limited Warranty

1-800-4KOHLER (1-800-456-4537)
Kohler Co. reserves the right to make revisions without notice to product specifications.
For the most current specification sheet, go to www.kohler.com USA or www.kohler.ca Canada.
8-10-2026 17:13 - US-CA

THE BOLD LOOK OF KOHLER.

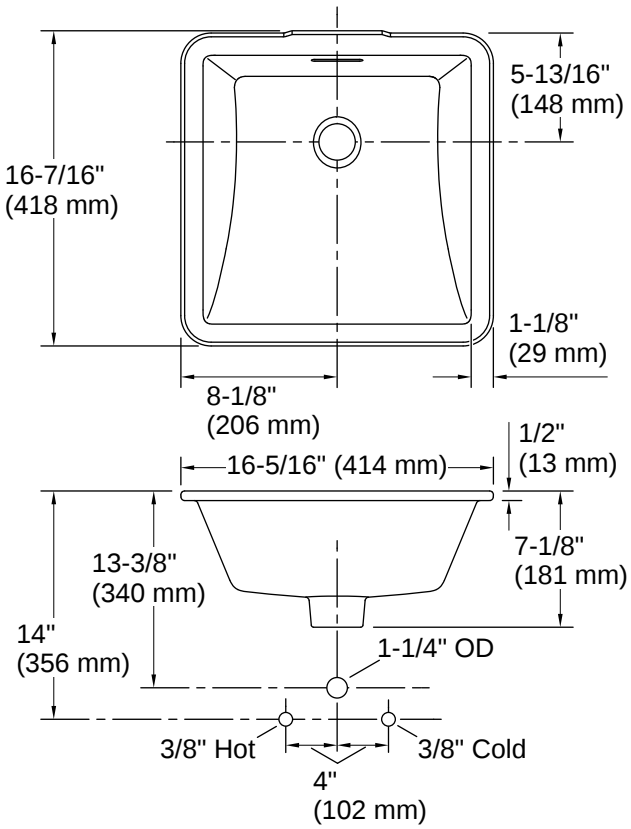

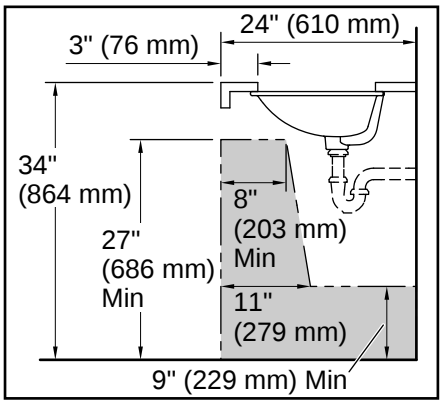

Recommended ADA Installation

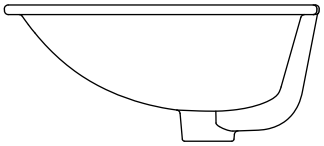

Installation

- Undermount

Installation Notes

Install this product according to the installation instructions.

NOTICE: Countertop manufacturer or cutter must use the cut-out template provided with the product, or a current one provided by Kohler Co. (call 1-800-4-KOHLER). Kohler Co. is not responsible for cutout errors when the incorrect cut-out template is used.
Product dimensions are nominal and may vary per ASME A112.19.2 tolerances.
ADA, OBC, CSA B651 compliant when installed to the specific requirements of these regulations.

1-800-4KOHLER (1-800-456-4537)
Kohler Co. reserves the right to make revisions without notice to product specifications.
For the most current specification sheet, go to www.kohler.com USA or www.kohler.ca Canada.
8-10-2026 17:13 - US-CA

THE BOLD LOOK OF KOHLER.