DREAMLINE®
dream in style

MODEL INFORMATION

FSTLW2863

LUNA 63 X 28

FREESTANDING BATHTUB

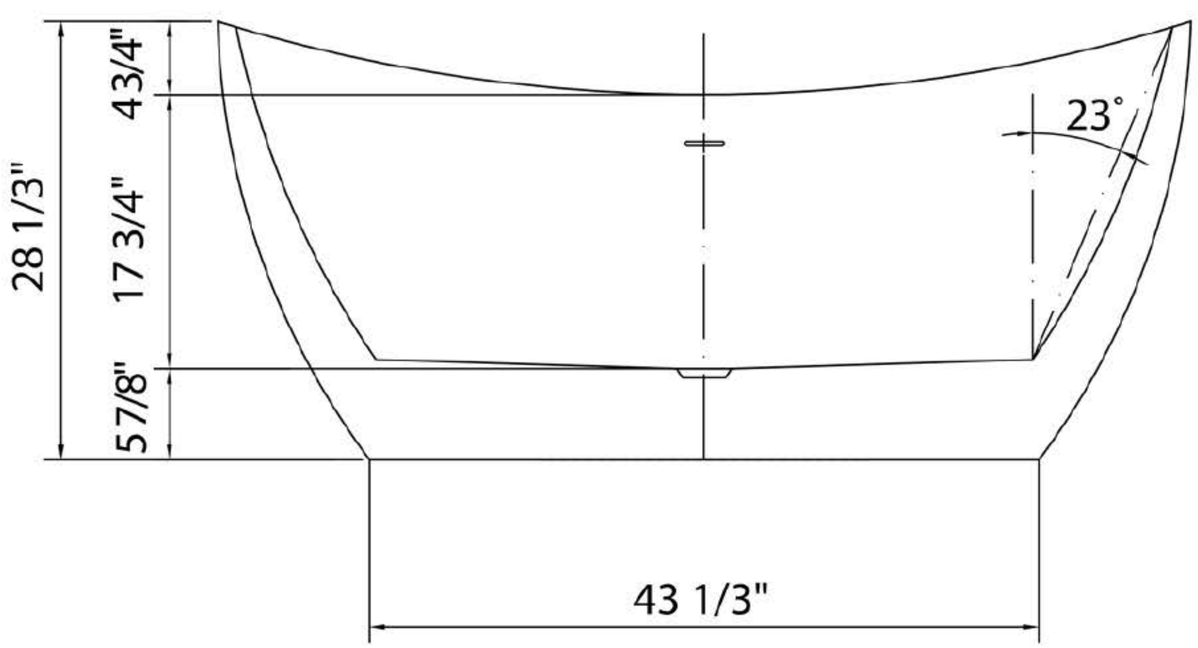

FRONT VIEW

SIDE VIEW

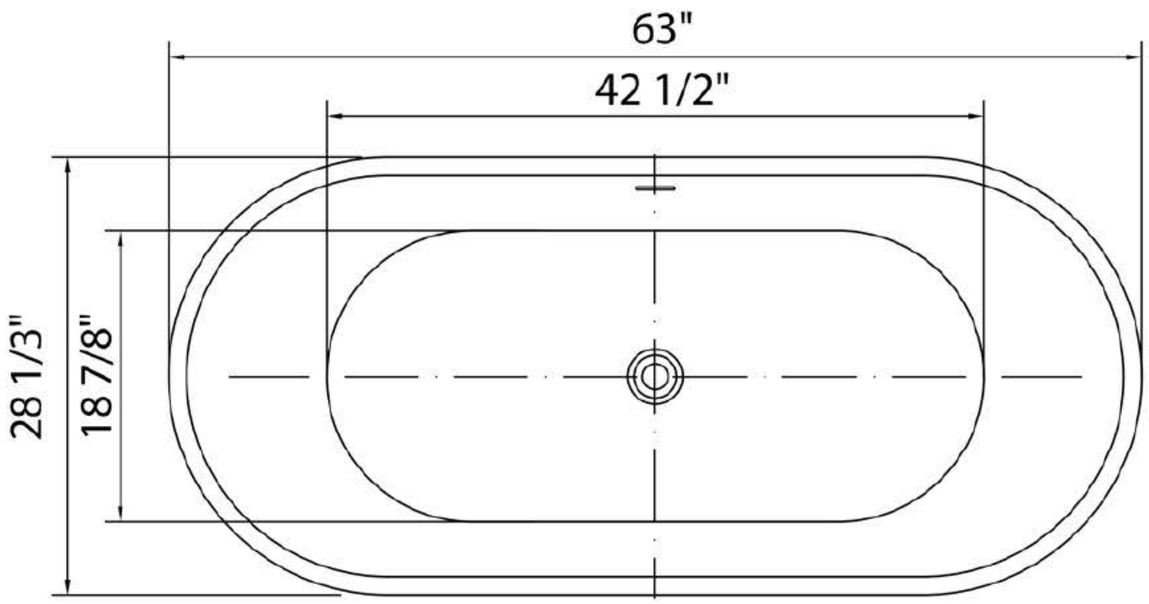

TOP VIEW

Volume: 48 gal Weight: 66 lbs

DreamLine reserves the right to update or modify the hardware or materials pictured without prior notice for the purpose of product improvement and customer satisfaction.

© DreamLine. All rights reserved.