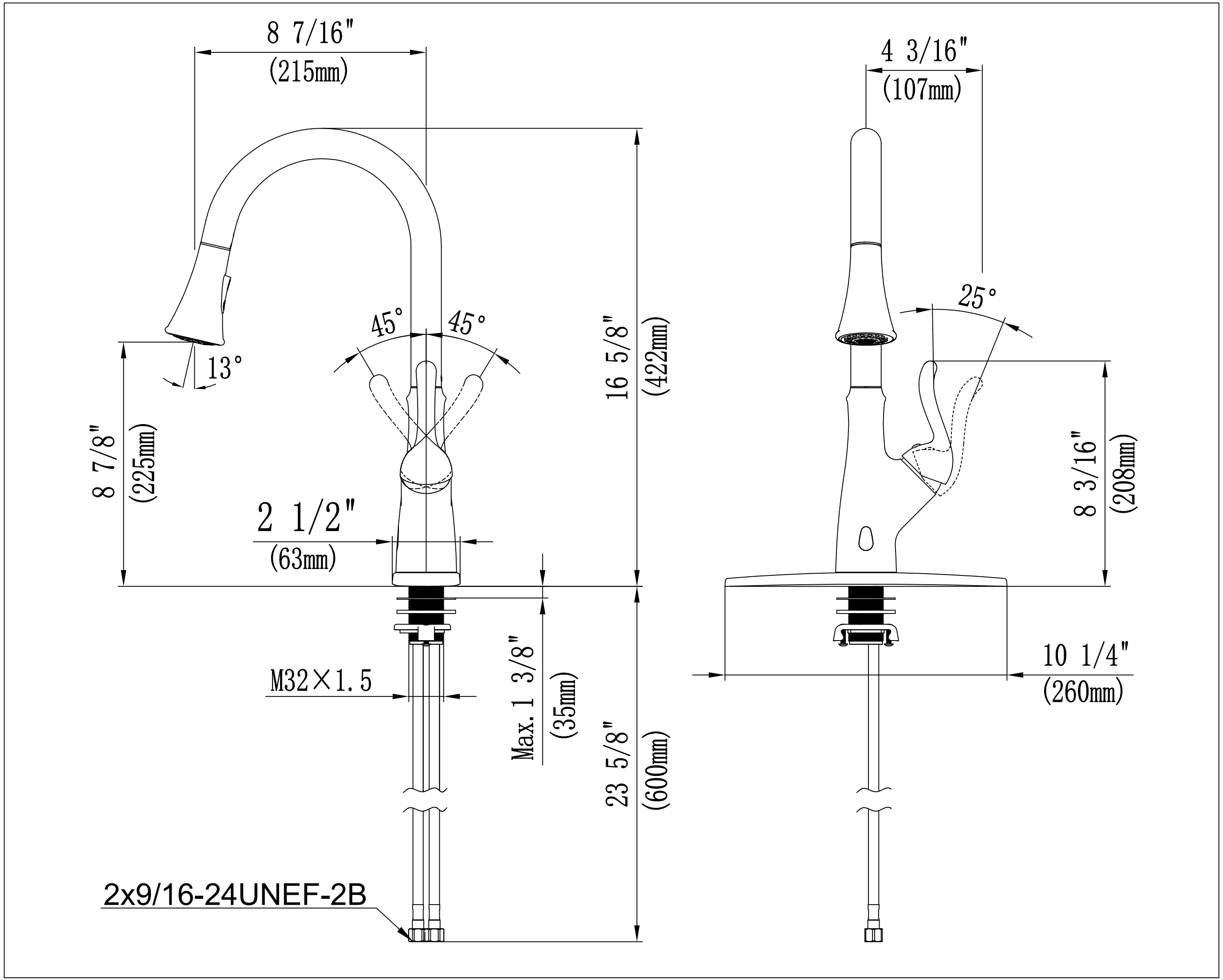
8 7/16"
(215mm)
4 3/16"
(107mm)
45°
45°
13°
25°
16 5/8"
(422mm)
8 7/8"
(225mm)
8 3/16"
(208mm)
2 1/2"
(63mm)
10 1/4"
(260mm)
M32×1.5
Max.1 3/8"
(35mm)
23 5/8"
(600mm)
2x9/16-24UNEF-2B