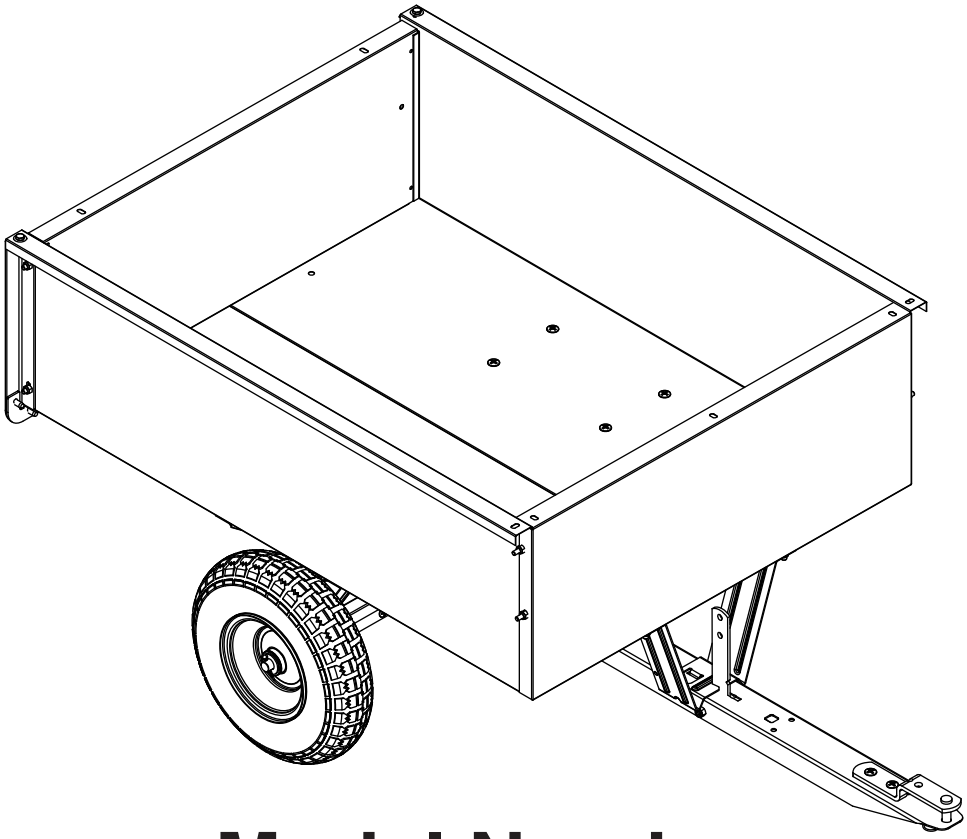

Model Number
45-03038

967 02 71-01

Scan for Assembly Instructions and More!

Video Instruction Guide

PRINTED IN USA

FORM NO. 45841 (02/27/26)

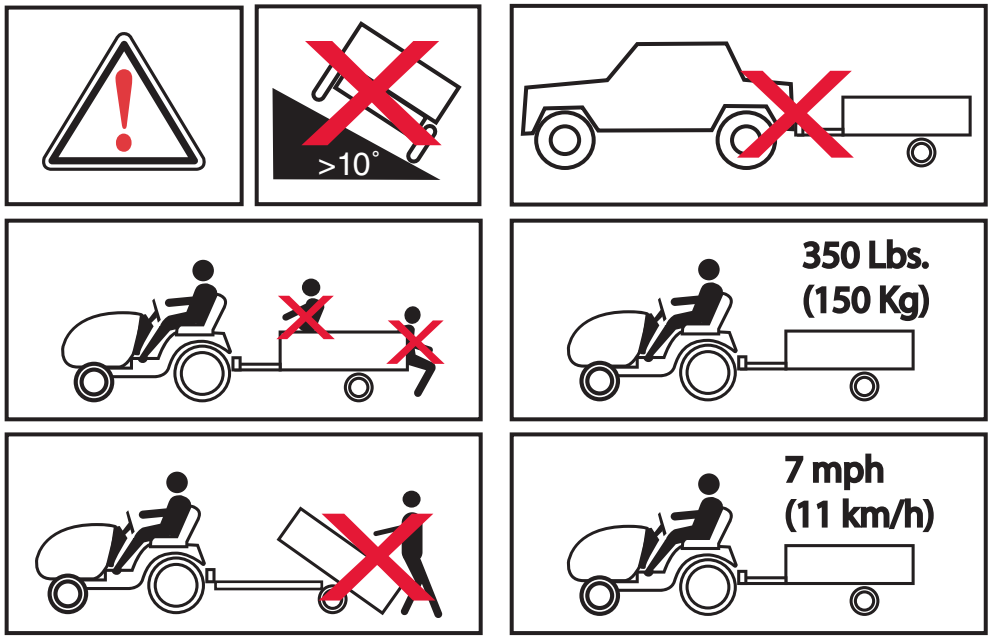
>10°
350 Lbs.
(150 Kg)
7 mph
(11 km/h)

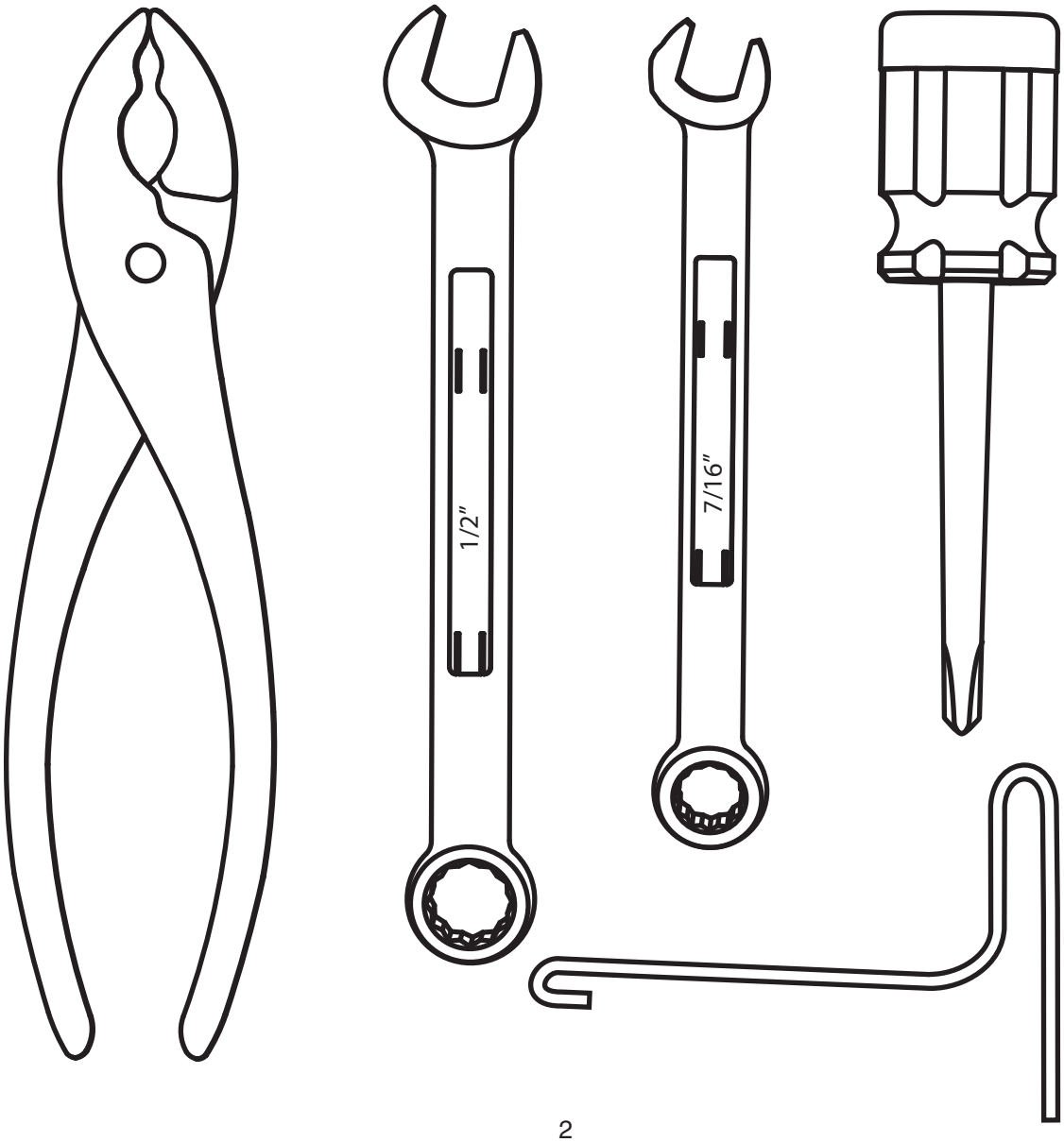
1/2"
7/16"

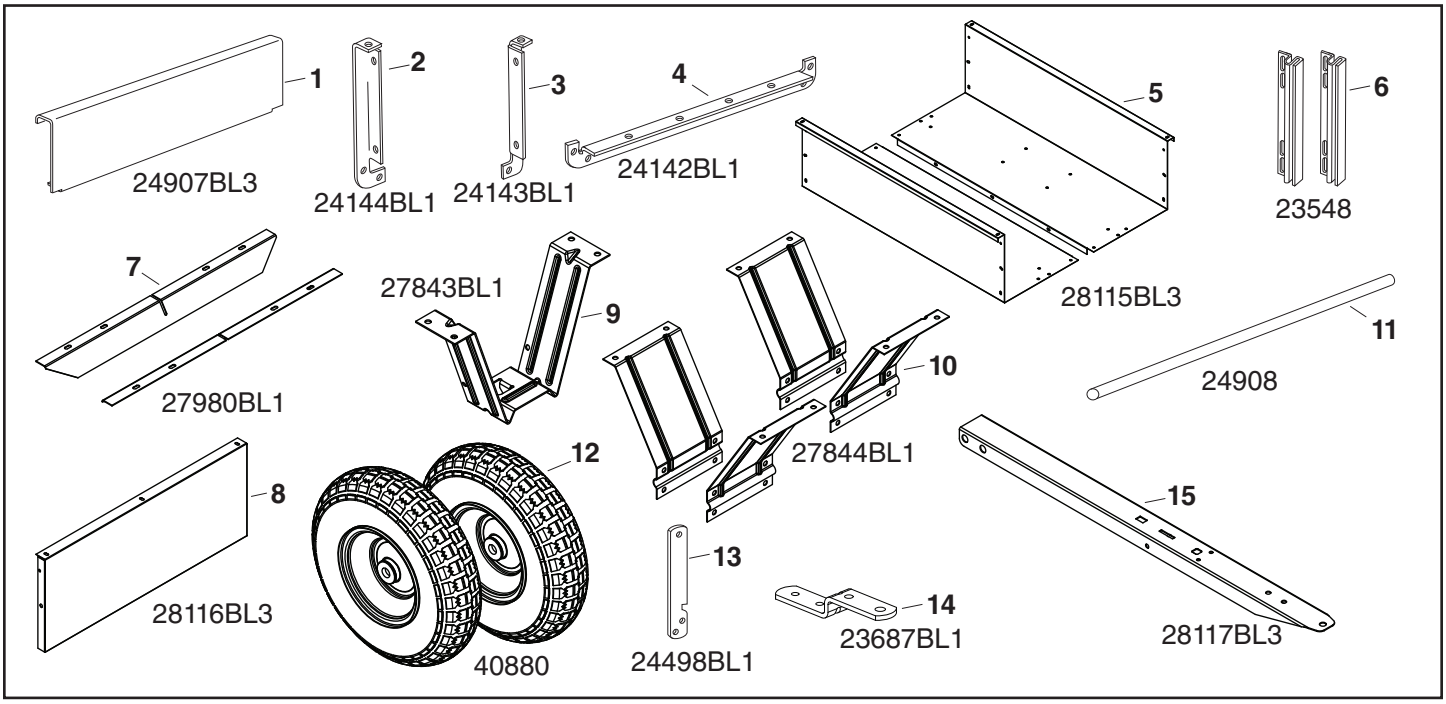
1
24907BL3
2
24144BL1
3
24143BL1
4
24142BL1
5
28115BL3
6
23548
7
27980BL1
27843BL1
9
10
27844BL1
11
24908
8
28116BL3
12
40880
13
24498BL1
14
23687BL1
15
28117BL3

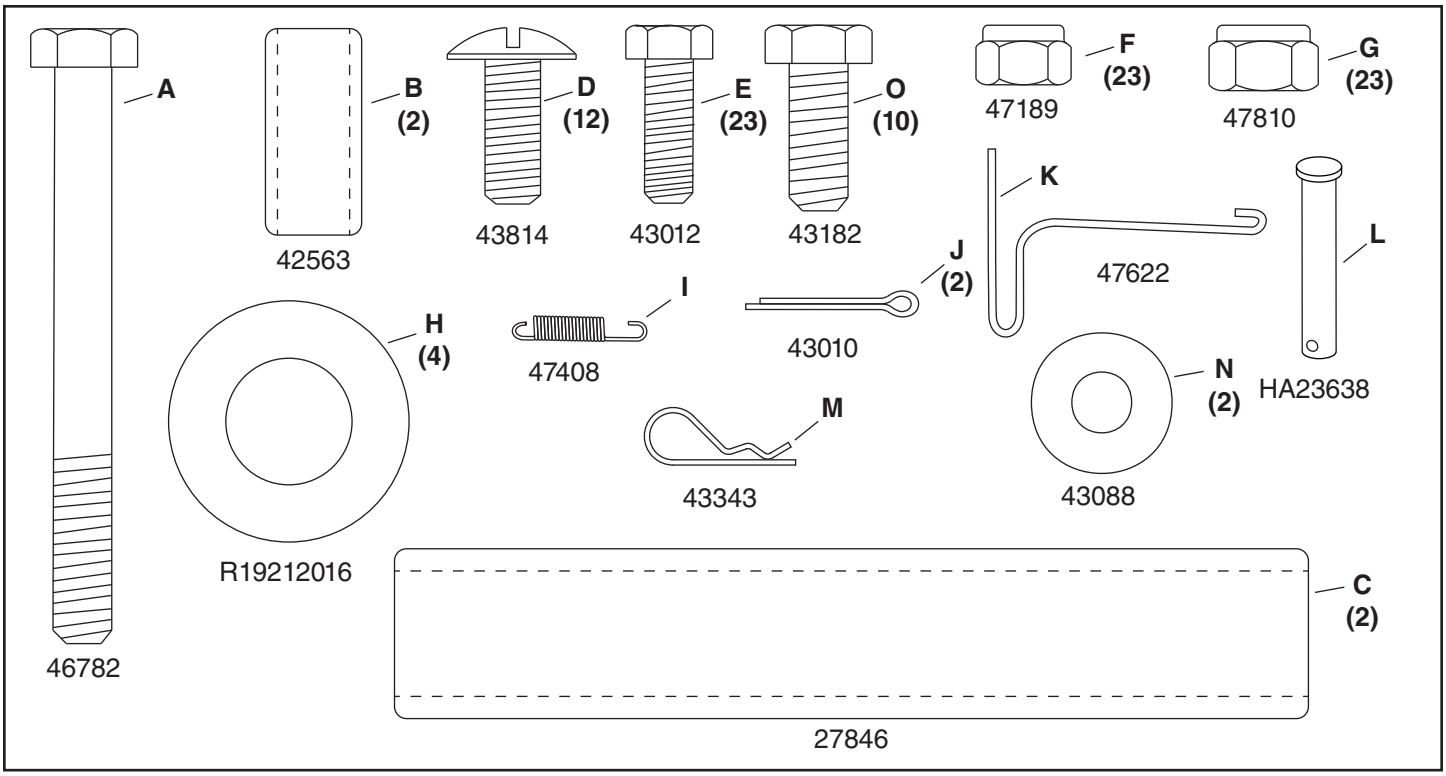
A
46782
B
(2)
42563
D
(12)
43814
E
(23)
43012
O
(10)
43182
F
(23)
47189
G
(23)
47810
K
47622
L
HA23638
J
(2)
43010
I
47408
H
(4)
R19212016
M
43343
N
(2)
43088
C
(2)
27846

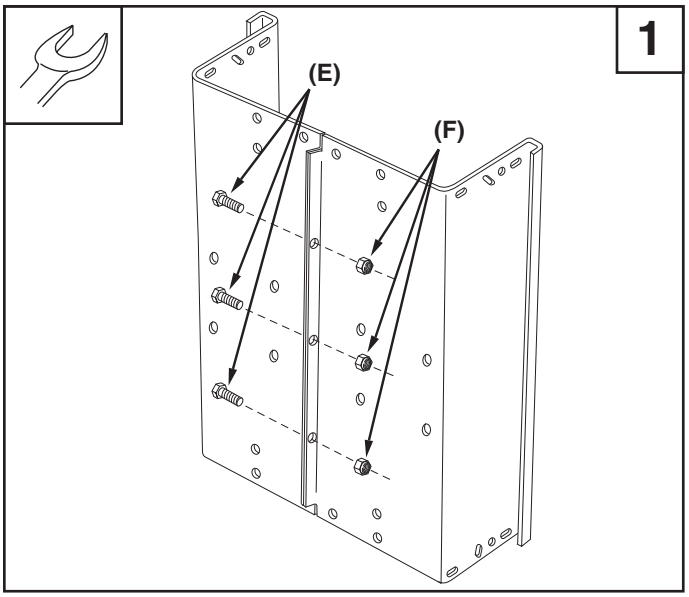
1
(E)
(F)

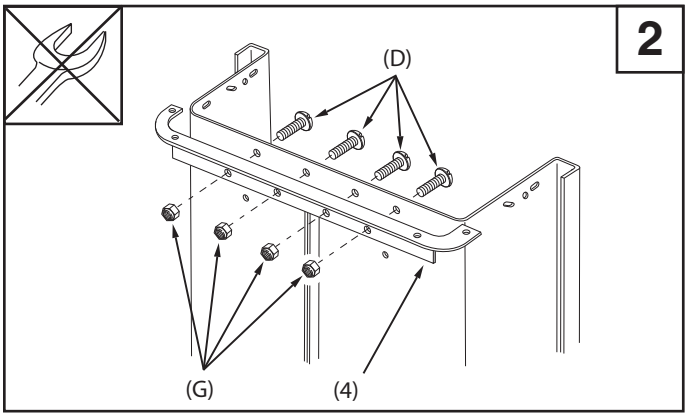
2
(D)
(G)
(4)

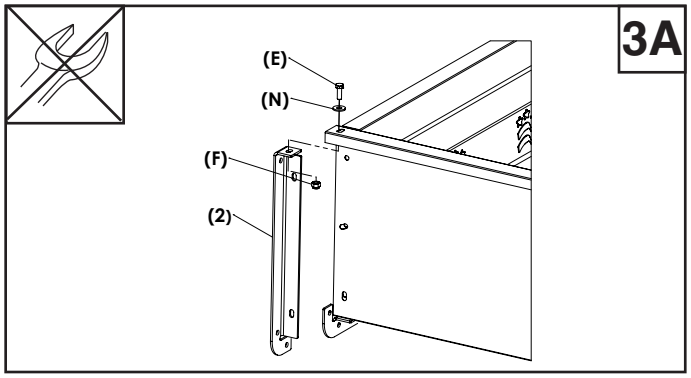
3A
(E)
(N)
(F)
(2)

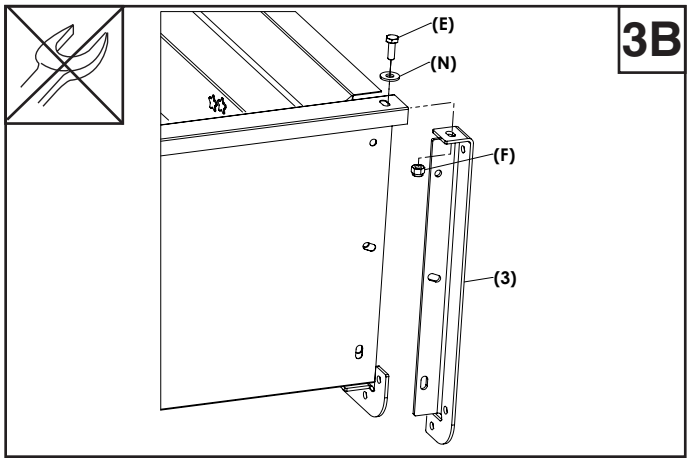
3B
(E)
(N)
(F)
(3)

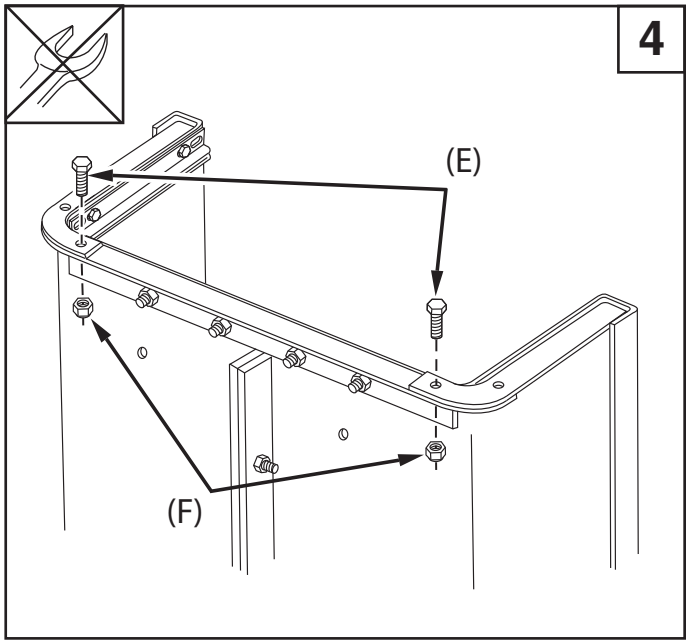
4
(E)
(F)

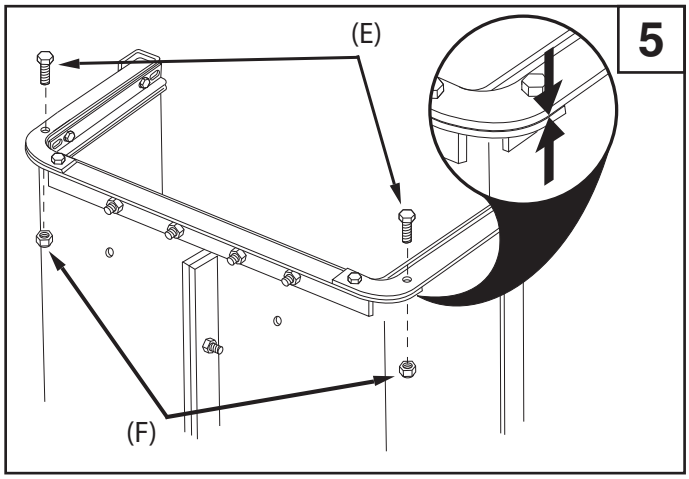
5
(E)
(F)

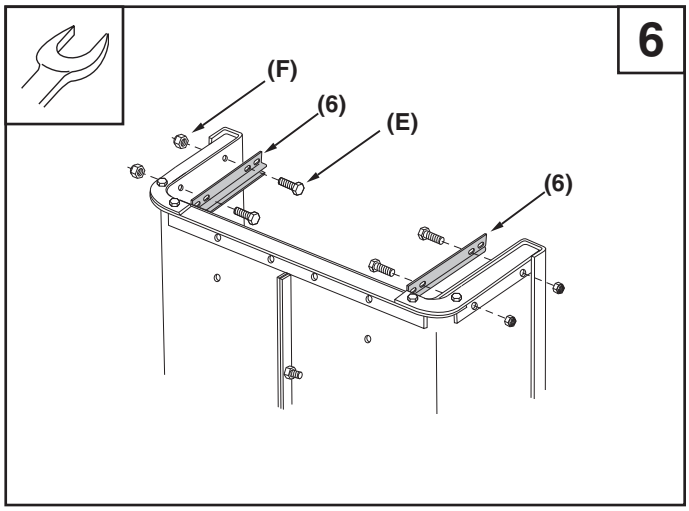
6
(F)
(6)
(E)
(6)

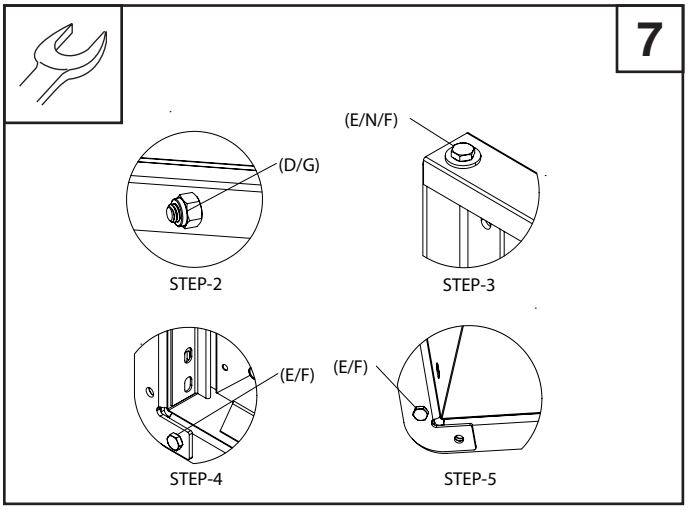
7
(D/G)
STEP-2
(E/N/F)
STEP-3
(E/F)
STEP-4
(E/F)
STEP-5

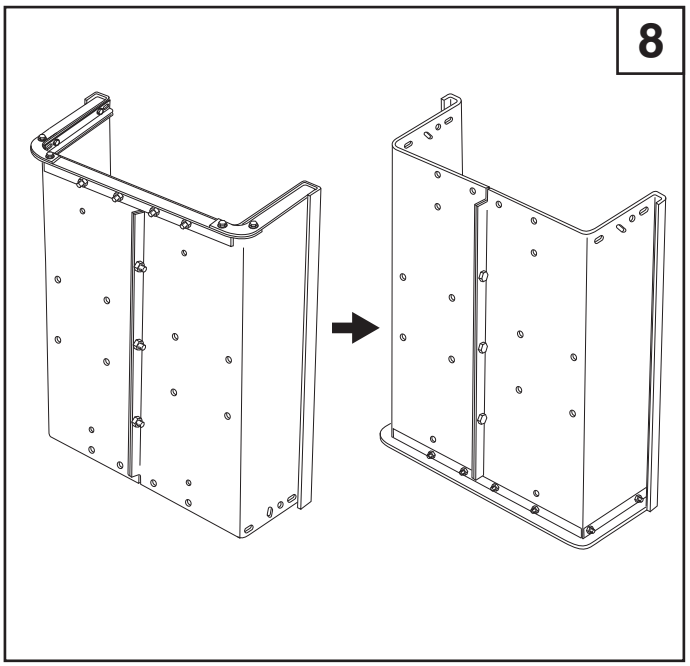
8

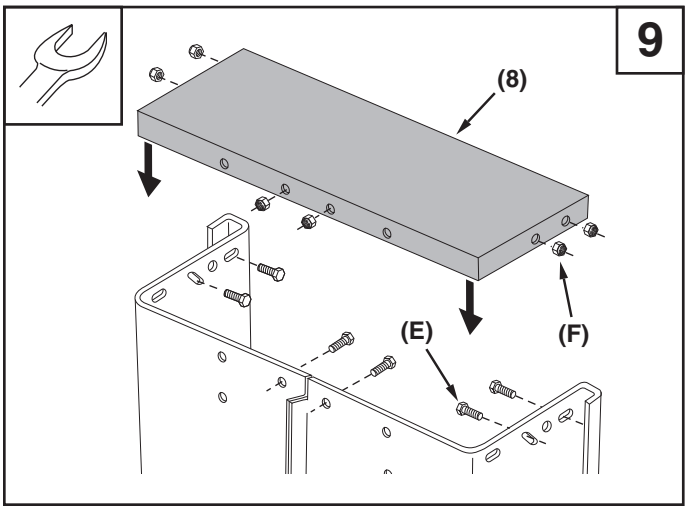
9
(8)
(E)
(F)

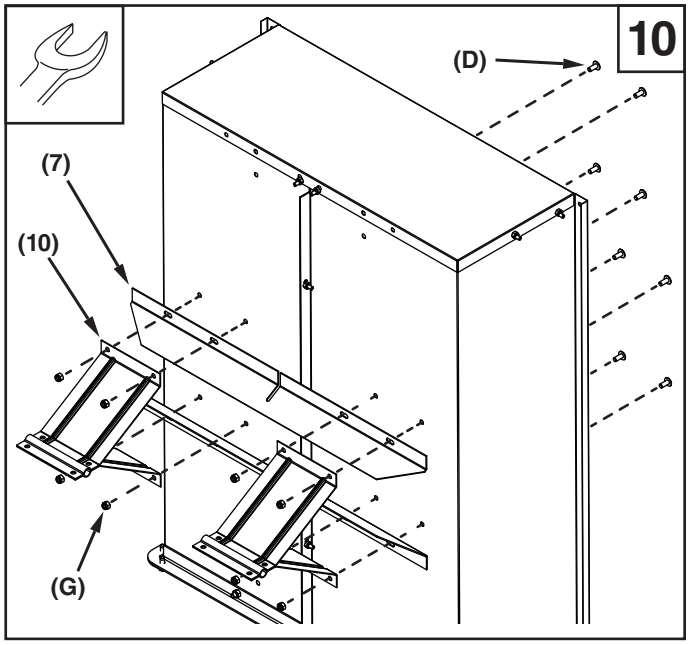
10
(D)
(7)
(10)
(G)

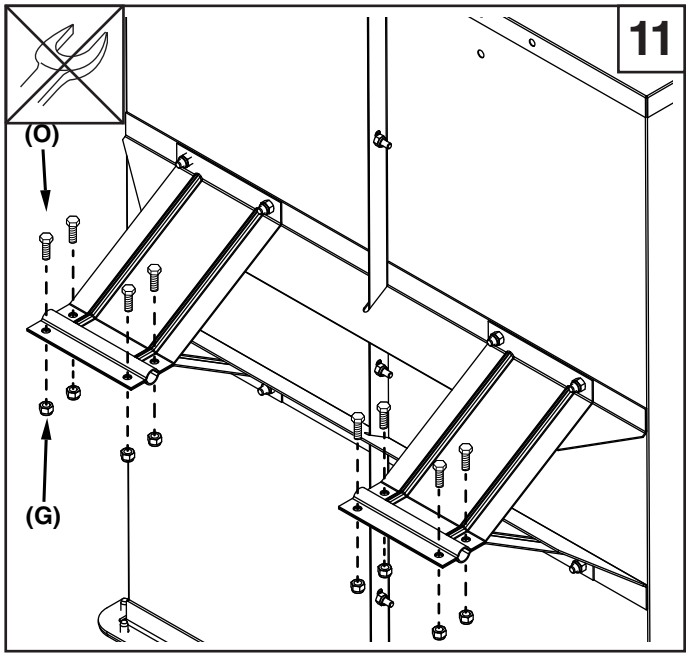
11
(O)
(G)

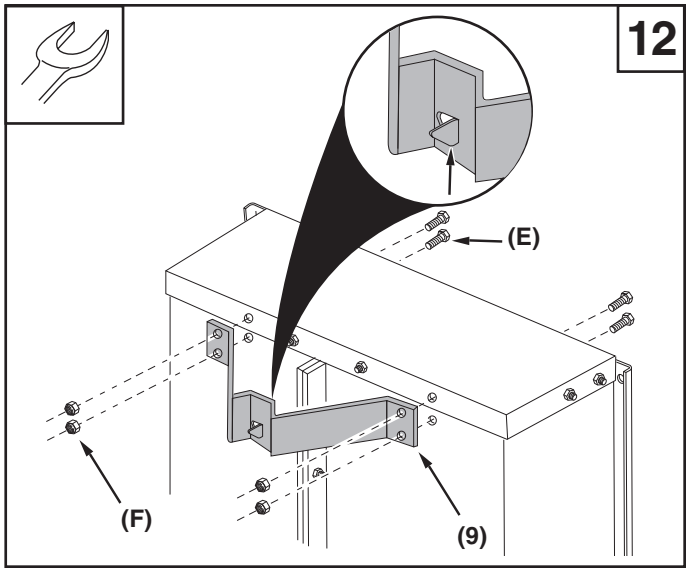
12
(E)
(F)
(9)

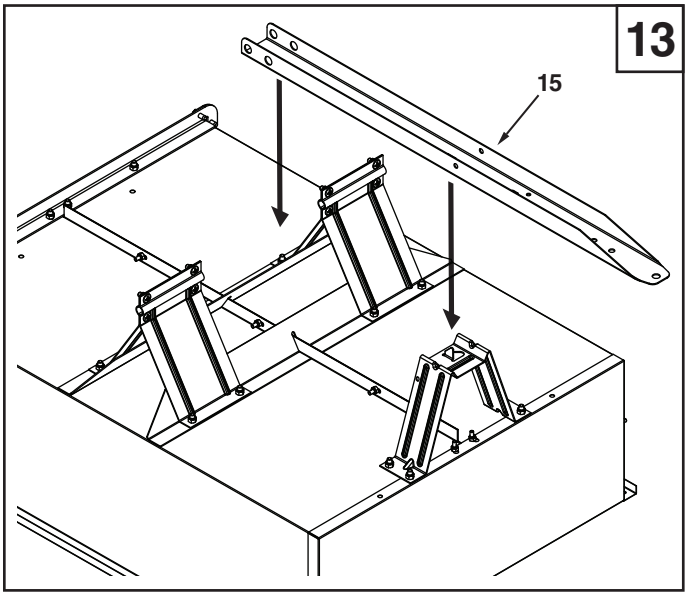
13
15

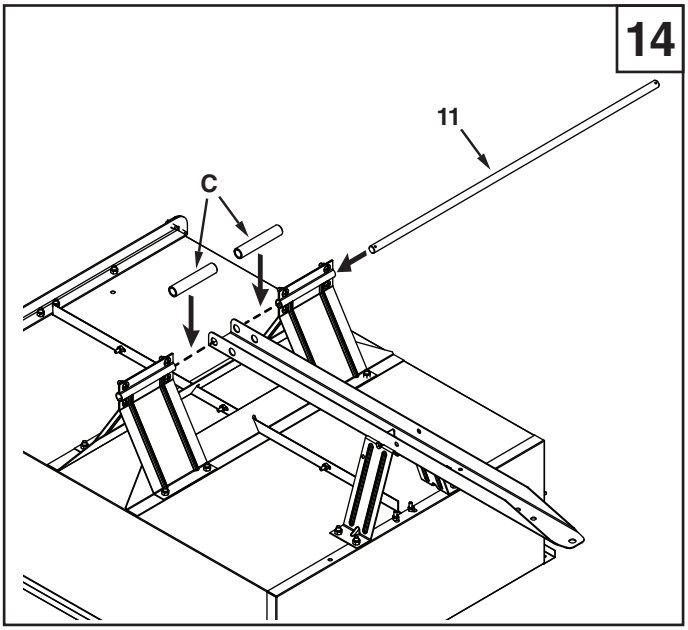
14
11
C

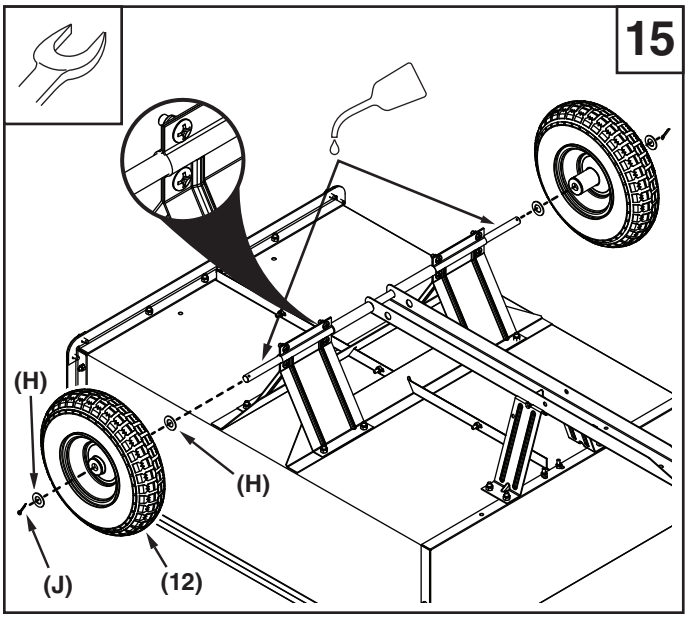
15
(H)
(H)
(J)
(12)

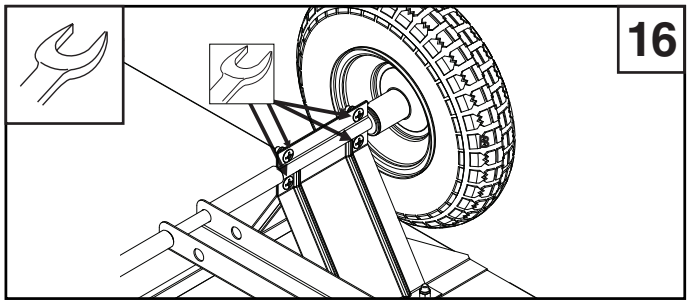
16

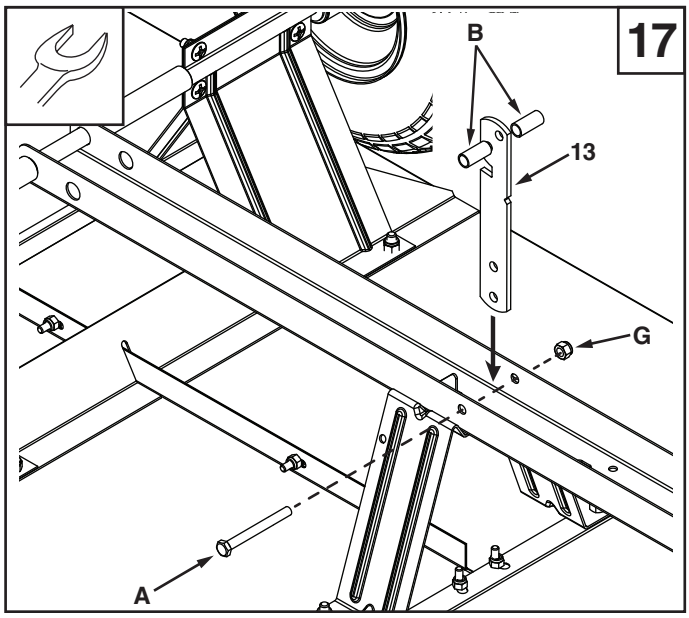
17
B
13
G
A

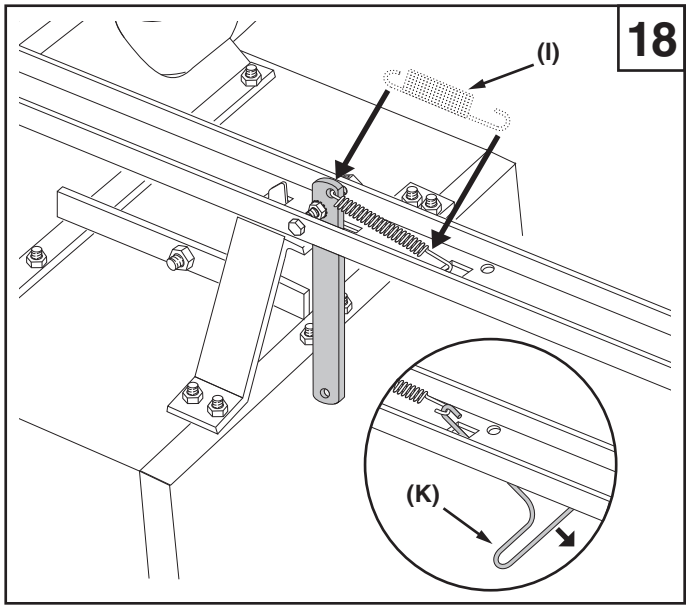
18
(I)
(K)

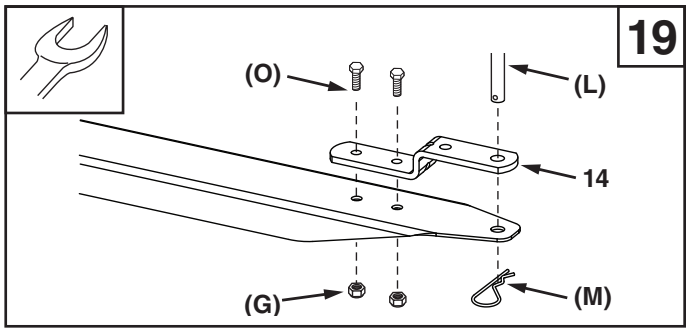
19
(O)
(L)
14
(G)
(M)

45-03038 / 967 02 71-01

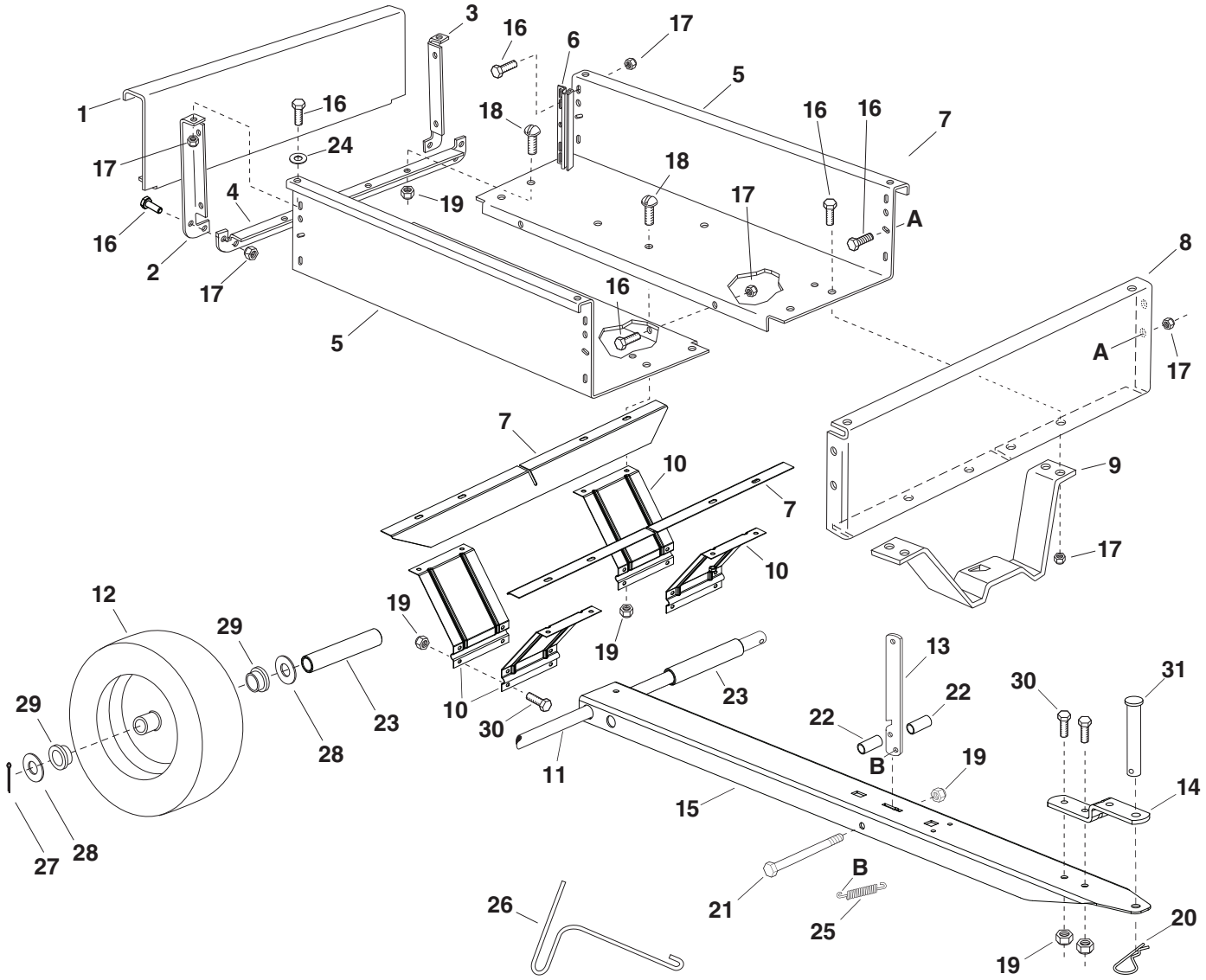

REF.	PART NO.	QTY.	DESCRIPTION	REF.	PART NO.	QTY.	DESCRIPTION
1	24907BL3	1	Tailgate	18	43814	12	Slt. Truss Hd. Bolt, 5/16-18 x 3/4"
2	24144BL1	1	Angle, RH Rear	19	47810	23	Nylock Nut, 5/16-18
3	24143BL1	1	Angle, LH Rear	20	43343	1	Hair Cotter Pin, 1/8" (#4)
4	24142BL1	1	Angle, Lower Rear	21	46782	1	Hex Bolt, 5/16-18 x 3"
5	28115BL3	2	Cart Body	22	42563	2	Spacer, 0.375" x 0.5" x 1"
6	23548	2	Guide, Tailgate	23	27846	2	Spacer, 0.65" x 0.88" x 4.75"
7	27980BL1	2	Bed Support	24	43088	2	Washer, 1/4"
8	28116BL3	1	Front Panel	25	47408	1	Extension Spring
9	27843BL1	1	Latch Stand Bracket	26	47622	1	Spring Puller Tool
10	27844BL1	4	Wheel Support	27	43010	2	Cotter Pin, 1/8" x 1-1/4"
11	24908	1	Axle	28	R19212016	4	Washer, .656" x 1.25" x .059"
12	40880	2	Wheel	29	40880 BRG	4	Wheel Bearing (included in wheel)
13	24498BL1	1	Latch Lock Lever	30	43182	10	Bolt, Hex 5/16 - 18 x 3/4
14	23687BL1	1	Hitch Bracket	31	HA23638	1	Hitch Pin
15	28117BL3	1	Draw Bar Tongue		45841	1	Owner's Manual
16	43012	23	Hex Bolt, 1/4-20 x 3/4"				
17	47189	23	Nylock Nut, 1/4-20				

SpeedEPart the fastest way to purchase parts www.speedepart.co

REPAIR PARTS
Agri-Fab, Inc.
303 West Raymond
Sullivan, IL. 61951
217-728-8388
www.agri-fab.com

This document (or manual) is protected under the U.S. Copyright Laws and the copyright laws of foreign countries, pursuant to the Universal Copyright Convention and the Berne convention. No part of this document may be reproduced or transmitted in any form or by any means, electronic or mechanical, including photocopying or recording, or by any information storage or retrieval system, without the express written permission of Agri-Fab, Inc. Unauthorized uses and/or reproductions of this manual will subject such unauthorized user to civil and criminal penalties as provided by the United States Copyright Laws.

© 2026 Agri-Fab, Inc.