ADIRoffice

MOBILE
WOOD ROLL FILE
20 SLOTS

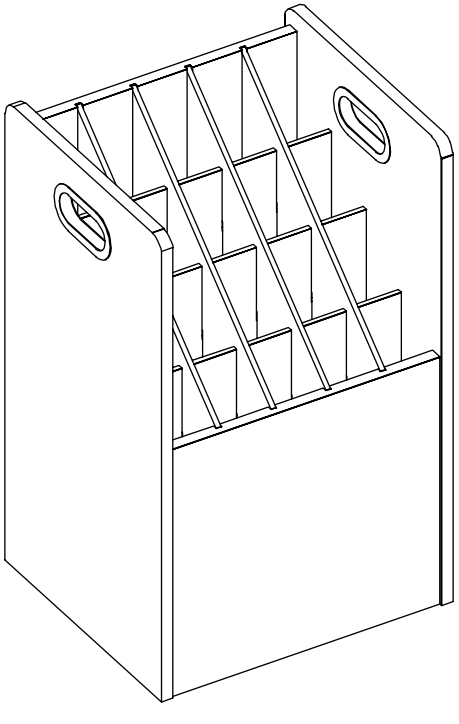

USER GUIDE

SKU: ADI624-SERIES

ADIRoffice

Thank you for your purchase.

AdirOffice maintains a strong practice of ongoing development of products and commercial research.

We understand starting and maintaining a business is expensive enough. We can help you make it cost effective and beautiful. Plus, our expert team makes sure everything you need works as efficiently as possible.

Table of Contents

2 Specifications

3 Parts List

4 Hardware List

4 Tools Needed (Not Included)

5 Assembly Instructions

10 Warranty

11 Notes

Specifications

Product Dimensions: 23.25" H x 15.25" W x 13.25" D

Number of Slots: 20

Recommended

Recommended Number of People Required for Assembly



1 person

Parts List

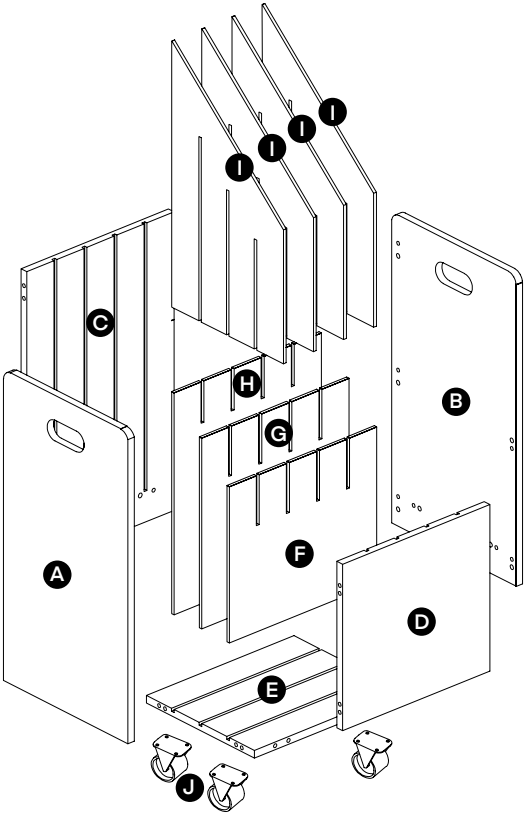

A	Left Side	F	Middle Panel 1
B	Right Side	G	Middle Panel 2
C	Back Panel	H	Middle Panel 3
D	Front Panel	I	Middle Panel 4 (x4)
E	Bottom Panel	J	Wheels (x4)

Hardware List

1 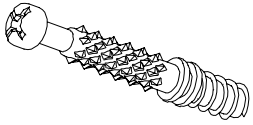 Cam Lock Screws (x16)	2 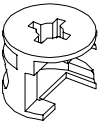 Cam Lock Nuts (x16)
3 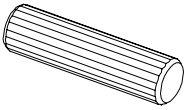 Wooden Dowels (x18) 8x30	4 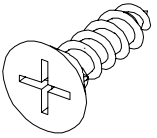 Screws (x16) M4x12mm

Tools Needed (Not Included)

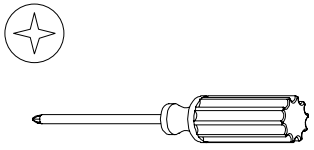

Phillips Head Screwdriver

Assembly Instructions

Step 1:

A. Fasten the fourteen Cam Lock Screws (1) and fourteen Wooden Dowels (3) to the Left Side Panel (A) and Right Side Panel (B) with a screwdriver.

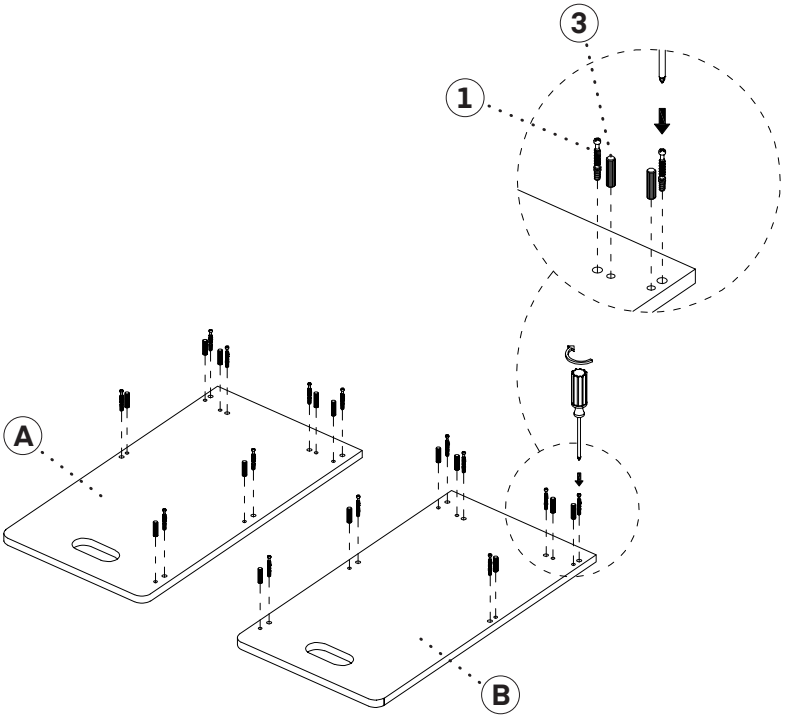

Step 2:

A. Fasten two Cam Lock Screws (1) and four Wooden Dowels (3) into the Back Panel (C) and Front Panel (D).

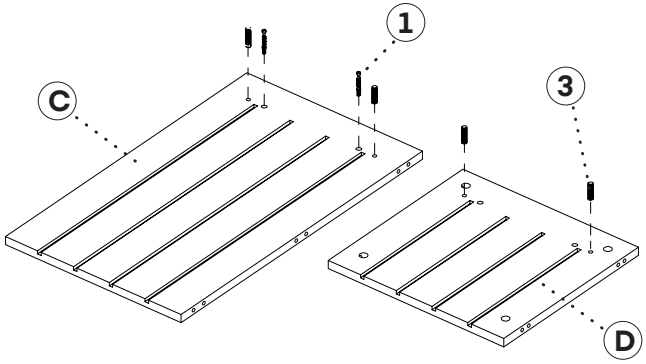

Step 3:

A. Attach the Back Panel (C) and Front Panel (D) to the Bottom Panel (E), until flush, and secure with eight Cam Lock Nuts (2).

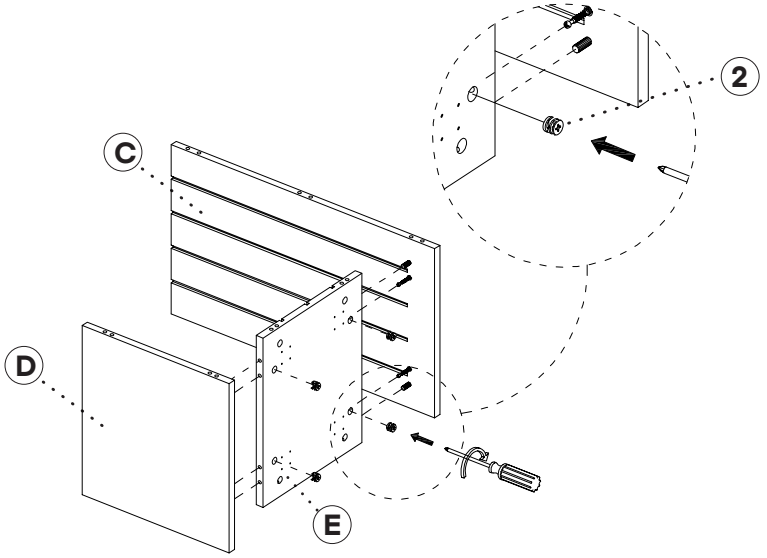

Step 4:

A. Attach the Left Side Panel (A) and Right Side Panel (D) to the assembly from Step 3. Push firmly until flush.

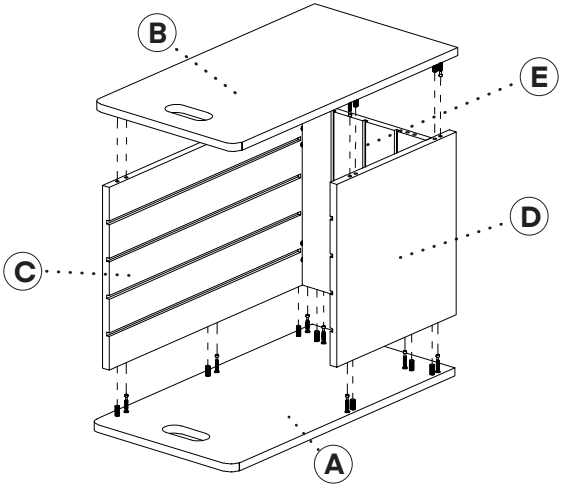

Step 5:

A. Secure the assembled structure with six Cam Lock Nuts (2).

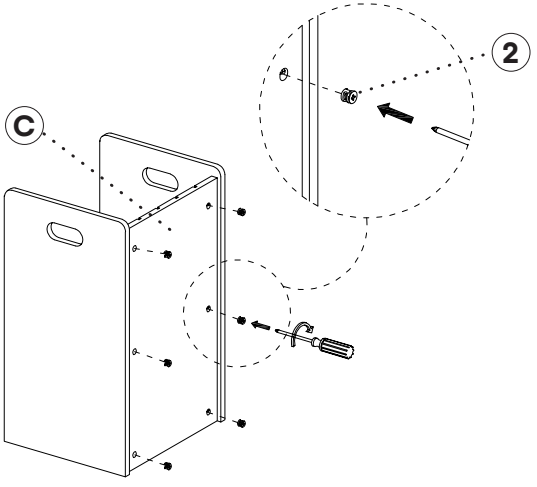

Step 6:

A. Secure the interior assembly with four Cam Lock Nuts (2).

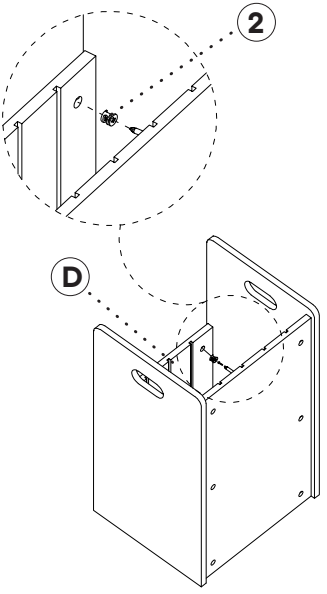

Step 7:

A. Fasten the Wheels (J) to the Bottom Panel (E) with sixteen Screws (4).

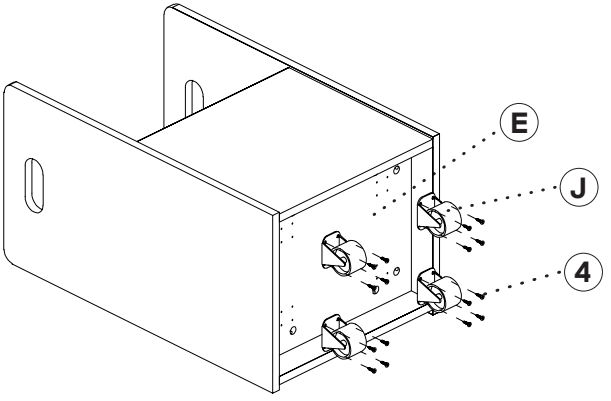

Step 8:

A. Drop the vertical Middle Panels 1 (F), 2 (G), and 3 (H) into the assembled structure, as pictured.

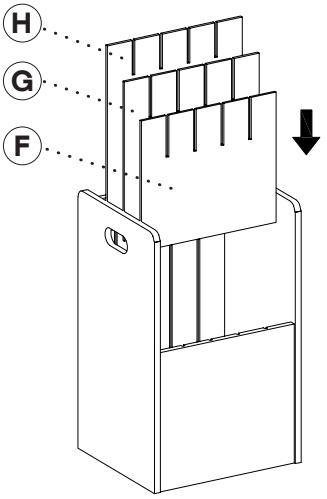

Step 9:

A. Insert the four horizontal Middle Panels 4 (I) into the horizontal middle panel slots, pictured below.

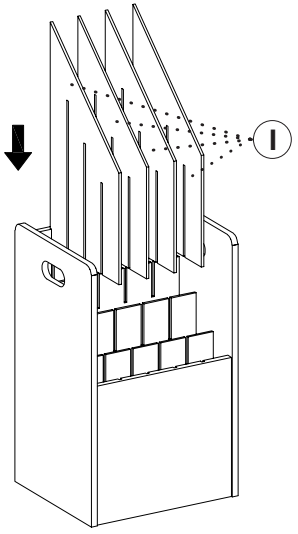

Warranty

1. Adir Corp (the "Company" or "Tiger Companies") warrants to the purchaser that the product will be free from defects in workmanship and materials for a period of 6 months from the date of purchase. The warranty period is not extended if we repair, replace, exchange, or provide a refund for the product (as determined in our sole discretion). We may change the availability of this limited warranty at our discretion, but any changes will not be retroactive.
2. These warranties are not assignable or transferable to any other person, including, without limitation, any subsequent owner or other transferee of the product.
3. This Warranty does not apply to: (a) damage caused by misuse, tampering, abuse, neglect, or accident; (b) damage caused by improper installation, modification, or service; (c) alteration of the serial number; or (d) use that violates the instructions furnished by the Company will void this warranty.
4. The sole responsibility of the Company shall be limited to (a) the repair or replacement (in its sole discretion) of any component of the product which fails to conform to this; (b) a refund the purchase price of such product (in its sole discretion), at no cost to the purchaser for the period of the warranty, or (c) an exchange for a similar product, comparable in function and price.
5. Contact the Company directly at 1-(800)-805-1790 to obtain service under this warranty. If it becomes applicable to send a defective product to the Company, a Return Authorization Number must first be obtained from the Company. In order to obtain service under this warranty, purchaser may be required to provide the Company with the following items (a) proof of purchase, (b) photographs and or videos (of the damage, and (c) a written testimonial describing the defect.
6. Products shipped without prior Return Authorization and Return Authorization Number may not be accepted, and the Company will not be responsible for their disposition and/or cost of return to the owner.
7. The Company will not assume any responsibility for any loss or damage incurred in shipping and or delivery.
8. The product(s) must be returned within 14 calendar days of receiving the return authorization from the Company and must include the original proof of purchase for the warranty to be honored.
9. Any implied warranties that the purchaser may have are limited to the duration of the warranties described above. There are no further warranties that extend or apply beyond the face hereof, and the Company expressly disclaims and excludes any and all warranties of merchantability or fitness for a particular purpose. Some states do not allow limitations on how long an implied warranty lasts, so the above limitation may not apply to you.
10. THE REMEDIES DESCRIBED ABOVE ARE YOUR SOLE AND EXCLUSIVE REMEDIES AND THE COMPANY'S ENTIRE LIABILITY FOR ANY BREACH OF THIS LIMITED WARRANTY. OUR LIABILITY SHALL UNDER NO CIRCUMSTANCES EXCEED THE ACTUAL AMOUNT PAID BY YOU FOR THE DEFECTIVE PRODUCT, NOR SHALL WE UNDER ANY CIRCUMSTANCES BE LIABLE FOR ANY CONSEQUENTIAL, INCIDENTAL, SPECIAL OR PUNITIVE DAMAGES OR LOSSES, WHETHER DIRECT OR INDIRECT. SOME STATES DO NOT ALLOW THE EXCLUSION OR LIMITATIONS OF INCIDENTAL OR CONSEQUENTIAL DAMAGES, SO THE LIMITATION MAY NOT APPLY TO YOU.
11. This warranty gives you specific legal rights, and you may also have additional rights which vary from state to state.

Notes



ADI624-SERIES

© 2025 Adir Corp

adircorp.com