Catalog #		Date		Prepared by	
Project		Type		Notes	

HALO
OUTDOOR SECURITY

SEC - NEXT GEN - SOLAR SECURITY FLOODLIGHT

WITH LONG BATTERY LIFESPAN IN A COMPACT DESIGN

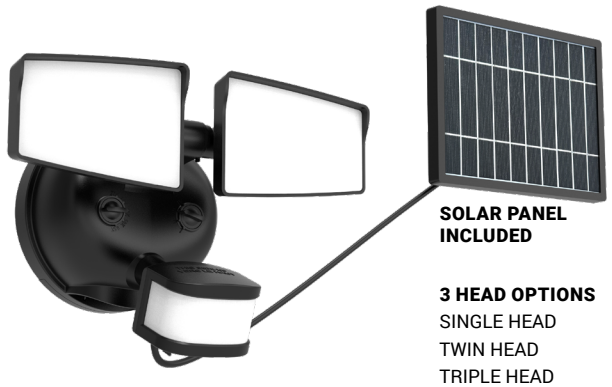

SOLAR PANEL INCLUDED

3 HEAD OPTIONS
SINGLE HEAD
TWIN HEAD
TRIPLE HEAD

CATEGORY	LUMENS	AVAILABLE TYPE	AVAILABLE FINISH
SEC1H - SINGLE HEAD	UP TO 1000 LUMENS	DUSK TO DAWN + MOTION ACTIVATED	WHITE, BLACK
SEC2H - TWIN HEAD	UP TO 1500 LUMENS		
SEC3H - TRIPLE HEAD 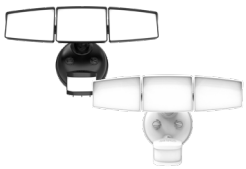	UP TO 2000 LUMENS		

Interactive Menu

- Order Information page 4
- Product Specification page 4
- Product Warranty
- Product Dimensions page 3
- Photometric Data page 5

The Next Gen series solar powered outdoor security light provides the comfort of a security light without the hassle of wiring a conventional fixture. Available in 1000, 1500 and 2000 lumen motion activated fixture. Integrated LEDs are rated at 50,000 hours for maintenance-free operation.

This product is perfect for wall or eave mount. Integrated 240-degree motion sensor automatically turns the light on when motion is detected (Dusk to Dawn). Polycrystalline solar panel with 15 ft. cord allows for optimal placement in direct sunlight for best performance.

This flood light is ideal for walkways, yards, patios, and driveways creating an inviting exterior space as well as providing safety and security. Available in black and white finishes.

TOP PRODUCT FEATURES

SELECTABLE LUMENS

HIGHEST HIGH MEDIUM LOW

50,000 HR | IP65 | 240° | 45' | LIMITED WARRANTY 3YEAR

- Single, Twin & Triple head integrated LED Security Floodlights
- Choose from motion, dusk-to-dawn, or motion + dusk-to-dawn modes
- **Motion Sensor:** 240° coverage; up to 45 ft detection range
- **Brightness Control:** Selectable 25–100% light output
- **Brightness (Lumens):** Up to 1000 lm (1-head); 1500 lm (2-head); 2000 lm (3-head)
- **CCT:** 5-position selectable white (2700K, 3000K, 4000K, 5000K, 6500K)
- **Heads & Aiming:** Adjustable heads for targeted coverage of driveways, yards, and entrances
- **Mounting:** Wall or eave installation
- Wet location-listed; IP65 rated for outdoor use
- Available in matte black and white finishes
- 50,000 hrs of maintenance-free operation
- 3-year warranty

PRODUCT CERTIFICATION

RoHS FC

PRODUCT FEATURE HIGHLIGHTS

SUPER BRIGHT & HIGHLY EFFICIENT:

CONFIGURABLE OUTDOOR LIGHT: Flood light provides 4 brightness levels gives multiple options starting from 1000 (Single Head), 1500 Lumen (Twin Head) and 2000 Lumen (Triple Head)

5 CCT Selectable white light (2700K, 3000K, 4000K, 5000K, 6500K) for various lighting needs. Settings can be adjusted by rotation of dials

SELECT BETWEEN MODES OF OPERATIONS:

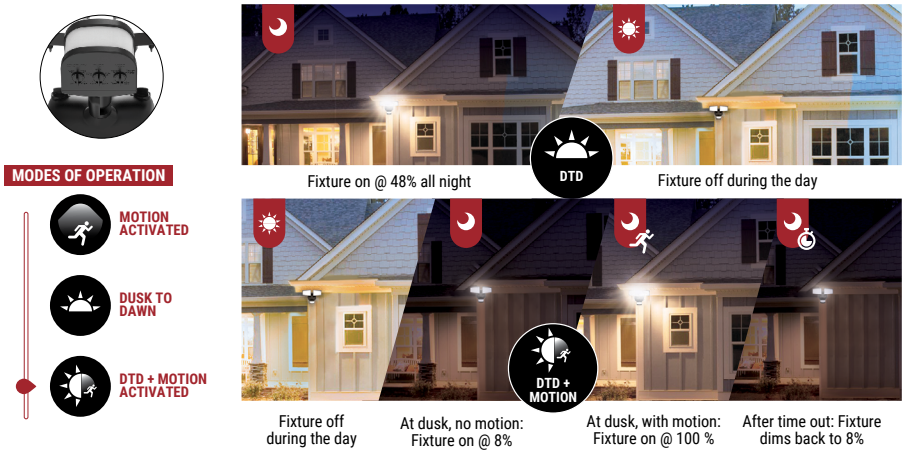

TYPICAL APPLICATIONS

RESIDENCIAL APPLICATIONS

- Garages
- Patios
- Backyards
- Barns & Sheds
- General security lighting

MOUNTING TYPES

EAVE MOUNT

WALL MOUNT

PRODUCT DIMENSIONS

SINGLE HEAD

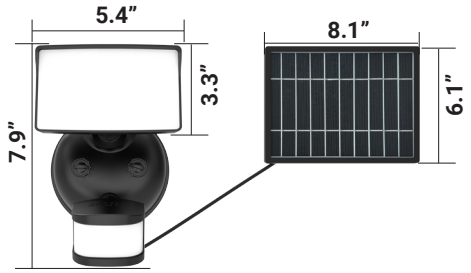

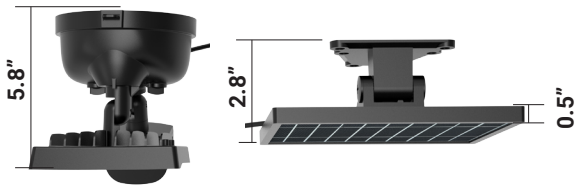

TWIN HEAD

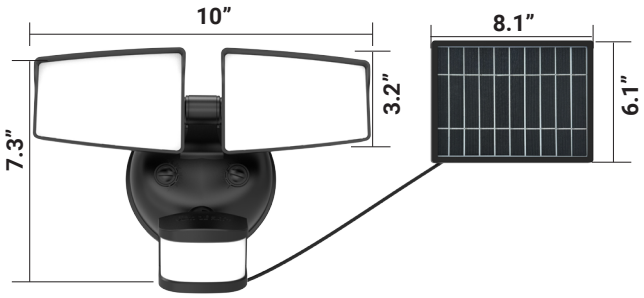

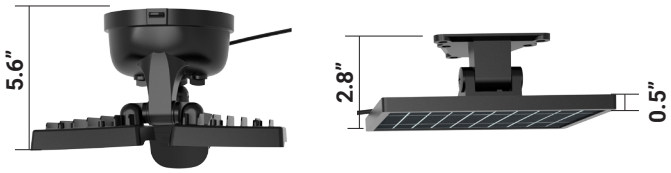

TRIPLE HEAD

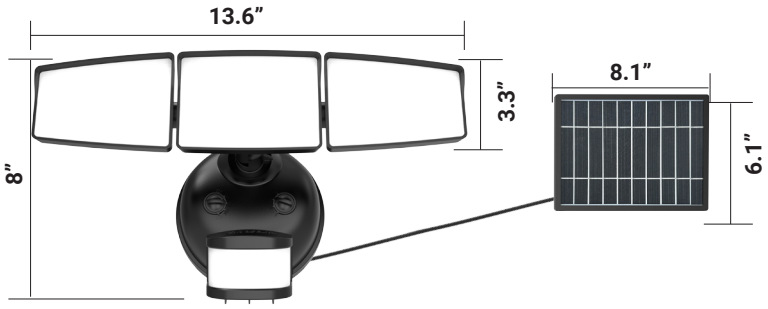

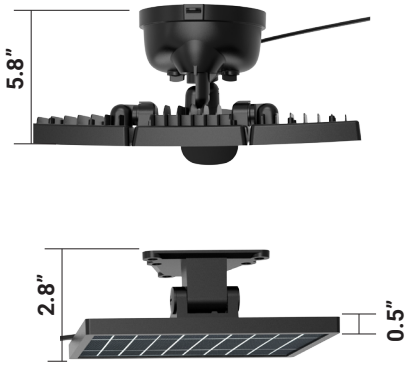

PRODUCT SPECIFICATIONS

Construction
- Lightweight, UV resistant polycarbonate housing
- Tool-less light head and motion sensor adjustment
- Durable & Suitable for wet locations

Installation
- Suitable for wall or eave mounting
- Mounting hardware included in the box

Optics
- Three Lumen Packages available: 1000 (Single), 1500 (Twin) and 2000 (Triple)
- UV resistant and Frosted lens to provide even illumination
- Square head & Integrated visors allow for visually pleasing illumination with minimal glare

Electrical
- Selectable brightness (Lumen) with Field Adjustable Output (FAO) power
- 5 Selectable light color temperature settings – 2700K/3000K/4000K/5000K/6500K
- Maintenance -free LEDs with estimated 50,000 hours lifespan based on TM-21 calculations
- Mid power LED array provides a uniform source with high efficiency and no pixelation
- Rated for ambient operating temperature range from -40°F (-40°C) to 104°F (40°C)
- THD ≤ 20%; Power factor ≥ 90% at 30W
- CRI >75

Integrated Controls
- 240°- degree motion sensor with detection range up to 45ft
- 3 Adjustable motion sensor settings (Sensitivity, Timer & Mode)
- Adjustable motion sensitivities (OFF, LOW, MED & HIGH)
- Adjustable auto timeout settings of 30s, 60s, 90s, 120s & 180s
- Motion Sensing Mode – Test, Motion, Motion+DTD (Dusk to Dawn), DTD (Dusk to Dawn) Settings

Compliance and Certifications
- Contains no mercury or lead and RoHS compliant
- Photometric testing in accordance with IES LM-79-08
- Lumen maintenance projections in accordance with IES LM-80-08 and TM-21-11
- Lumen maintenance projections:

Time (t) at which to estimate lumen maintenance (hours):	50,000
Lumen maintenances at time (t) (%):	88.4%
Reported L70 (hours):	>54,000

Finish
- Matte Black/ White Finish

Warranty
Three year limited warranty,
consult website for details.
www.cooperlighting.com

ORDER INFORMATION

Catalog Number	Description	UPC*
SEC1HSSOLMBLK	SOLAR SEL 1000 5CCT 27TO65 MOTION 1H BLK	080083304226
SEC2HSSOLMBLK	SOLAR SEL 1500 5CCT 27TO65 MOTION 2H BLK	080083304240
SEC3HSSOLMBLK	SOLAR SEL 2000 5CCT 27TO65 MOTION 3H BLK	080083304264
SEC1HSSOLMWH	SOLAR SEL 1000 5CCT 27TO65 MOTION 1H WH	080083304462
SEC2HSSOLMWH	SOLAR SEL 1500 5CCT 27TO65 MOTION 2H WH	080083304486
SEC3HSSOLMWH	SOLAR SEL 2000 5CCT 27TO65 MOTION 3H WH	080083304509

Don't see a product listed here? Ask about our Made to Order options for even more configurations

*** Till the stock lasts.**

PHOTOMETRIC DATA

Configuration	Lamp Type	SKU	FAO Setting	Lumen	Power	Efficacy	Operation
Single	Solar	SEC1HSSOLMBLK	IV (100%)	969	8	121	Dusk to Dawn OR Motion Activated OR Dusk-to-Dawn + Motion Activated
			III (75%)	678	6.00	113	
			II (50%)	465	4.00	116	
			I (25%)	232	2.00	116	
		SEC1HSSOLMWH	IV (100%)	952	8	119	
			III (75%)	666	6.00	111	
			II (50%)	457	4.00	114	
			I (25%)	228	2.00	114	
Twin	Solar	SEC2HSSOLMBLK	IV (100%)	1443	12	120	
			III (75%)	923	9.00	103	
			II (50%)	678	6.00	113	
			I (25%)	332	3.00	111	
		SEC2HSSOLMWH	IV (100%)	1461	12	122	
			III (75%)	935	9.00	104	
			II (50%)	687	6.00	114	
			I (25%)	336	3.00	112	
Triple	Solar	SEC3HSSOLMBLK	IV (100%)	1747	15	116	
			III (75%)	1170	11.25	104	
			II (50%)	821	7.50	109	
			I (25%)	402	3.75	107	
		SEC3HSSOLMWH	IV (100%)	1821	15	121	
			III (75%)	1220	11.25	108	
			II (50%)	856	7.50	114	
			I (25%)	419	3.75	112	

*LED product specification metrics are measured at the default setting of 4000K CCT

*Luminous flux values are based on operation at full battery charge and optimal system performance

*FAO = Field Adjustable Output

SUGGESTED MOUNTING HEIGHT

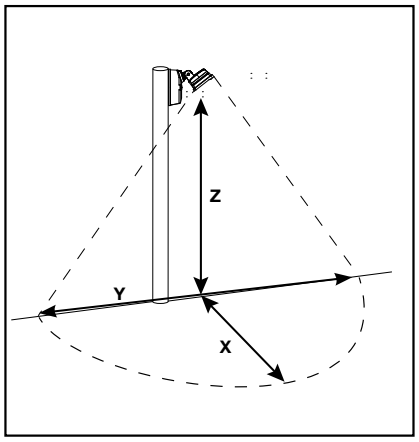

Minimum Footcandles (FC)	0.50 FC					
Mounting Height (Z)	8’		10’		15’	
Catalog Number	X	Y	X	Y	X	Y
SEC1HSSOLMBLK	12.4	26.2	13.1	26.5	13.7	26.3
SEC1HSSOLMWH	12.2	24.0	12.7	25.1	13.0	25.7
SEC2HSSOLMBLK	15.0	28.2	16.0	30.2	17.1	32.9
SEC2HSSOLMWH	15.1	27.8	15.7	32.7	16.9	33.6
SEC3HSSOLMBLK	16.3	33.1	17.4	32.7	18.9	34.7
SEC3HSSOLMWH	16.2	31.6	17.1	31.6	18.7	35.0

X = Forward Throw
Y = Wall Spread
Z = Mounting Heights

Notes:
Forward throw X = 1/2 Y for wall-mount applications only
See IES files for detailed photometry

Cooper Lighting Solutions
1121 Highway 74 South
Peachtree City, GA 30269
P: 770-486-4800
www.cooperlighting.com

© 2026 Cooper Lighting Solutions
All Rights Reserved.

Specifications and dimensions
subject to change without notice.