ASSEMBLY INSTRUCTION
RATTAN SOFA SET

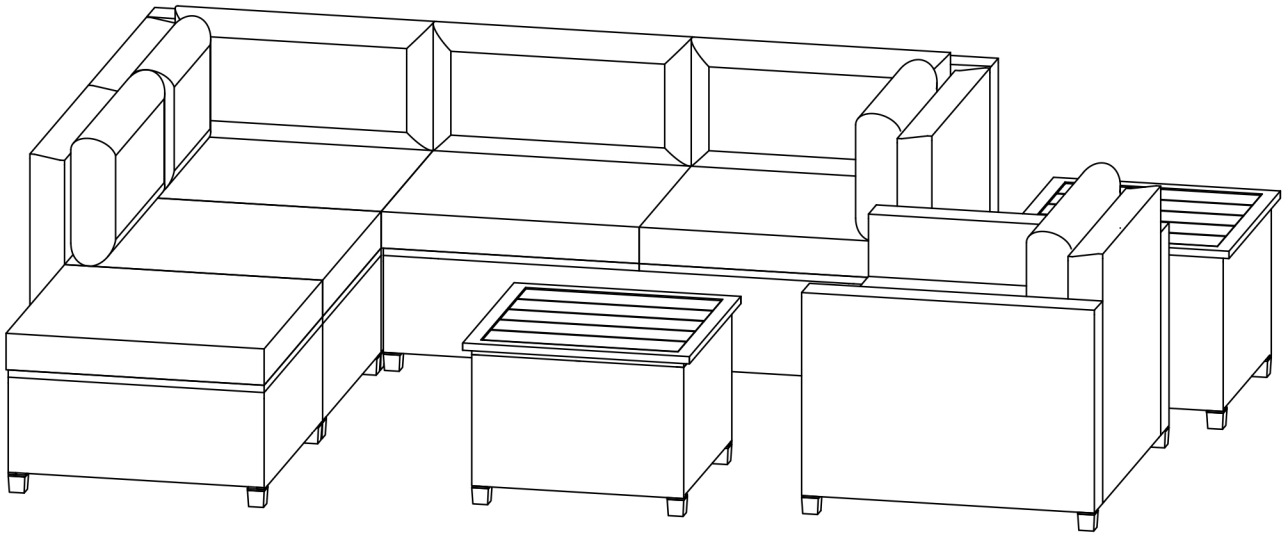

Notice

1. **50% Tighten before fixings all screws, Allen wrench is recommended instead of an electric drill.**
2. **Place the item on a flat ground to adjust and make sure it remains stable.**
3. **Tighten up all screws with tools gradually.**
4. **If the screws are not aligned with holes during assembly, please loosen all all the other screws to 50% and continue the assembly process.**
5. **If the item is not stable, please loosen all the screws, adjust it on a flat ground and tighten up all screws again.**
6. **Note: If one or more screws are fully tightened during assembly, chances are the others will not be aligned with holes. In addition, all the holes are disigned to be relatively larger to provide more space for the adjustment of the screws.**

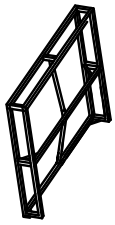

T *1

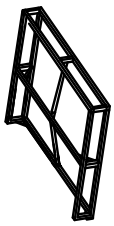

Q *1

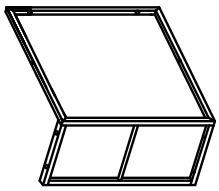

R *1

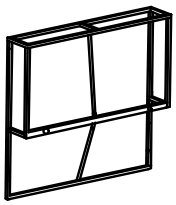

S *1

K

Plistic feet *4

e
Bolt 2 pcs

b
Bolt M6*55 16pcs

c
Washers 24pcs

d
Nut M6 12pcs

Allen Key M4 1pc

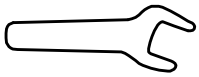

Spanner 1pc

1

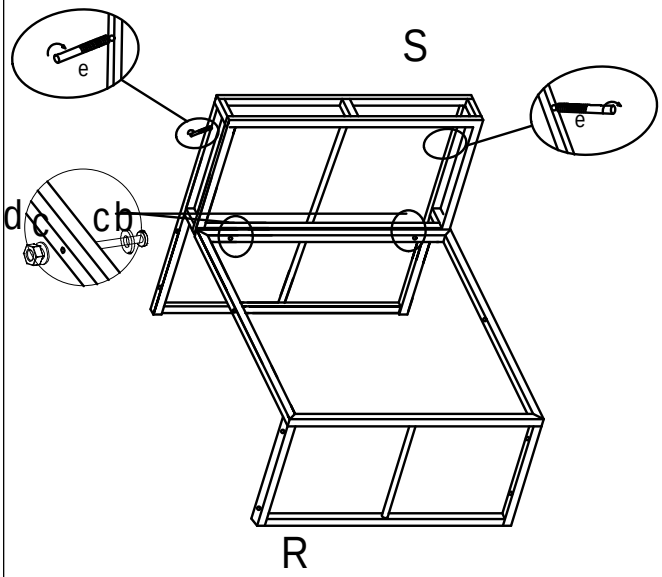

2

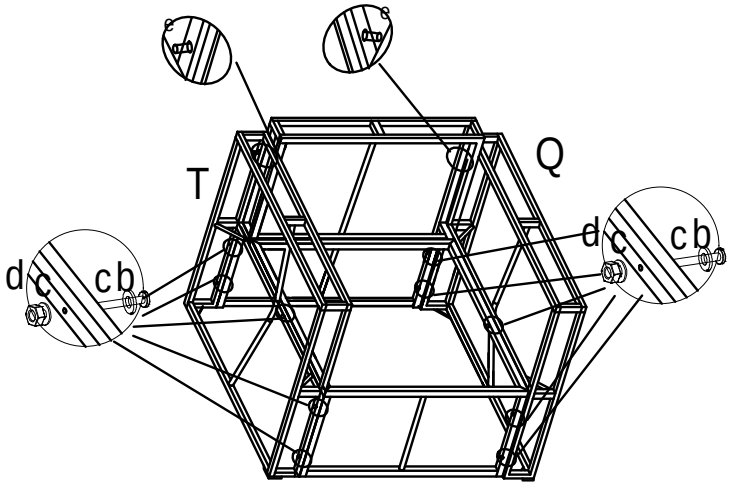

3

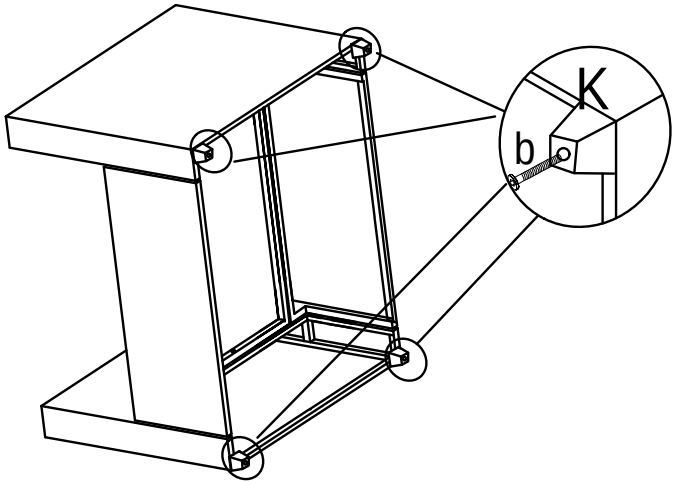

4

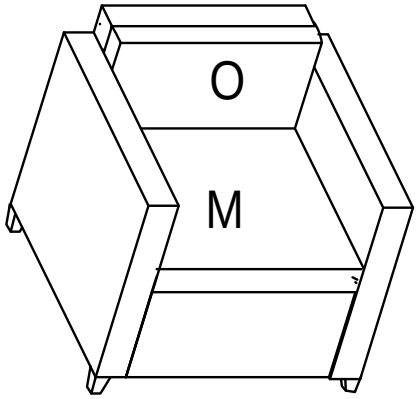

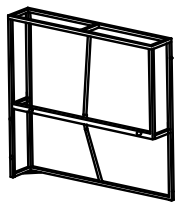

H *1

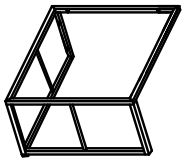

I *1

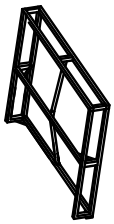

B *1

K

Plistic feet *4

e
Bolt 1 pc

b
Bolt M6*55 13pcs

c
Washers 18pcs

d
Nut M6 9pcs

Allen Key M4 1pc

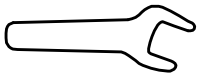

Spanner 1pc

1

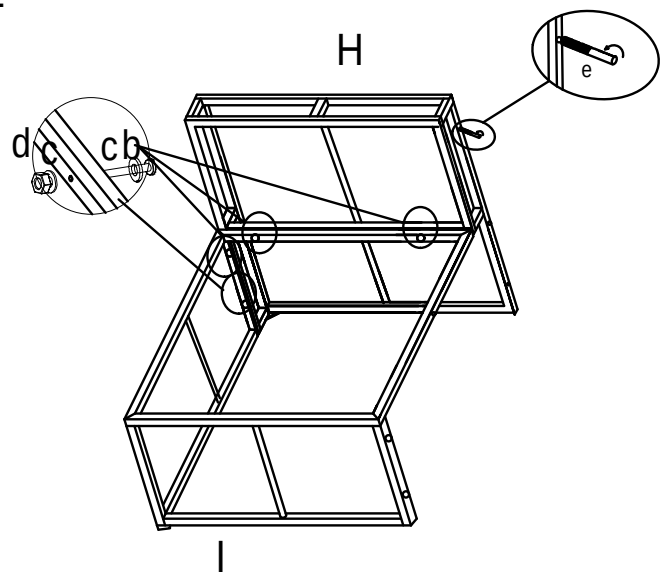

2

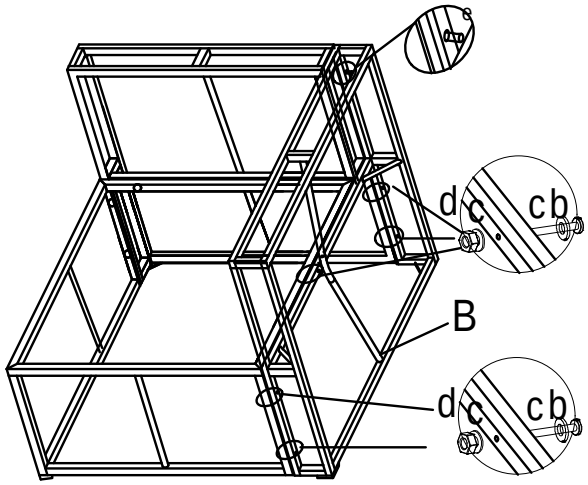

3

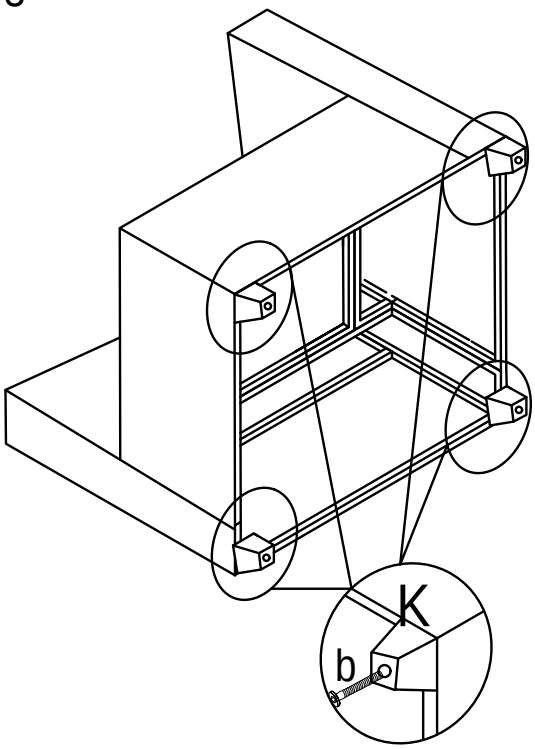

4

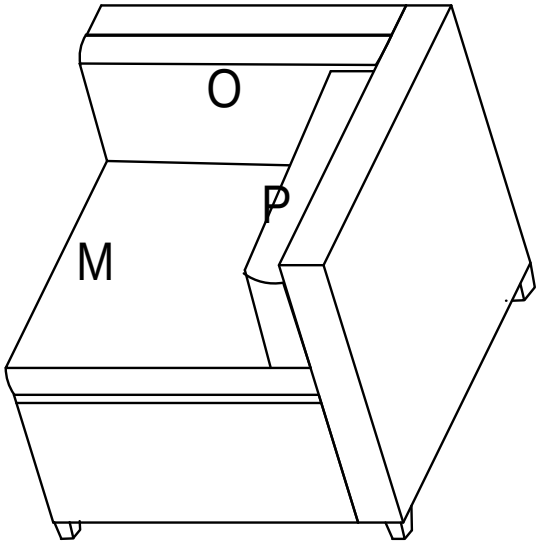

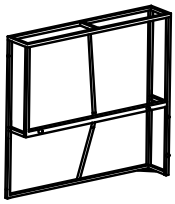

C *1

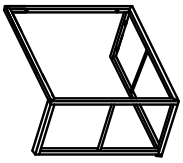

F *1

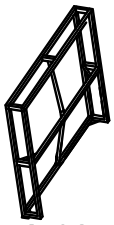

A *1

K

Plistic feet *4

e
Bolt 1 pc

b
Bolt M6*55 13pcs

c
Washers 18pcs

d
Nut M6 9pcs

Allen Key M4 1pc

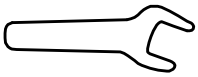

Spanner 1pc

1

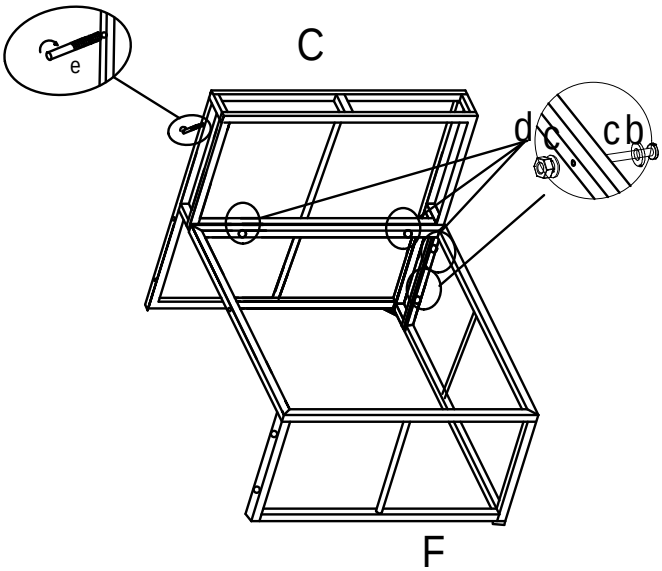

2

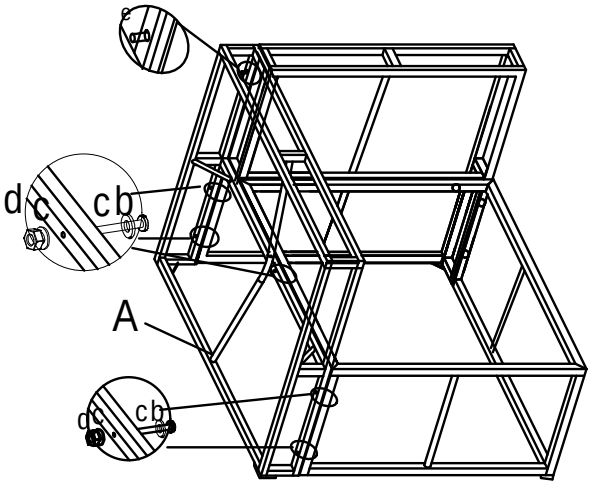

3

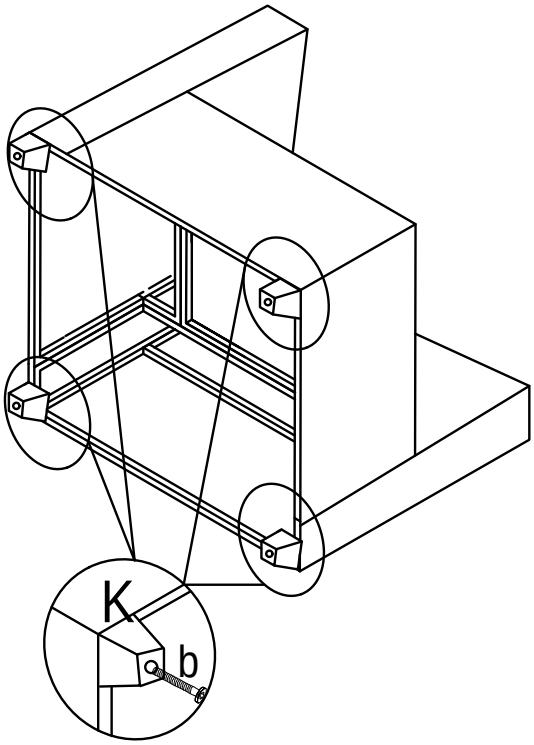

4

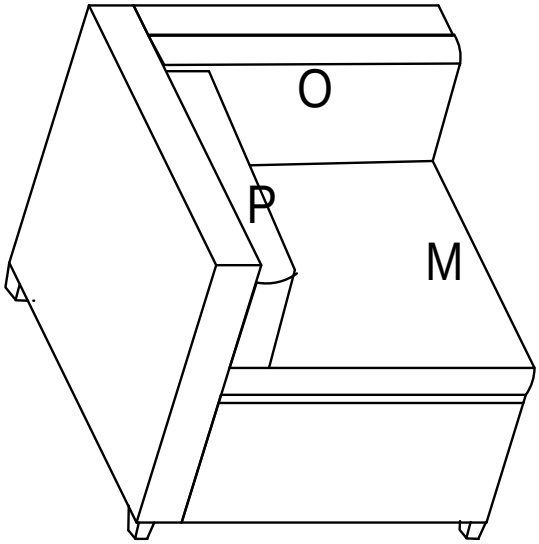

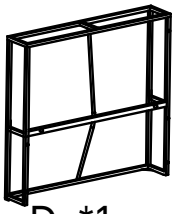

D *1

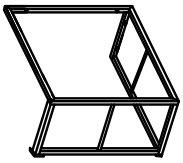

E *1

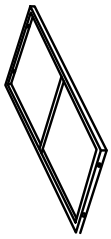

G *1

K

Plistic feet *4

a
Bolt M6*35 2pcs

b
Bolt M6*55 10pcs

c
Washers 14pcs

d
Nut M6 6pcs

Allen Key M4 1pc

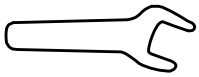

Spanner 1pc

1

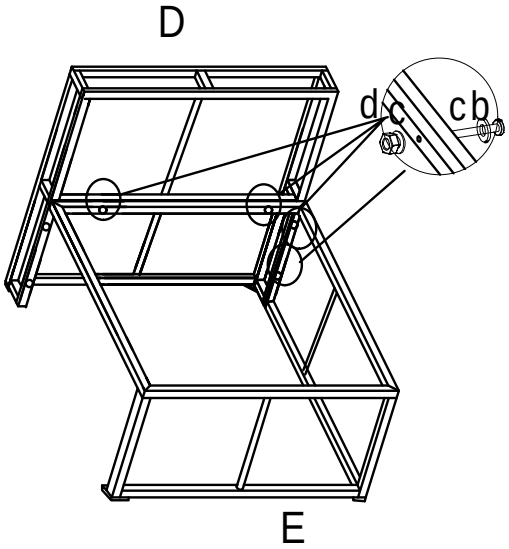

2

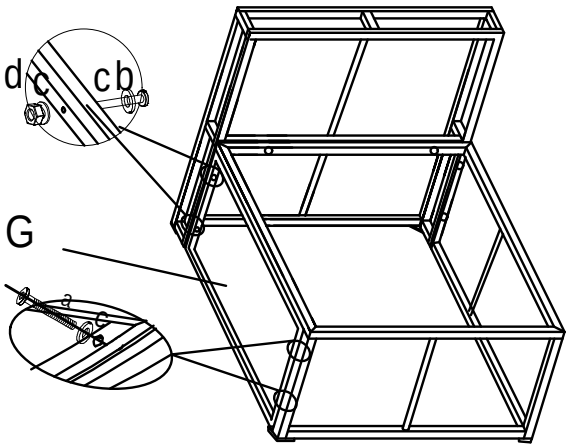

3

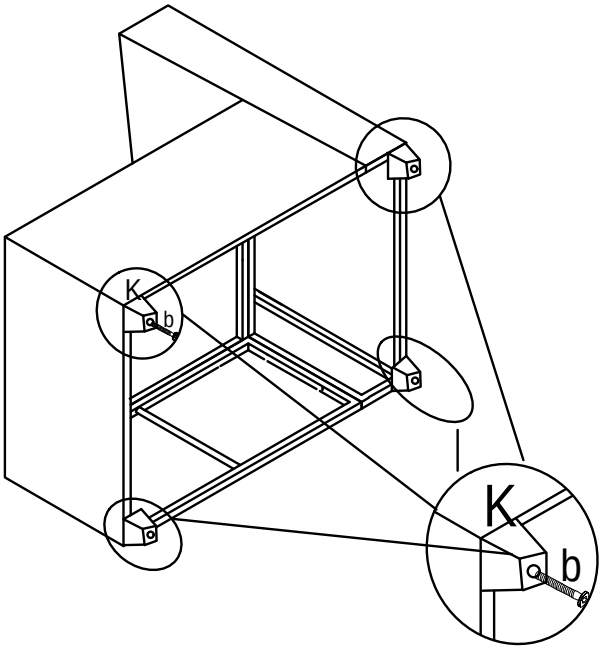

4

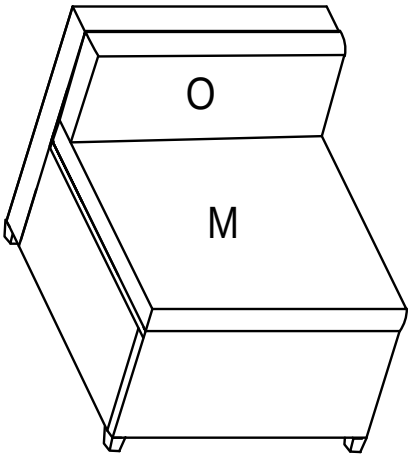

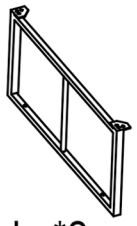

L *2

U *2

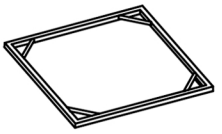

V *1

K

Plistic feet *4

a
Bolt M6*35 12pcs

b
Bolt M6*55 4pcs

c
Washers 12pcs

Allen Key M4 1pc

1

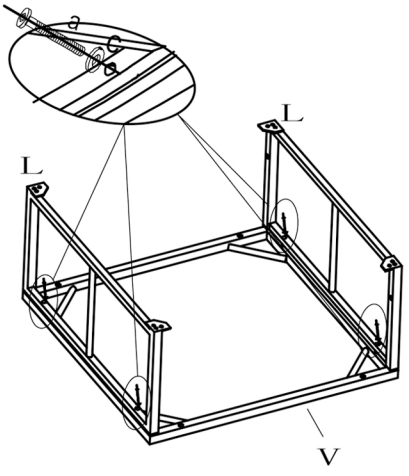

2

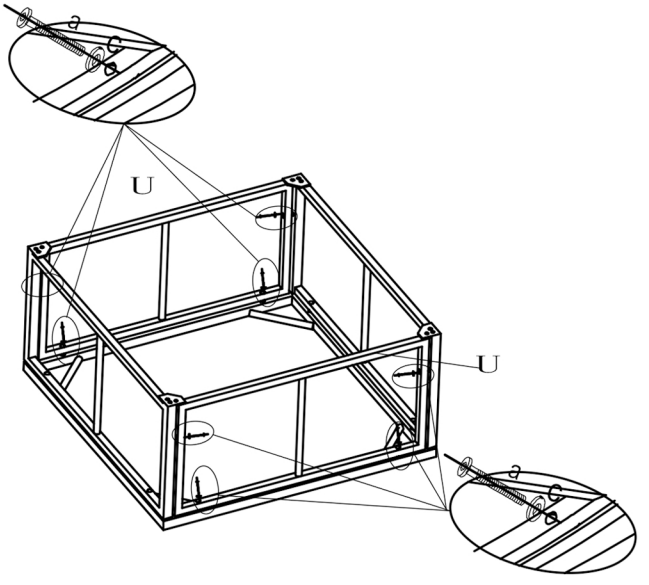

3

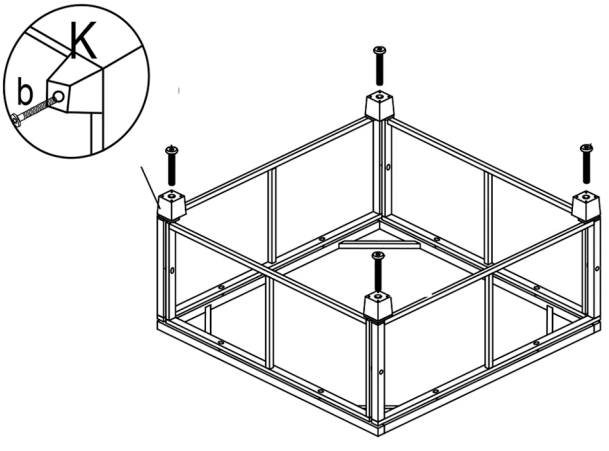

4

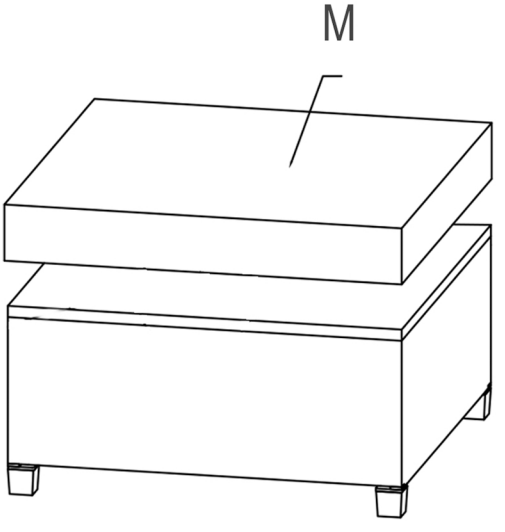

X *2

Y *2

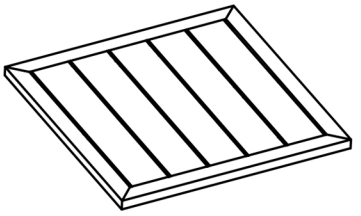

Z *1

K

Plistic feet *4

a
Bolt M6*35 16pcs

b
Bolt M6*55 4pcs

c
Washers 16pcs

Allen Key M4 1pc

1

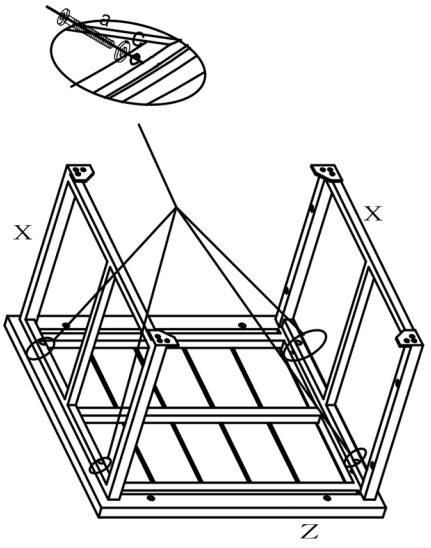

2

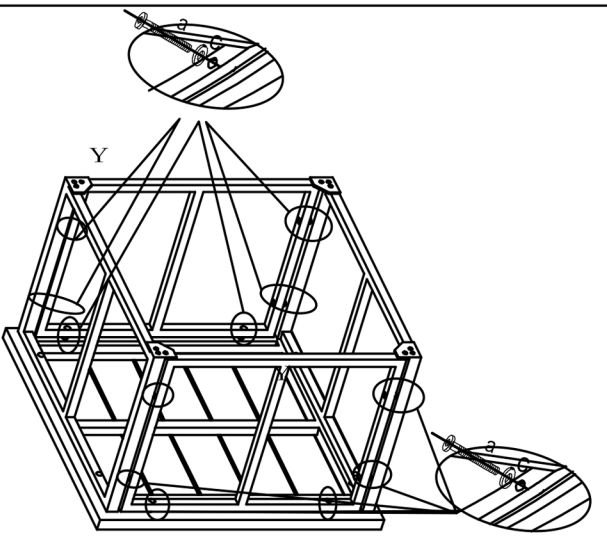

3

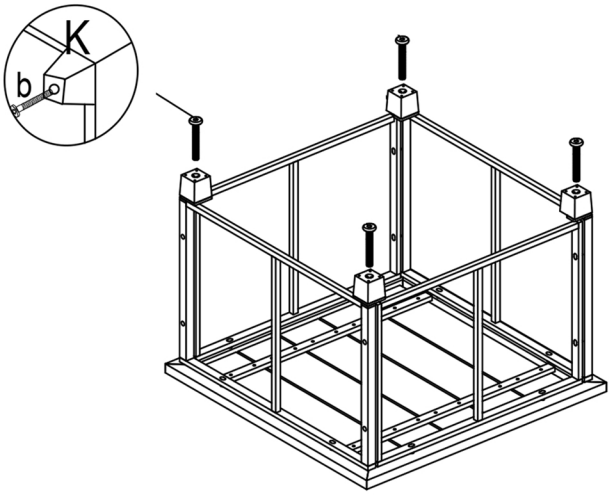

4

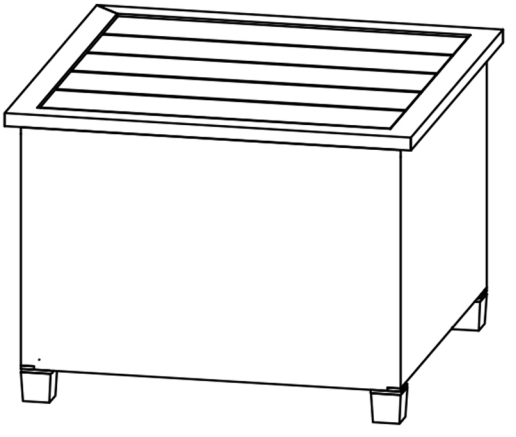
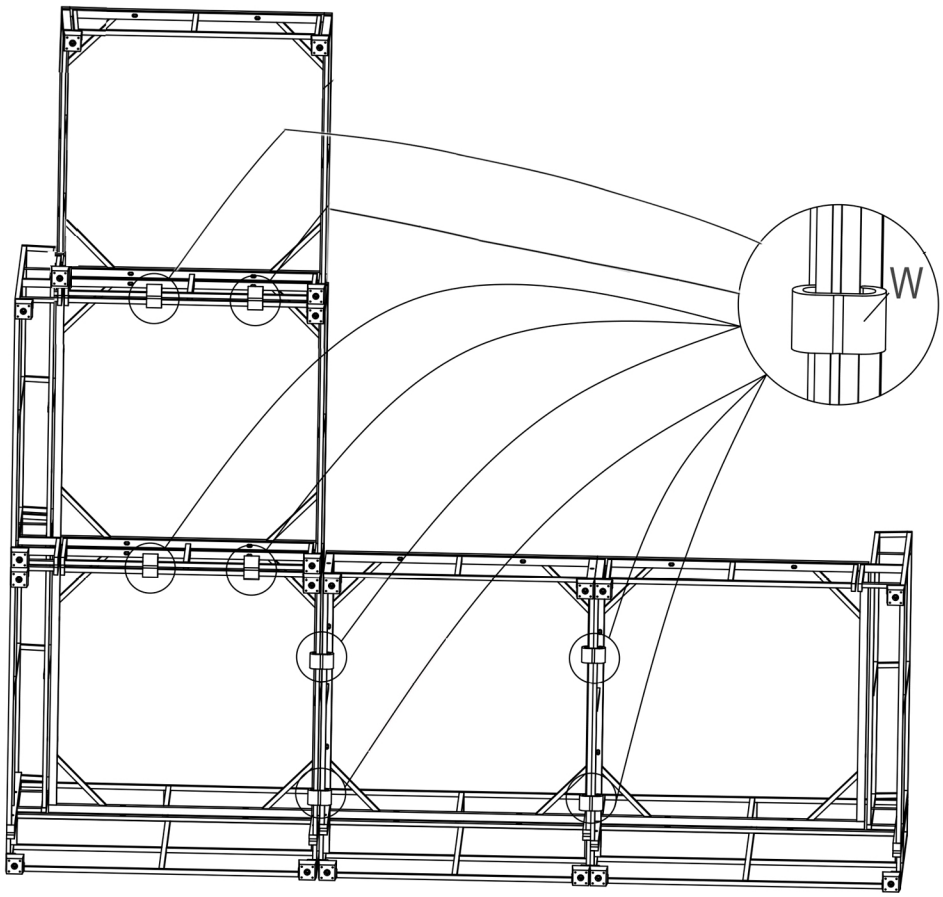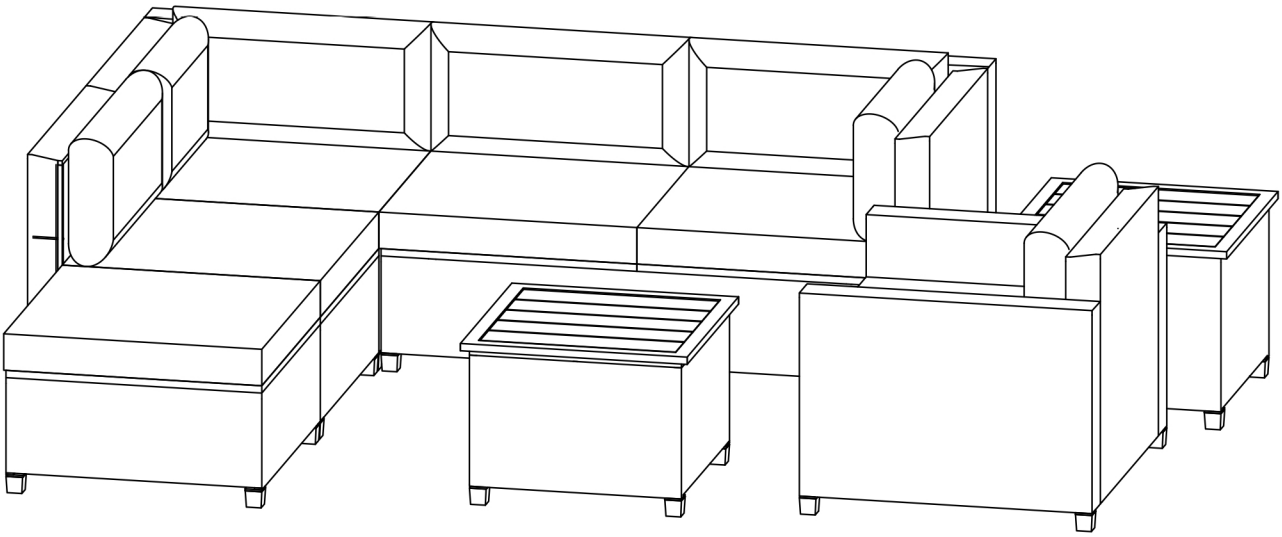
Plastic connector
(8pcs)