16615-NGA

STOP

DO NOT RETURN TO THE STORE!

If you discover missing or damaged parts,
or if you have questions about the building process,
please reach out to us directly for the fastest service.

24/7 Support

help.backyardproducts.com

- Answers to frequently asked questions
- Technical assistance and how-to videos
- Submit a help request
- Request replacement parts

Business Hours

(734) 242-6900

Monday - Friday ..... 8:00am - 6:00pm EST
Saturday - Sunday .....Closed

INSTALLERS WANTED

Did you enjoy building your shed?

JOIN OUR TEAM

AND MAKE UP TO $1,500/WEEK*

Call a Recruiter Today! 734-365-7000

Flexible schedule

No selling, just building

Bonus incentives available

Scan the flowcode to apply today. or visit backyardinstaller.com

SCAN ME

*based on number of completed installations

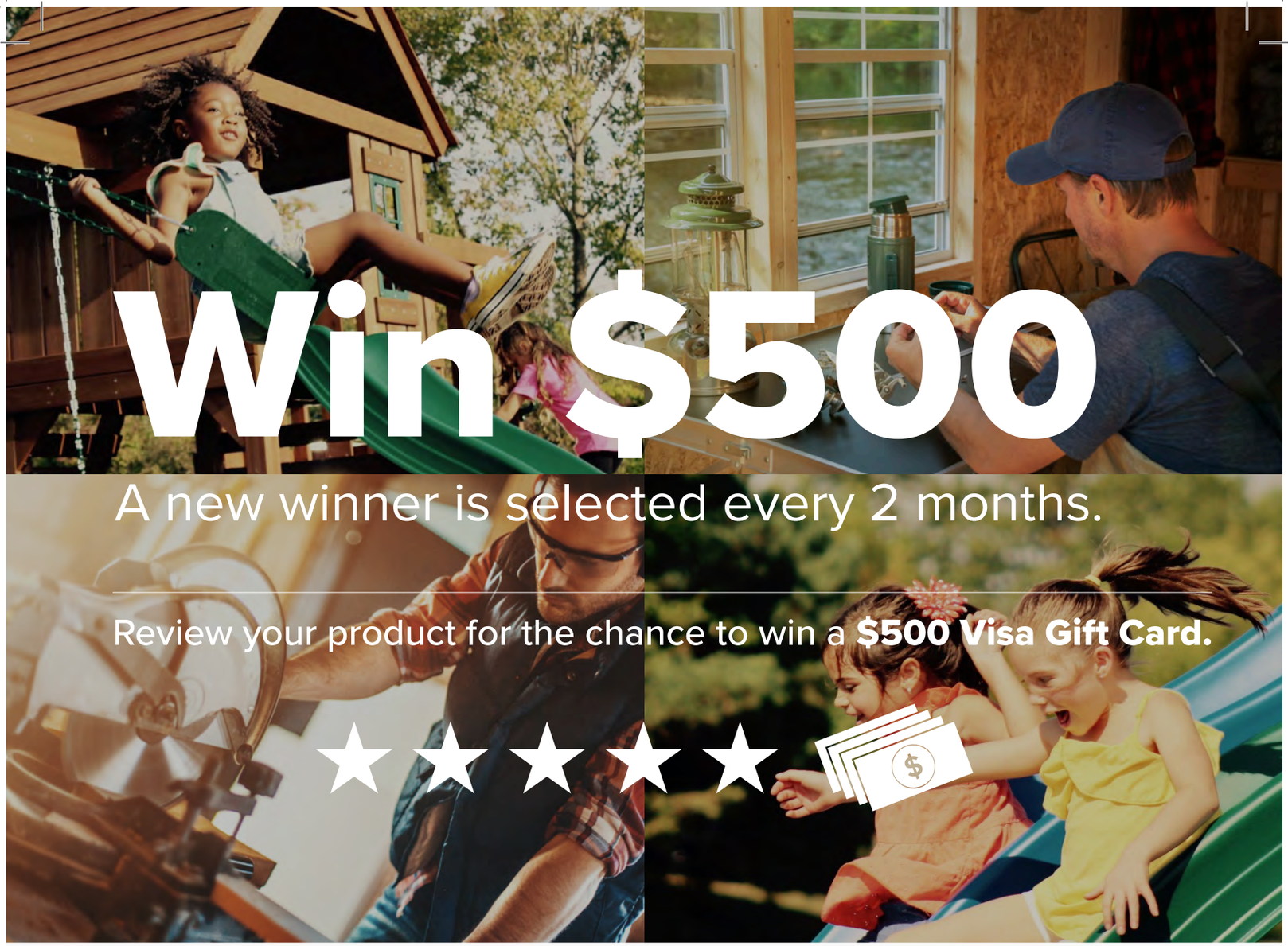

Win $500

A new winner is selected every 2 months.

Review your product for the chance to win a **$500 Visa Gift Card.**

How to Enter:



Open camera.
Aim. Tap.

SCAN ME

or visit backyardreviews.net

1 **Scan**
QR code above.

2 **Click**
'write a review'

3 **Find your product.**
Tell us what you think.

4 **Submit your review.**
You'll be notified by e-mail if you've won the $500 gift card.

Write a Backyard Products, LLC. product review at backyardreviews.net for a chance to win a $500 Visa gift card. No purchase necessary to enter. Must be legal U.S. resident (including DC & Puerto Rico), 18 or older to participate. Taxes on prize are responsibility of winner. Odds of winning depend on the number of eligible reviews received. Void where prohibited. For complete details and official rules, visit https://backyardreviews.net/sweepstakes-rules.

HEARTLAND

VALUE SERIES

16615-NGA | 09-03-2025

ASSEMBLY MANUAL

CLASSIC 12' x 10' (365,8 x 304,8 cm)

ACTUAL FLOOR SIZE 12' x 10' (365,8 x 304,8 cm)

KEEP THIS MANUAL FOR FUTURE REFERENCE

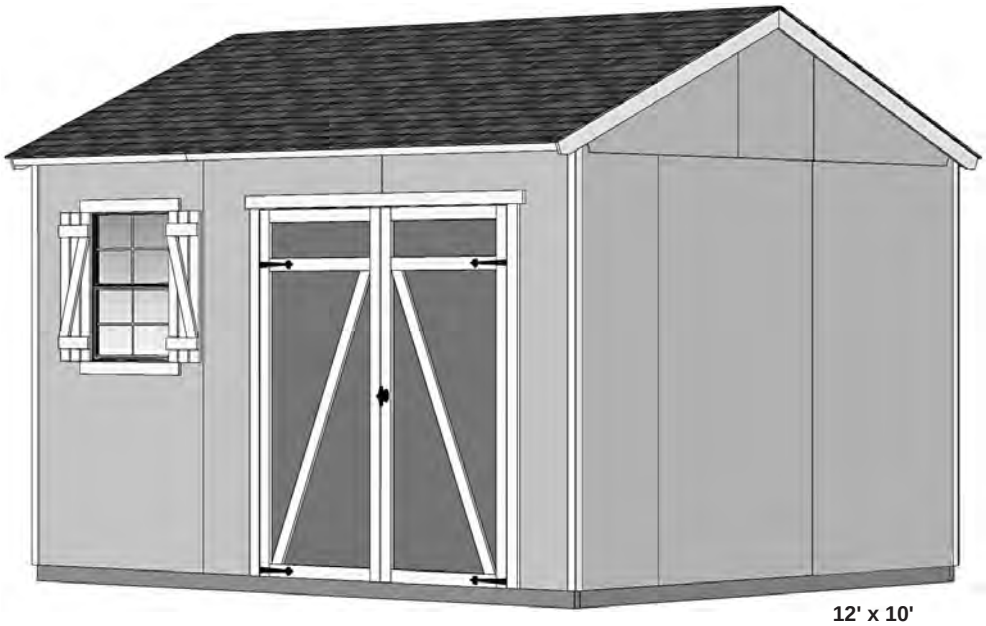

12' x 10'

⚠ *IMPORTANT!* ⚠

READ INSTRUCTIONS THOROUGHLY PRIOR TO BEGINNING ASSEMBLY.

BEFORE YOU BEGIN

- **BUILDING RESTRICTIONS AND APPROVALS**

  Be sure to check local building department and homeowners association for specific restrictions and/ or requirements before building.

- **ENGINEERED DRAWINGS**

  Contact our Customer Service Team if engineered drawings are needed to pull local permits.

- **SURFACE PREPARATION**

  To ensure proper assembly you must build your shed on a level surface.

  Recommended methods and materials to level your shed are listed on page 10.

- **CHECK ALL PARTS**

  Inventory all parts listed on pages 5-8.

- **ADDITIONAL MATERIALS**

  You will need additional materials to complete your shed. See pages 3-4 for required and optional materials and quantities.

******CONTACT OUR CUSTOMER SERVICE TEAM***

IF ANY PARTS ARE MISSING OR DAMAGED***

- Order form and warranty at back of manual -

Call: 1-734-242-6900 email: customerservice@backyardproducts.com

TOOLS

Required

- Phillips Screwdriver
- Drill / Driver
  - 3/8" Drill Bit
  - #2 Philips Drive Bit
- Hammer
- Level
- Pencil
- Tape Measure
- Square or
- Utility Knife
  - Shingle Blades
- Caulk Gun
- Paint Tools
- Safety Glasses
- Ladder

Optional

- Tool Belt/ Nail Pouch
- Tin Snips (for drip edge)
- Chalk Line
- Nail Gun
  - gun nails
- Gloves
- Sawsall

Safety! Always use approved safety glasses during assembly.

HELPFUL REMINDER SYMBOLS

Look for these symbols for helpful reminders throughout this manual.

= Assistance Required; two or more people.

= Ensure squareness.

= Important required step or operation.

= Helpful assembly hint.

= Mark part with pencil.

BEGIN = Beginning of steps for assembly or installation.

FINISH = You have finished the assembly or installation.

= Level

ORIENT LUMBER AND TRIM FOR BEST APPEARANCE

Framing lumber is graded for structural strength and not appearance. Exterior trim is graded for one good side.

Always install the material leaving the best edge and best surface visible. Please remember that these blemishes in no way negatively affect the strength or integrity of our product. (See Fig. A, B, C.)

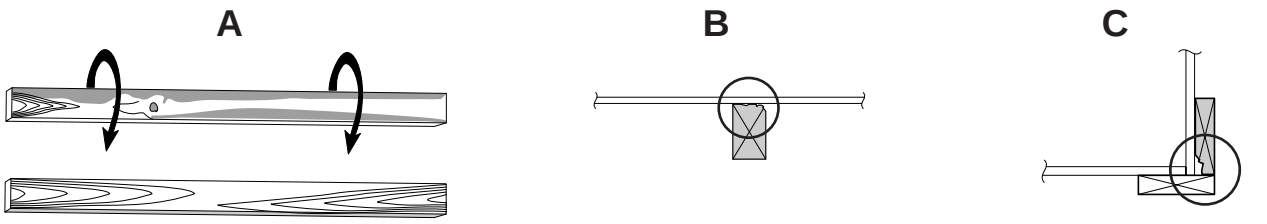

ADDITIONAL MATERIALS

FOUNDATION OR FLOOR MATERIALS

- This shed does not include any floor or leveling materials.
- See the FLOOR LEVELING section on page 10 for recommended methods and suggested materials to properly level your floor, as this will vary depending on your specific site.

WOOD FLOOR FRAME (Not Included)

MATERIAL REQUIRED: ⚠ Use only wood treated for ground contact and fasteners approved for use with treated wood.

☐ **x2** 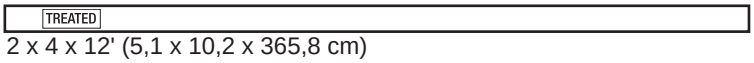

2 x 4 x 12' (5,1 x 10,2 x 365,8 cm)

☐ **x10** 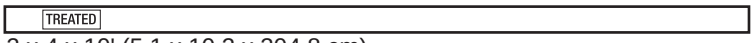

2 x 4 x 10' (5,1 x 10,2 x 304,8 cm)

☐ **x40** 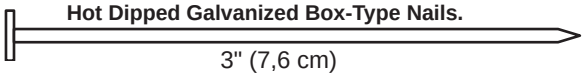
Hot Dipped Galvanized Box-Type Nails.
3" (7,6 cm)

FLOOR PANELS (Not Included)

You will need floor panels and nails to complete your floor.
Floor panel sizes and quantities are shown below.

NOTE: Use a minimum of 5/8" (1,6 cm) Oriented Strand Board (OSB)

☐ **x4** 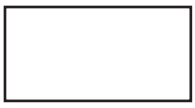
5/8" x 48" x96"
(1,6 x 121,9 x 243,8 cm)

☐ **x1** 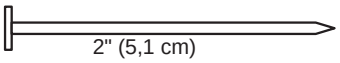
2" (5,1 cm)
1 lb. of 2" (5,1 cm) Hot Dipped Galvanized Box-Type Nails.

REINFORCED WOOD FLOOR FRAME (OPTIONAL)

IMPORTANT! Depending on your specific use you may want to construct a heavy duty floor frame by adding additional floor joists (shown below as shaded). Below is a list of additional materials (not included):

☐ **x3** 2 x 4 x 10' (5,1 x 10,2 x 304,8 cm) Treated Lumber cut to 2 x 4 x 117" (5,1 x 10,2 x 297,2 cm)

☐ **x12** 3" (7,6 cm) hot-dipped galvanized nails

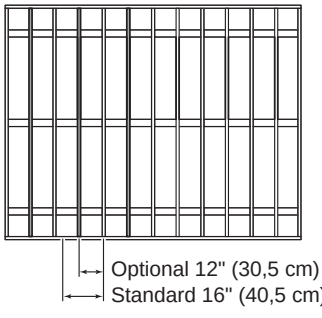

ADDITIONAL MATERIALS

COMPLETING YOUR SHED

You will need these additional materials:

- ☐ **3-TAB SHINGLES (Bundles)..... 6**
- ☐ **PAINT FOR SIDING (Gallons)..... 3**
  Use 100% acrylic latex exterior paint.
  (2) coats recommended.
- ☐ **1" GALVANIZED ROOFING NAILS(lbs)... 3**
  For shingles.
- ☐ **PAINT FOR TRIM .....1 Quart**
  Use 100% acrylic latex exterior paint.
- ☐ **CAULK ..... 3 Tubes**
  Use acrylic latex exterior caulk that is paintable.

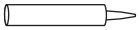

FRAMING NAILS

Boxed Nails	*-Or-*	*Nail Gun Strip/Coil Nails*
☐ **x5 lbs.**		☐ **x350**
☐ **x6 lbs.**		☐ **x1250**

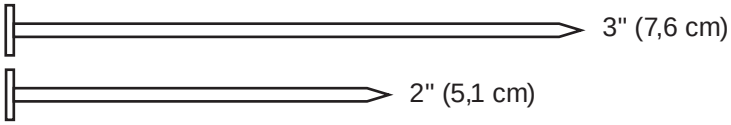

OPTIONAL MATERIALS

- ☐ **DRIP EDGE (Feet)..... 60**
- ☐ **#15 ROOFING FELT (Sq ft. to cover)..... 168**
- ☐ **1" GALVANIZED ROOFING NAILS (lbs).... ¼**
  For roofing felt.

REFER TO THE BACK OF THIS MANUAL AND THE MANUFACTURER'S INSTRUCTIONS FOR INSTALLATION OF SHINGLES, DRIP EDGE AND FELT.

PARTS IDENTIFICATION AND SIZES

Double letter part identification is stamped on some parts.

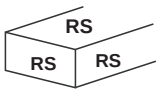

• Check these locations for part stamp.

WOOD SIZE CONVERSION CHART

Nominal Board Size	Actual Size
2 x 4	1-1/2" x 3-1/2" (3,8 x 8,9 cm)
1 x 4	3/4" x 3-1/2" (1,9 x 8,9 cm)
2 x 3	1-1/2" x 2-1/2" (3,8 x 6,3 cm)
1 x 3	3/4" x 2-1/2" (3,8 x 6,3 cm)

10x12'

GABLE 10' x 12' PARTS LIST

INVENTORY YOUR PARTS before you begin.
We suggest sorting parts by the category they are listed in.

WALL

☐	x1	BG	2 x 4 x 11-5/8" (5,1 x 10,2 x 29,5 cm)
☐	x1	AJ	2 x 4 x 12-1/2" (5,1 x 10,2 x 31,8 cm)
☐	x4	AF	2 x 4 x 18-1/8" (5,1 x 10,2 x 46 cm)
☐	x1	PYA	2 x 4 x 19-3/4" (5,1 x 10,2 x 50,2 cm)
☐	x2	JBD	2 x 4 x 20-3/8" (5,1 x 10,2 x 51,8 cm)
☐	x4	AO	2 x 4 x 22-1/2" (5,1 x 10,2 x 57,1 cm)
☐	x4	RL	2 x 4 x 24" (5,1 x 10,2 x 61 cm)
☐	x1	SG	2 x 4 x 34" (5,1 x 10,2 x 86,4 cm)
☐	x1	HVC	2 x 4 x 44-3/8" (5,1 x 10,2 x 112,7 cm)
☐	x2	SP	2 x 4 x 48" (5,1 x 10,2 x 121,9 cm)
☐	x1	AV	2 x 4 x 60-1/2" (5,1 x 10,2 x 153,7 cm)
☐	x1		7/16" x 3-1/4" x 66-3/4" (1,1 x 8,3 x 170,2 cm) *OSB*
☐	x2	AM	2 x 4 x 67" (5,1 x 10,2 x 170,2 cm)
☐	x2	UM	2 x 4 x 68" (5,1 x 10,2 x 172,7 cm)
☐	x4	YFA	2 x 4 x 68-1/2" (5,1 x 10,2 x 174 cm)
☐	x22	AI	2 x 4 x 78-1/2" (5,1 x 10,2 x 199,4 cm)
☐	x3	TJ	2 x 4 x 92-5/8" (5,1 x 10,2 x 235,3 cm)
☐	x6	TP	2 x 4 x 96" (5,1 x 10,2 x 243,9 cm)
☐	x5	AL	2 x 4 x 7" (5,1 x 10,2 x 17,8 cm)
☐	x1	GAA	1 x 3 x 5" (2,5 x 7,6 x 12,7 cm) **Used as a gauge block for 3/4" (1,9 cm) measurement.**

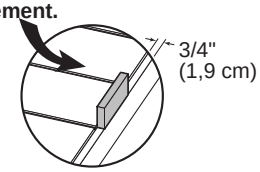

RAFTERS

☐	x12		6 x 24" (15,2 x 61 cm)
☐	x1	TM	2 x 4 x 72" (5,1 x 10,2 x 182,9 cm)
☐	x14	AD	2 x 4 x 65" (5,1 x 10,2 x 165,1 cm)

TRIM

☐	x2	AS	2 x 6 x 49-1/2" (5,1 x 15,2 x 125,8 cm)
☐	x2	AUR	19/32" x 3-1/2" x 71-15/16" (1,5 x 8,9 x 182,7 cm)
☐	x2	AUL	19/32" x 3-1/2" x 71-15/16" (1,5 x 8,9 x 182,7 cm)
☐	x8		3/8" x 1-3/4" x 83-1/2" (1 x 4,5 x 212,1 cm)
☐	x2	VX	2 x 6 x 96" (5,1 x 15,3 x 243,9 cm)

DOORS

☐	x1	AHR	19/32" x 2-1/2" x 62" (1,5 x 6,3 x 157,5 cm)
☐	x1	AHL	19/32" x 2-1/2" x 62" (1,5 x 6,3 x 157,5 cm)
☐	x2	OO	69" (175,3 cm) Door Stiffener
☐	x1	ZJ	19/32" x 2-1/2" x 72" (1,5 x 6,3 x 182,9 cm)

PANEL & DOORS PARTS

NOTE: Panel parts are not stamped with part identification.

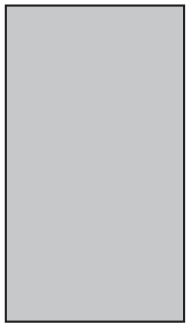

☐ **x7**

3/8 x 48 x 84"
(1 x 121,9 x 213,4 cm)

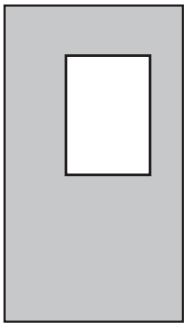

☐ **x1**

3/8 x 48 x 84"
(1 x 121,9 x 213,4 cm)

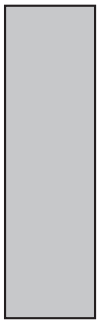

☐ **x2**

3/8 x 23-7/8 x 84"
(1 x 121,9 x 213,4 cm)

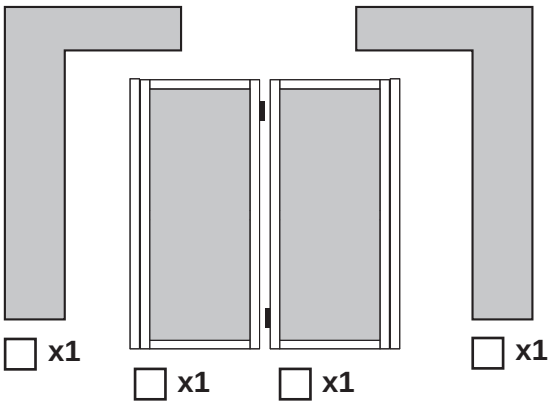

☐ **x1**

☐ **x1**

☐ **x1**

☐ **x1**

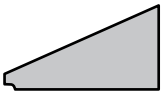

☐ **x2**

3/8" x 23-9/16" x 48"
(1 x 59,9 x 121,9 cm)

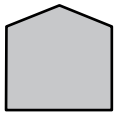

☐ **x2**

3/8" x 23-9/16" x 23-7/8"
(1 x 59,9 x 60,6 cm)



☐ **x2**

3/8" x 23-9/16" x 48"
(1 x 59,9 x 121,9 cm)

ROOF PANELS

Roof panels are 7/16" (1,1 cm) thick.



☐ **x2**

48" x 96"
(121,9 x 243,8 cm)

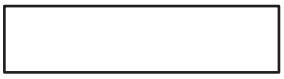

☐ **x2**

23-1/2" x 96"
(59,7 x 243,8 cm)

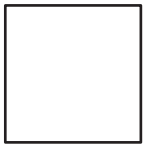

☐ **x2**

47-7/8" x 48"
(121,6 x 121,9 cm)



☐ **x2**

23-1/2" x 47-7/8"
(59,7 x 121,9 cm)

LOFT PARTS

Loft panels are 7/16" (1,1 cm) thick.

☐ **x1** **LW**

2 x 3 x 23-7/8" (5,1 x 7,6 x 60,6 cm)

☐ **x4** **RL**

2 x 4 x 24" (5,1 x 10,2 x 61 cm)

☐ **x1** **PT**

2 x 3 x 96" (5,1 x 7,6 x 243,8 cm)

☐ **x4** **TP**

2 x 4 x 96" (5,1 x 10,2 x 243,8 cm)

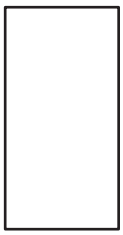

☐ **x1**

15-7/8" x 36" (40,3 x 91,4 cm)



☐ **x1**

36" x 96" (91,4 x 243,8 cm)

SHELVING PARTS

Shelf panels are 7/16" (1,1 cm) thick.

☐ x1 **BC**
1 x 3 x 23-78"
(2,5 x 7,6 x 60,6 cm)

☐ x1 **BE**
1 x 3 x 96" (2,5 x 7,6 x 243,9 cm)

☐ x6 **AC**
2 x 3 x 10"
(5,1 x 7,6 x 25,4 cm)

☐ x1 **JS**
1 x 4 x 23-78"
(2,5 x 10,2 x 60,6 cm)

☐ x1 **KP**
1 x 4 x 96" (2,5 x 10,2 x 243,9 cm)

☐ x1
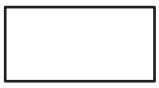
7/16 x 11-1/2 x 23-7/8"
(1,1 x 29,2 x 60,6 cm)

☐ x1
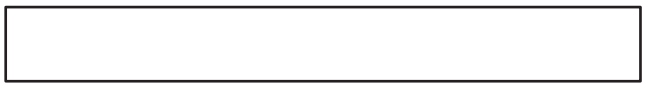
7/16 x 11-1/2 x 96"
(1,1 x 29,2 x 243,9 cm)

WORKBENCH & PEGBOARD PARTS LIST

☐ x1 **BA**
1 x 4 x 20-1/2" (2,5 x 10,2 x 52,1 cm)

☐ x1 **KP**
1 x 4 x 96" (2,5 x 10,2 x 243,9 cm)

☐ x1

23-7/8" x 23-7/8"
(60,6 x 60,6 cm)
PEGBOARD

☐ x1
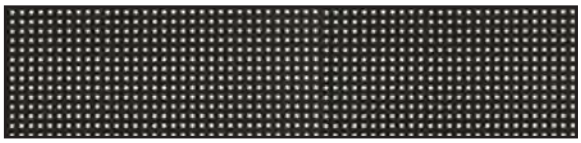
23-7/8" x 96" (1,1 x 60,6 x 243,9 cm) *PEGBOARD*

☐ x1
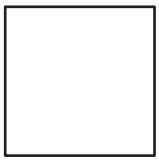
7/16 x 19-1/2 x 23-7/8"
(1,1 x 49,5 x 60,6 cm)

☐ x1

7/16 x 19-1/2 x 92-1/2" (1,1 x 49,5 x 235 cm)

☐ x1 **BC**
1 x 3 x 23-78" (2,5 x 7,6 x 60,6 cm)

☐ x1 **BE**
1 x 3 x 96" (2,5 x 7,6 x 243,9 cm)

☐ x6 **LR**
2 x 3 x 19"
(5,1 x 7,6 x 48,3 cm)

☐ x5
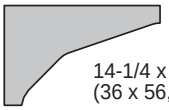
14-1/4 x 22-1/4"
(36 x 56,5 cm)

FASTENER/HARDWARE BAG (Shown Actual Size)

☐ x155
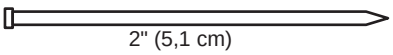
2" (5,1 cm)

☐ x85
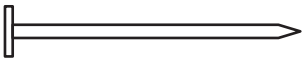
1-1/2" (3,8 cm)

☐ x90

3" (7,6 cm)

☐ x25
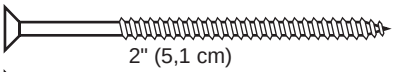
2" (5,1 cm)

☐ x70

1-1/4" (3,2 cm)

☐ x85

3/4" (1,9 cm)

☐ x12

1/2" (1,3 cm)

NOTE:
If you are using a nail gun, nails may be used where screws are shown for quicker assembly. Length of nail must match screw length.

WINDOW AND TRIM PARTS

☐ **x1**

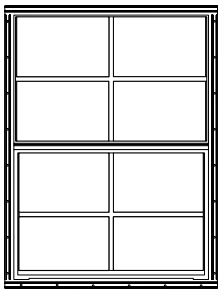

☐ **x4** **DF**
19/32" x 3" x 8-1/2" (1,5 x 7,6 x 21,6 cm)

☐ **x1** **BWR**
19/32" x 3" x 21" (1,5 x 7,6 x 53,3 cm)

☐ **x2** **AH**
19/32" x 2-1/2" x 26-5/8"
(1,5 x 7,6 x 67,6 cm)

☐ **x6** **AZ**
19/32" x 3" x 30-1/8" (1,5 x 7,6 x 76,5 cm)

☐ **x1** **BWL**
19/32" x 3" x 21" (1,5 x 7,6 x 53,3 cm)

☐ **x2** **DT**
19/32" x 2-1/2" x 28-1/8"
(1,5 x 7,6 x 71,4 cm)

Other HARDWARE (Not Actual Size)

☐ **x4**

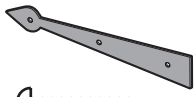

☐ **x12**



3/4" (1,9 cm)

☐ **x**



☐ **x1**

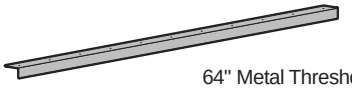

64" Metal Threshold

☐ **x1**

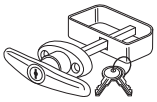

☐ **x2**

1-1/2" (3,8 cm)

☐ **x2**

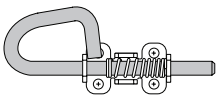

☐ **x8**

3/4" (1,9 cm)

CONCRETE FOUNDATION

If you choose to install your kit on a concrete slab refer to the diagram below.
Attach the sill plates on the foundaton as shown, and continue on to page 13.

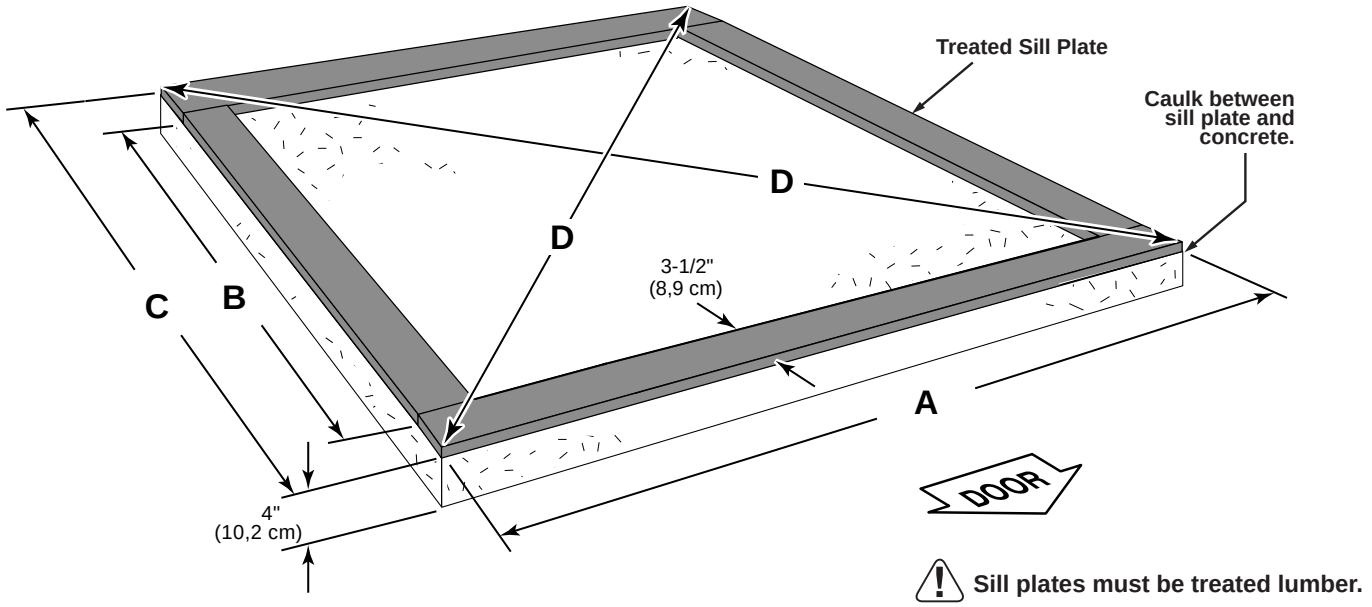

Sill plates must be treated lumber.

Building Size	Actual Floor Size	A	B	C	D
10'x12' (304,8 x 365,8 cm)	10' x 12' (304,8 x 365,8 cm)	144" (365,8 cm)	113" (287 cm)	120" (304,8 cm)	187-7/16" (476,1 cm)

10' x 12' Building Requires:

☐ **x2 2 x 4 x 10' (5,1 x 10,2 x 304,8 cm)** Cut to: 117" (297,2 cm)

☐ **x2 2 x 4 x 12' (5,1 x 10,2 x 365,8 cm)**

☐ **x1 Caulk**

Allow new concrete slabs to cure for at least seven (7) days.

- **A treated 2 x 4 (5,1 x 10,2 cm) sill plate is required when installing your shed on concrete. Purchase full length treated lumber, or butt shorter pieces end-to-end and seal seams with caulk.**
- **Use a high quality exterior grade caulk beneath all sill plates.**
- **Fasten 2 x 4 (5,1 x 10,2 cm) sill plates to slab using approved concrete anchors (fasteners not included).**
- **Check local code for concrete foundation requirements.**

OPTIONAL WOOD FRAME FLOOR LEVELING OPTIONS

There are multiple ways to level your floor frame. Our recommended leveling method is shown below.
Leveling materials are not included in this kit.

PREFERRED METHOD - 4x4 TREATED RUNNERS (Typical for 10' x 12' Kit)

Runners are generally 12" (30,5 cm) from ends of floor frame and under seams.

Measurements to centers of 4x4's.

- **3" Screws angled into 4x4.**
- **(2) at each point frame and 4x4 touch.**

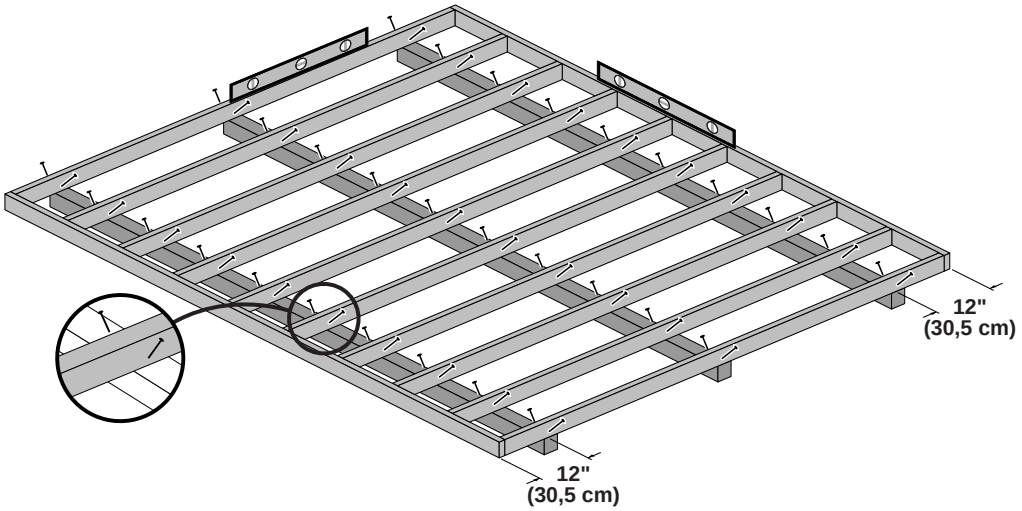

⚠ **FLOOR FRAME NOT INCLUDED**

MATERIAL REQUIRED:

10' x 12' ☐ **x3** 4 x 4 x 12' (10,2 x 10,2 x 305 cm) Treated Lumber

Fasteners for Frame to 4x4:

(3" Screws shown as one option.)
Minimum 3" screws / exterior grade.

☐ **x60** 3" (7,6 cm)

⚠ **Use only wood treated for ground contact and fasteners approved for use with treated wood.**

⚠ **Always support frame seams.**

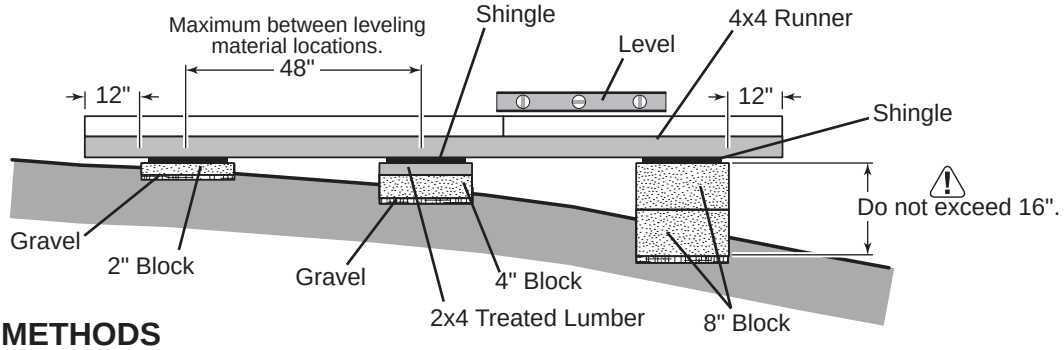

LEVELING METHODS

- **Level under 4x4 runners only.**
- **Locate leveling material 12" from ends of runners and no more than 48" apart.**
- **Asphalt shingles should be used between 4x4 runners and blocks or treated lumber. Never use shingles in direct contact with ground.**
- **For best results and aiding in water drainage use gravel under each concrete block.**

LEVELING MATERIALS

- ☐ **Gravel**
- ☐ **Solid Masonry Blocks in 1", 2", 4" or 8" thickness**
- ☐ **2x4 Treated Lumber**
- ☐ **Asphalt Shingles**

⚠ **Leveling higher than 16" not recommended.**

LEVELING & SQUARING THE FLOOR FRAME (Not Included)

STOP!

LEVEL AND SQUARE FLOOR FRAME

Before attaching floor decking, it is important to level and square the floor frame.
A level and square floor frame is required to correctly construct your shed.

STOP!

See page 10 for the preferred floor leveling method.

BEGIN

Use a level and ensure the frame is level before applying floor panels.

1 Check for frame squareness by measuring diagonally across the corners.
If the measurements are the same, the frame is square.

- The diagonal measurement for 10' x 12' will be approximately **187-7/16" (476,1 cm) (Fig. A)**.

2 After the frame is level and square, secure one side of frame to 4x4 runners using one fastener at ends of each runner. At the opposite end of the frame, secure the frame to 4x4 runners with one fastener at the ends of each runner, ensuring that the frame remains square.
Fasten the frame to the 4x4 runners with (2) 3" screws at each connection **(Fig. B).**

4x4 runners are generally installed 12" (30,5 cm) from ends of floor frame and under any seams.

Fig. A
10' x 12'

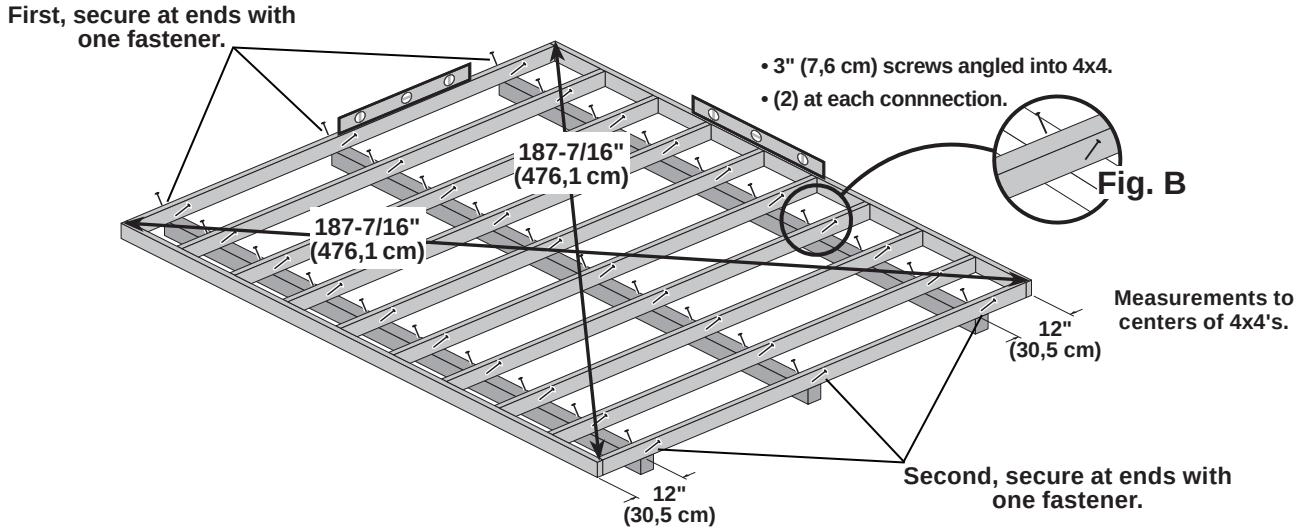

FINISH

Your floor frame is now level.

⚠ *IMPORTANT!*

STOP! **Ensure the floor frame is level after installing floor panels. Re-level if needed.**

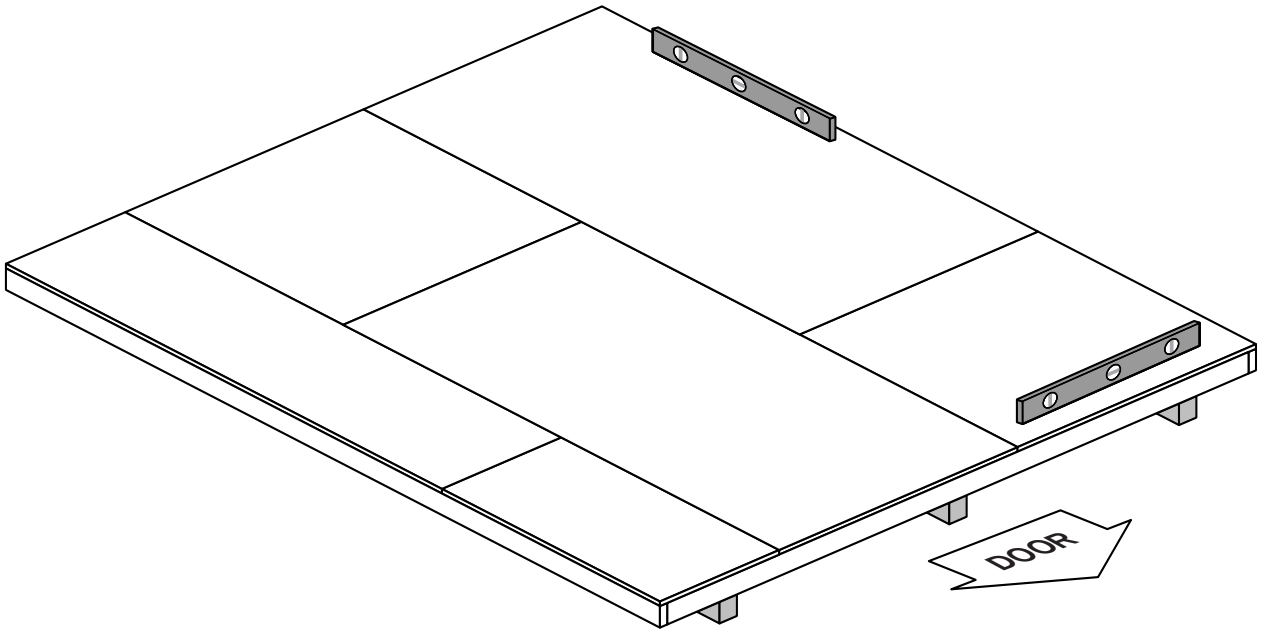

HINT:

- **The floor should used as a stable work surface for wall construction.**
- **Organize your assembly procedure during the build process to avoid over-handling of the walls.**

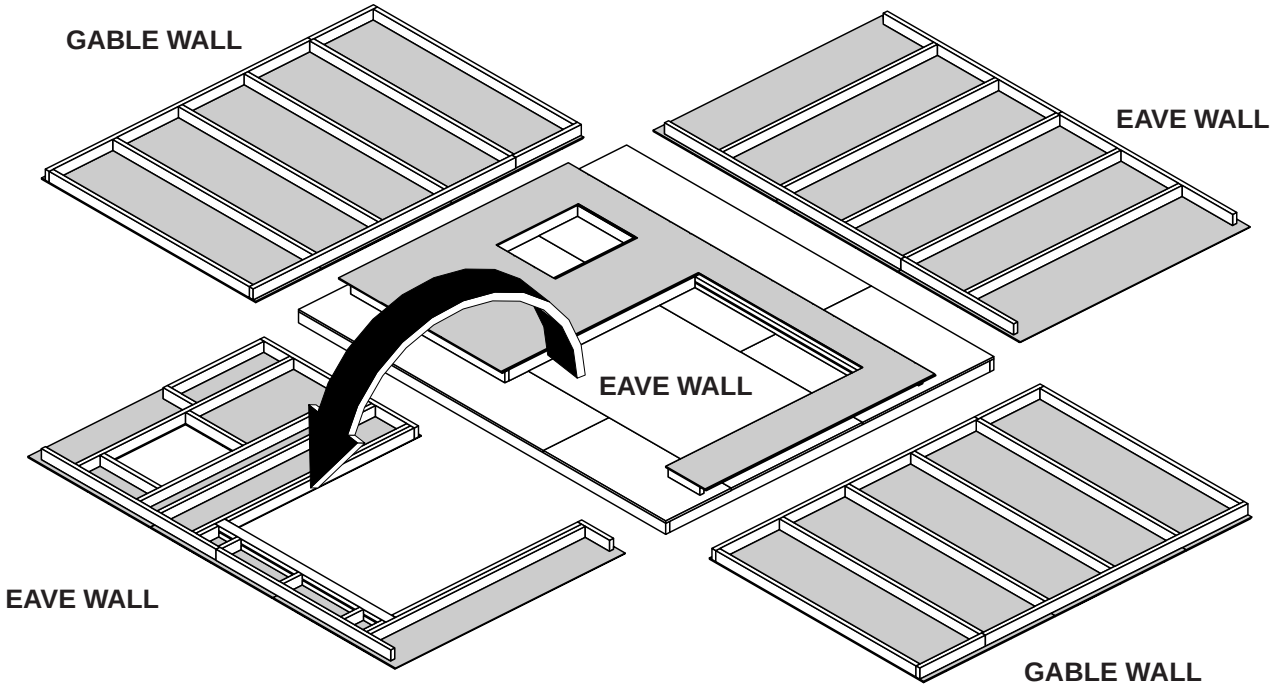

DOOR HEADER

Assemble this door header before building any walls!

Any wall with a door will require this assembly.

PARTS REQUIRED:

x2 **AM**
2 x 4 x 67" (5,1 x 10,2 x 170,2 cm)

x1
7/16 x 3-1/4 x 66-3/4" (1,1 x 8,3 x 170,2 cm) *OSB*

x18
3" (7,6 cm)

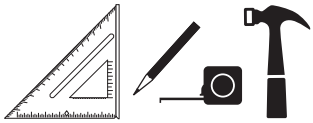

BEGIN

1 Place (1) **AM** and *OSB* end-to-end on flat surface, flush in middle. Center ***OSB*** on top of **AM**.

Fasten together with 3" nails in the pattern shown.

2 Flip header assembly over and nail as shown on the other side.

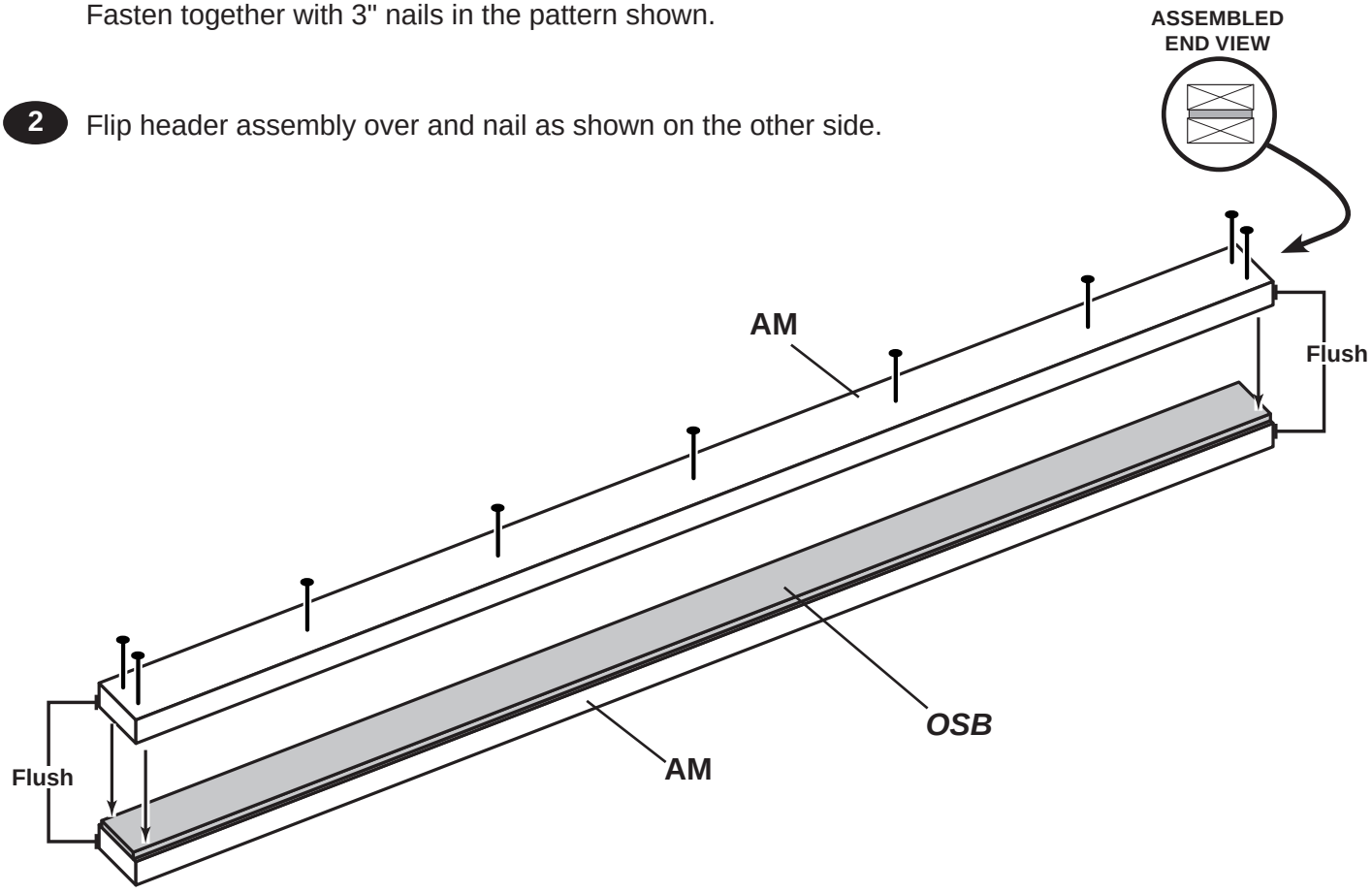

FINISH

Your door header is now assembled.

WALL PANEL INSTALLATION HINTS & EXAMPLES

PARTS REQUIRED:

x40 — 2" (5,1 cm)

x1 — 3/8 x 48 x 84" (1 x 121,9 x 213,4 cm)

GAA 3/4" GAUGE BLOCK

2x3" TEMP. SPACER

Ensure your wall is square by installing one panel and squaring frame.

Install all wall panels with the primed side facing up.

BEGIN

1 Place a **48" X 84"** panel on the wall frame, as shown.
Locate the panel 1-1/2" above the top plate.
Use a 2 x 3 as a gauge block for the 1-1/2" top overhang measurement.
Use the gauge block to mark the 3/4" side measurement on the wall stud.
Secure panel with (2) 2" nails in the corners **(Fig. A).**

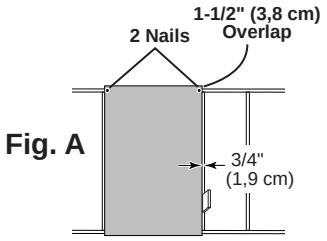

Fig. A

2 Move to the opposite end. Using the long edge of the panel as a lever, move the panel side-to-side until you have a 3/4" measurement on the wall stud.
Secure corner with (2) 2" nails **(Fig. B)**.
Secure panel with 2" nails spaced 6" apart on edges and 12" apart inside panel.

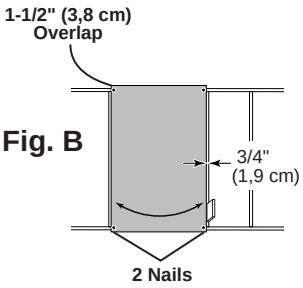

Fig. B

For squareness maintain 3/4" and 1-1/2" measurement along panel edge.

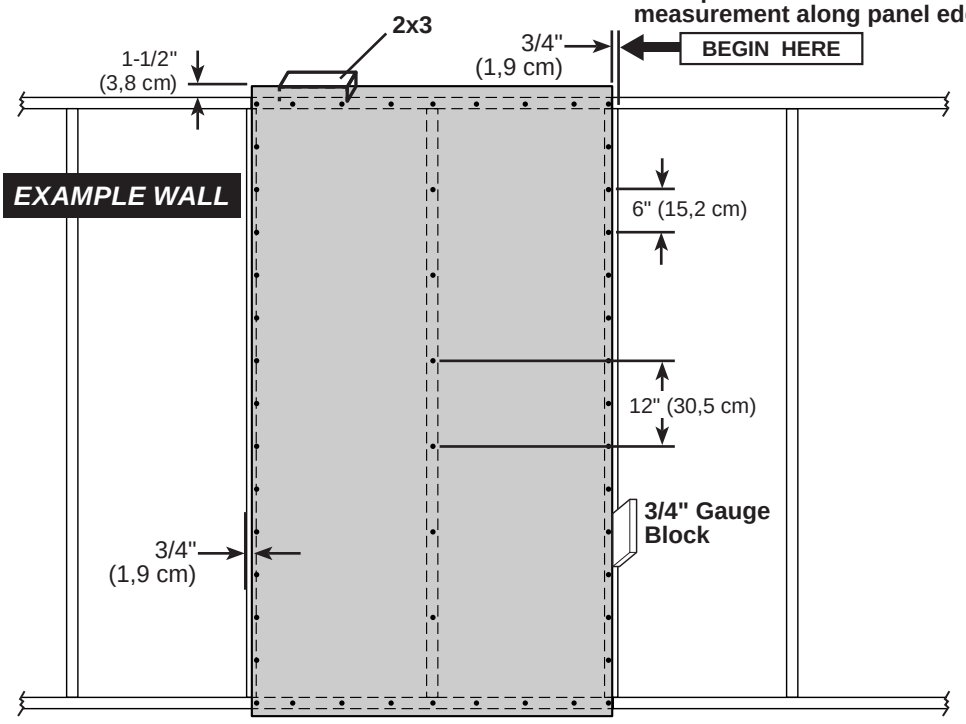

12' FRONT WALL

PARTS REQUIRED:

- x5 **AL** — 2 x 4 x 7" (5,1 x 10,2 x 17,8 cm)
- x1 **Pre Assembled Header**
- x1 **SG** — 2 x 4 x 34" (5,1 x 10,2 x 86,4 cm)
- x1 **AV** — 2 x 4 x 60-1/2" (5,1 x 10,2 x 153,7 cm)
- x2 **UM** — 2 x 4 x 68" (5,1 x 10,2 x 172,7 cm)
- x2 **YFA** — 2 x 4 x 68-1/2" (5,1 x 10,2 x 174 cm)
- x5 **AI** — 2 x 4 x 78-1/2" (5,1 x 10,2 x 199,4 cm)

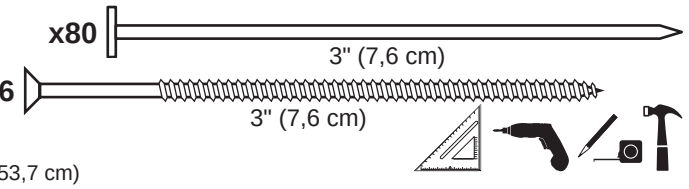

- x1 **BG** — 2 x 4 x 11-5/8" (5,1 x 10,2 x 29,5 cm)
- x1 **AJ** — 2 x 4 x 12-1/2" (5,1 x 10,2 x 31,8 cm)

BEGIN

1. Arrange parts on edge on floor, as shown. Measure and mark from end of boards. Orient **Pre Assembled Header** on flat side **(Fig. A)**. Secure parts with (2) 3" nails at each connection.
2. Fasten (3) middle parts **AL** to **Pre Assembled Header** with (2) 3" screws **(Fig. B)**. Secure parts **AL** to top plates with (2) 3" nails at each connection and (4) 3" nails at seam.

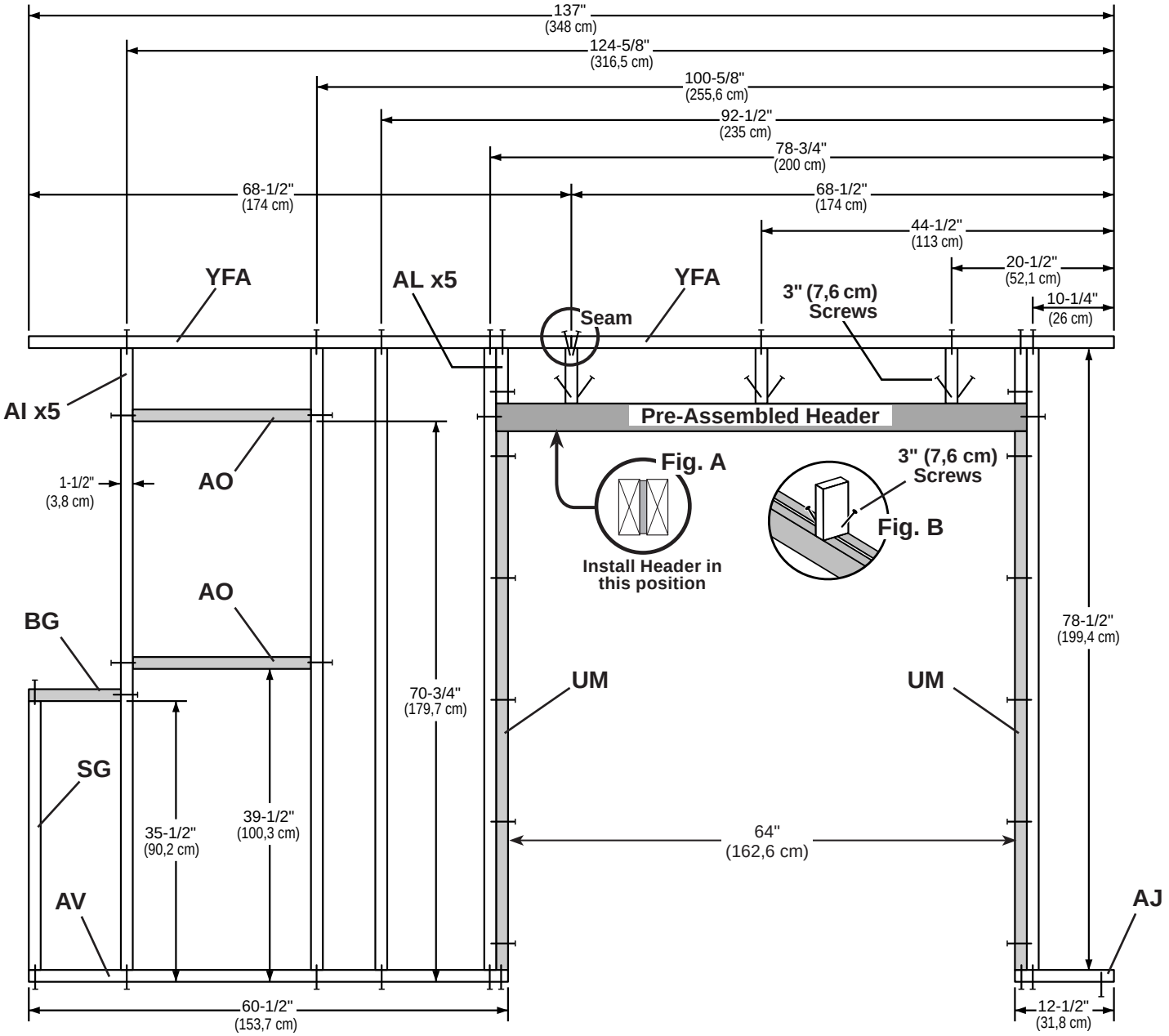

12' FRONT WALL

PARTS REQUIRED:

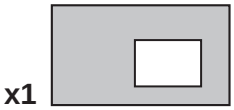

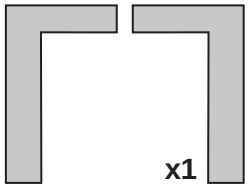

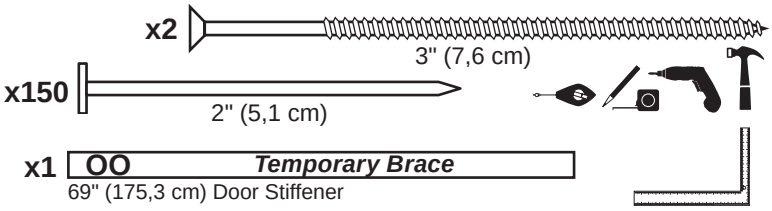

x1 **OO** ***Temporary Brace***
69" (175,3 cm) Door Stiffener

3

Install the left door panel on wall frame, 1-1/2" from the top plate.
Use a 2x4 spacer for consistent measurement.
Secure panel with 2" nails spaced 6" apart on edges.

4

Install the right door panel flush to installed panel, as shown.
Ensure 64" (162,6 cm) door measurement.
Use part **OO** as a temporary brace.
Secure with with (2) 3" screws.

Secure panel with 2" nails spaced 6" apart on edges.

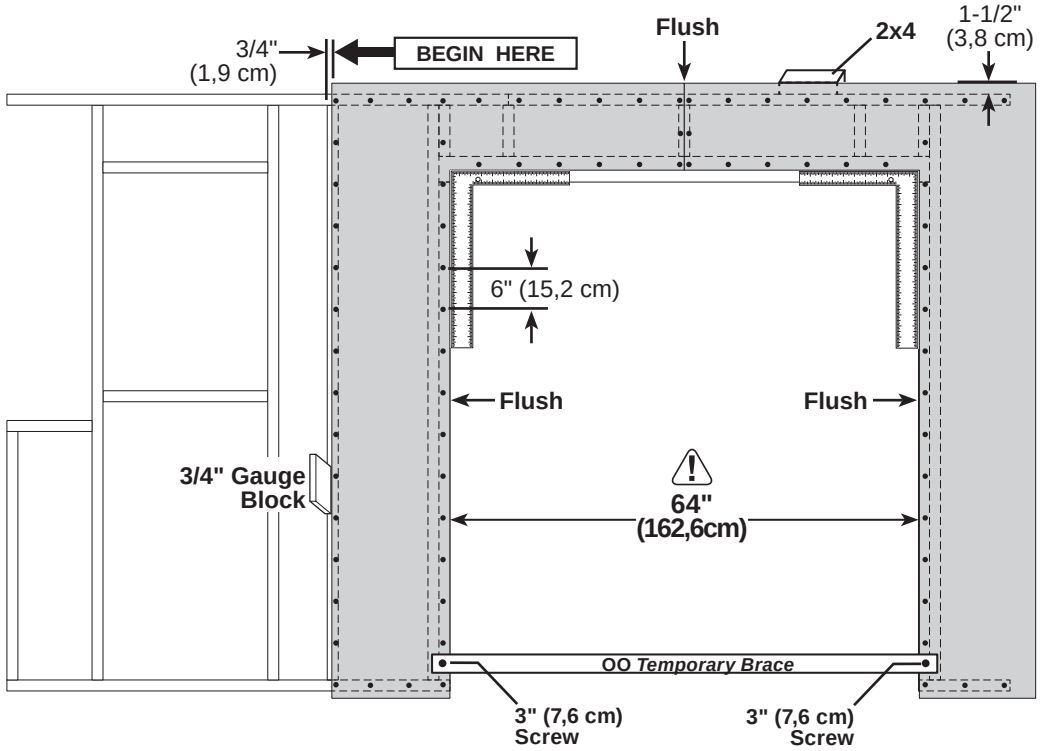

5

Install **48" x 84"** window cutout panel flush to installed panel and 1-1/2" from the top plate.

Secure panel with 2" nails spaced 6" apart on edges and 12" apart inside panel.

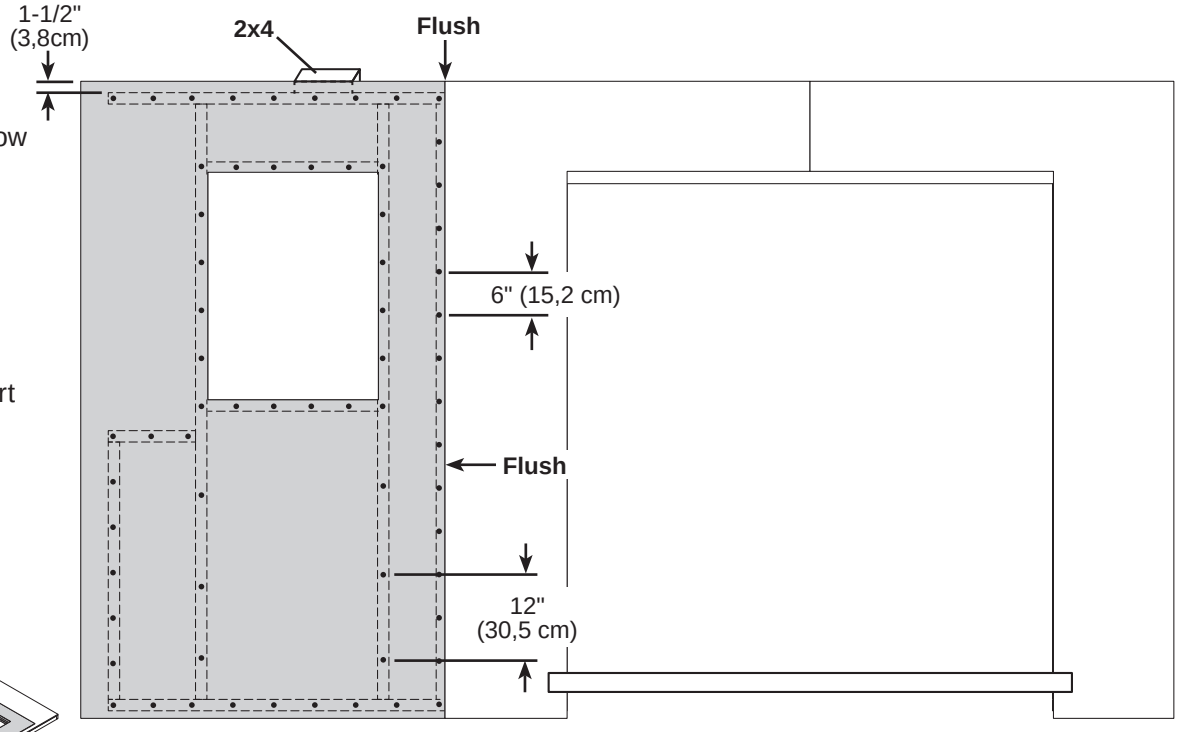

FINISH

Your 12' front wall is now assembled.
Carefully flip the wall over.

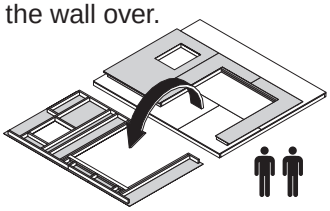

10' GABLE WALL

PARTS REQUIRED:

x2 **RL**
2 x 4 x 24" (5,1 x 10,2 x 61 cm)

x6 **AI**
2 x 4 x 78-1/2" (5,1 x 10,2 x 199,4 cm)

x2 **TP**
2 x 4 x 96" (5,1 x 10,2 x 243,8 cm)

x28

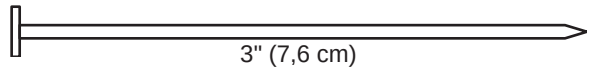

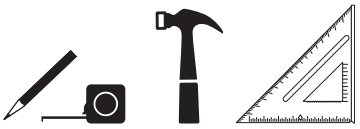

Build (2) identical 10' gable walls.

BEGIN

1 Arrange parts on edge on floor as shown. Measure and mark from end of boards. Secure with (2) 3" nails at each connection and (4) 3" nails at seams.

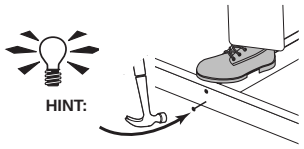

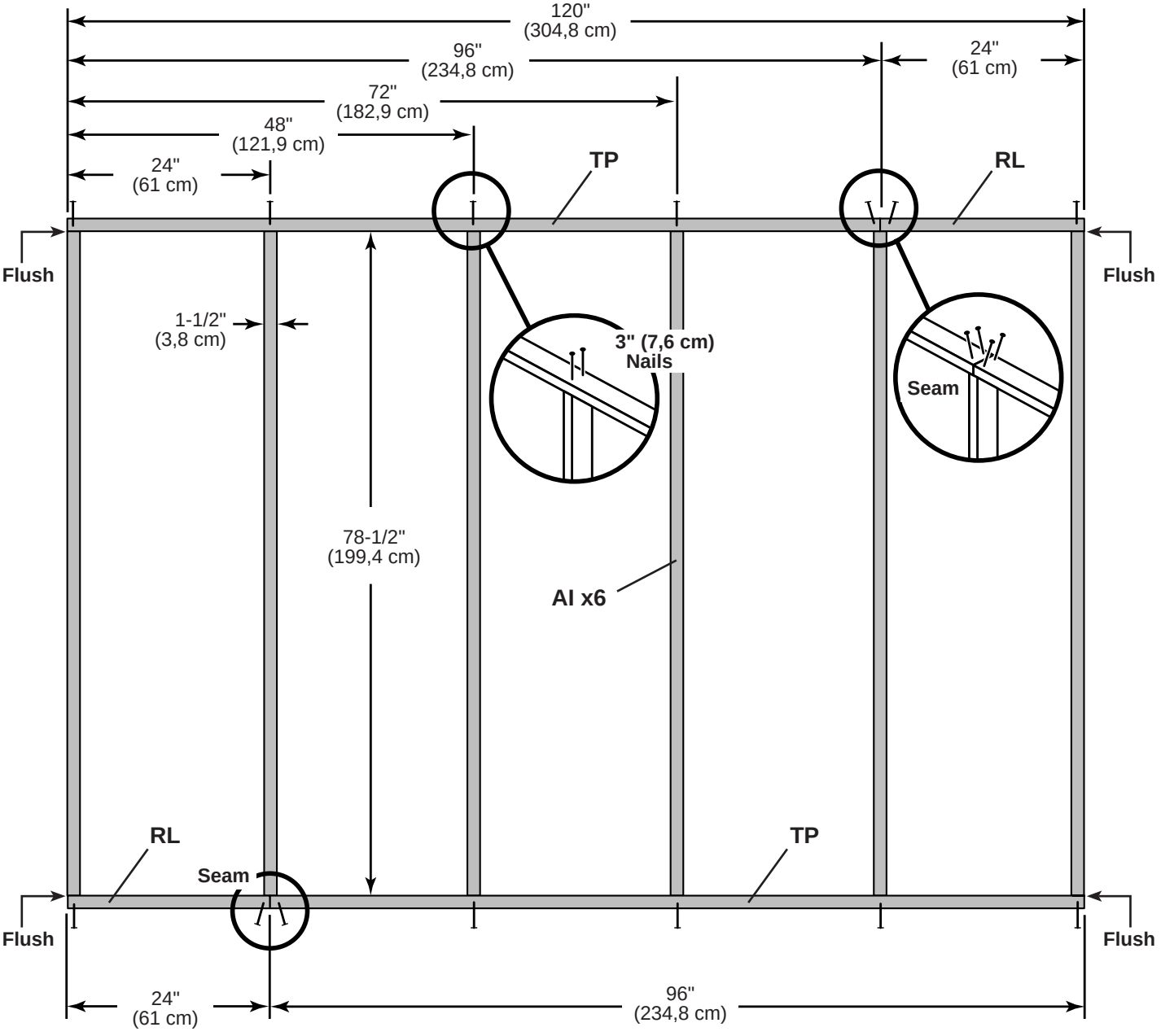

10' GABLE WALL

PARTS REQUIRED:

x136 — 2" (5,1 cm)

x1 — 23-7/8" x 84" (60,6 x 213,4 cm)

x2 — 48 x 84" (121,9 x 213,4 cm)

2

Install **48" x 84"** panel 1-1/2" from the top plate.

Use a 2x3 spacer for consistent measurement.

Secure panel with 2" nails spaced 6" apart on edges and 12" inside panel.

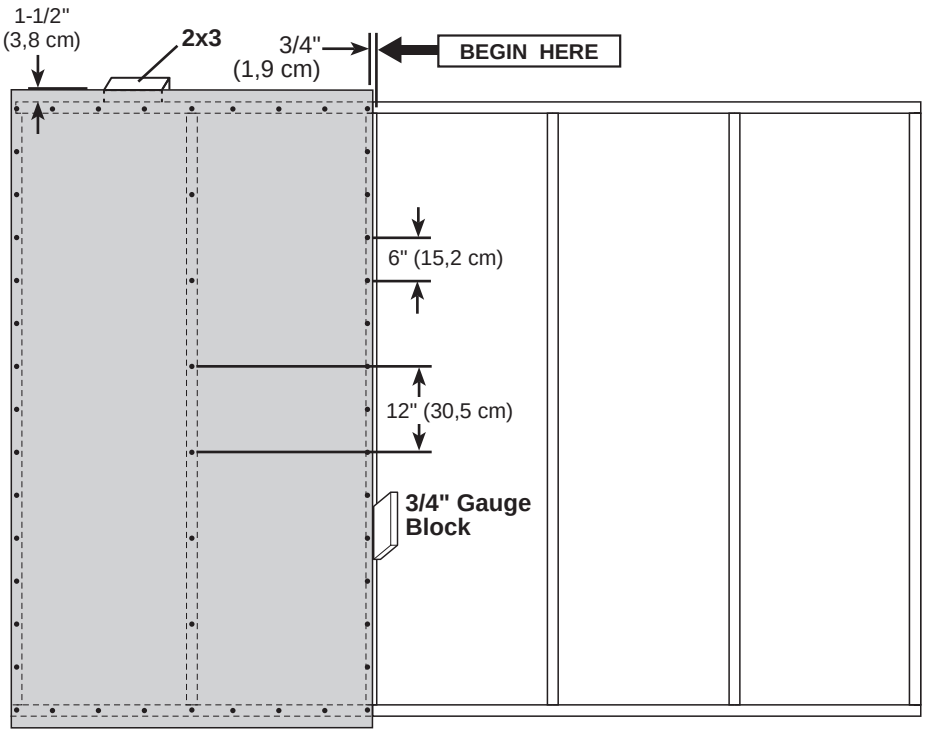

3

Install the **48" x 84"** and (2) **23-7/8" x 84"** panels flush to installed panels.

Locate panels 1-1/2" from the top plate.

Secure with 2" nails spaced 6" apart on edges and 12" apart inside panel.

Your first 10' gable wall is now assembled.
Carefully flip the wall over.

Repeat steps to build your second 10' gable wall.

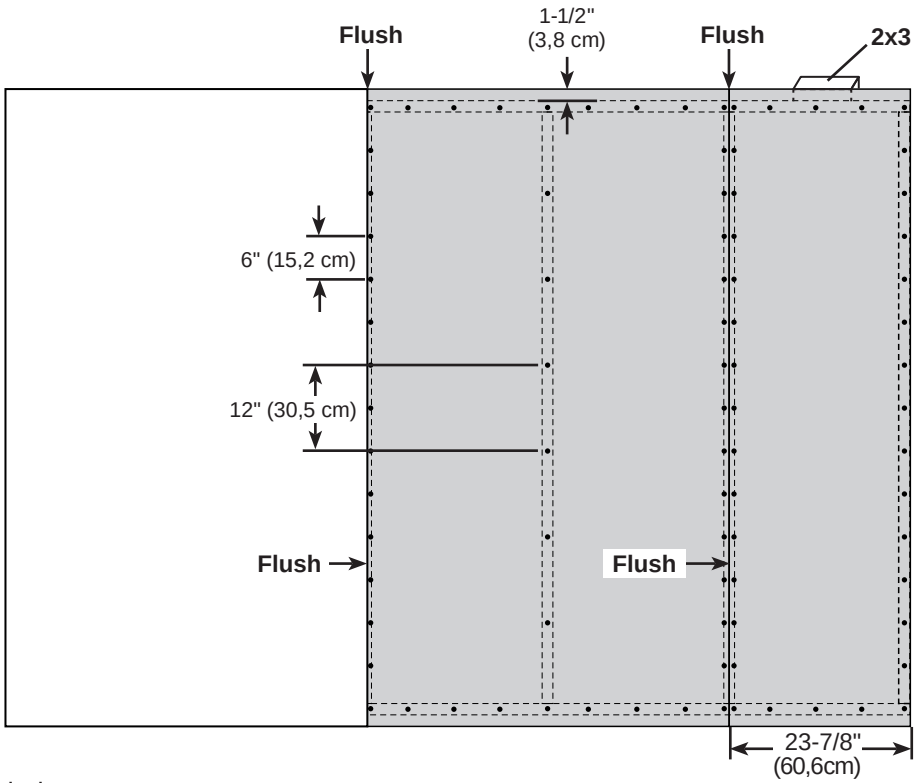

FINISH

Your (2) 10' gable walls are now assembled.
Carefully flip the wall over.

12' BACK WALL

PARTS REQUIRED:

x24 — 3" (7,6 cm)

x1 **HVC** — 2 x 4 x 44-3/8" (5,1 x 10,2 x 112,7 cm)

x1 **TJ** — 2 x 4 x 92-5/8" (5,1 x 10,2 x 235,3 cm)

x2 **YFA** — 2 x 4 x 68-1/2" (5,1 x 10,2 x 174 cm)

x5 **AI** — 2 x 4 x 78-1/2" (5,1 x 10,2 x 199,4 cm)

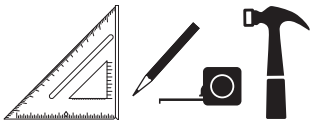

BEGIN

1 Arrange parts on edge on floor. Measure and mark from end of boards. Secure with (2) 3" nails at each connection and (4) 3" nails at seams.

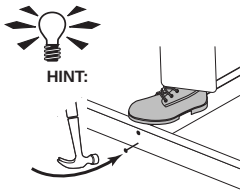

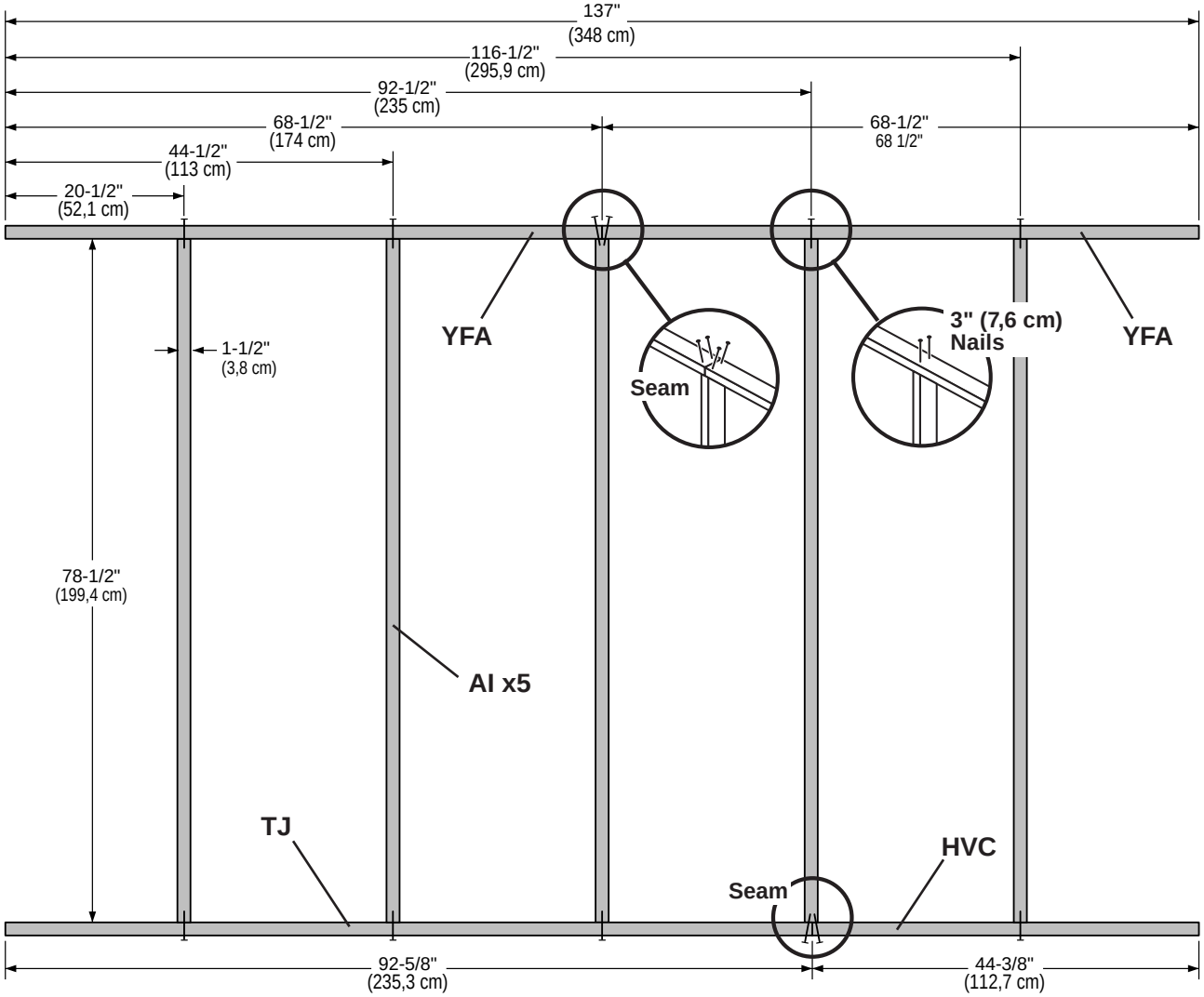

12' BACK WALL

PARTS REQUIRED:



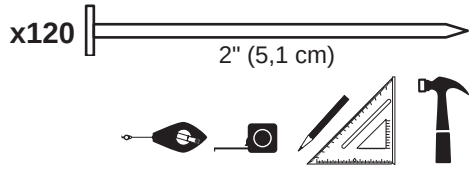

2

Install **48" x 84"** panel 1-1/2" from the top plate.

Use a 2x3 spacer for consistent measurement.

Secure panel with 2" nails spaced 6" apart on edges and 12" inside panel.

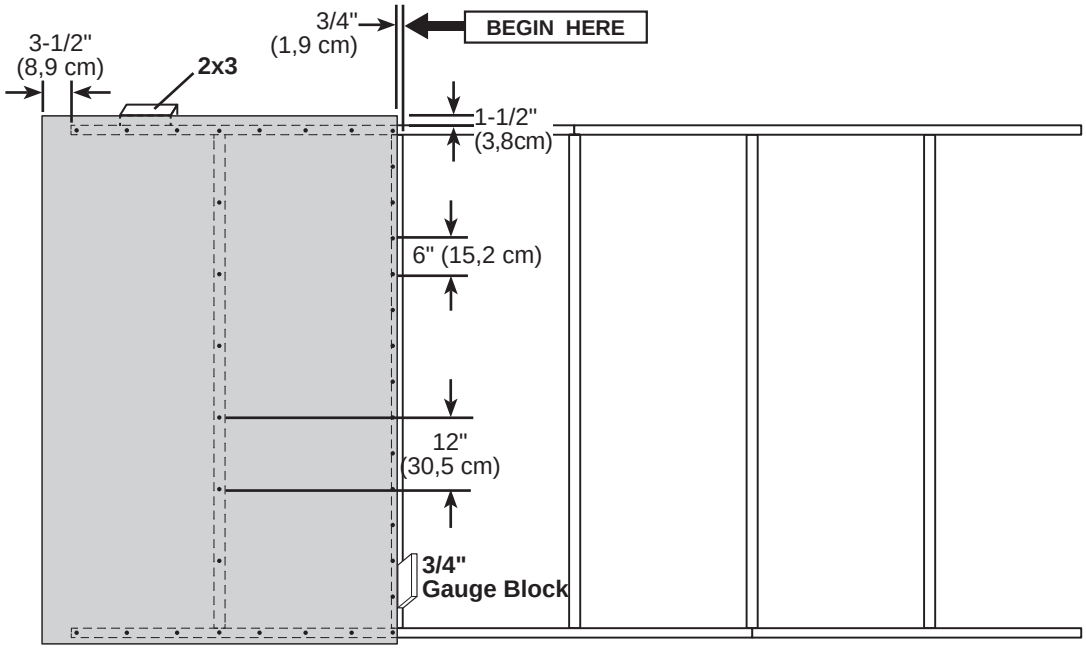

3

Install (2) **48" x 84"** panels flush to installed panels.

Locate panels 1-1/2" from the top plate.

Secure with 2" nails spaced 6" apart on edges and 12" apart inside panel.

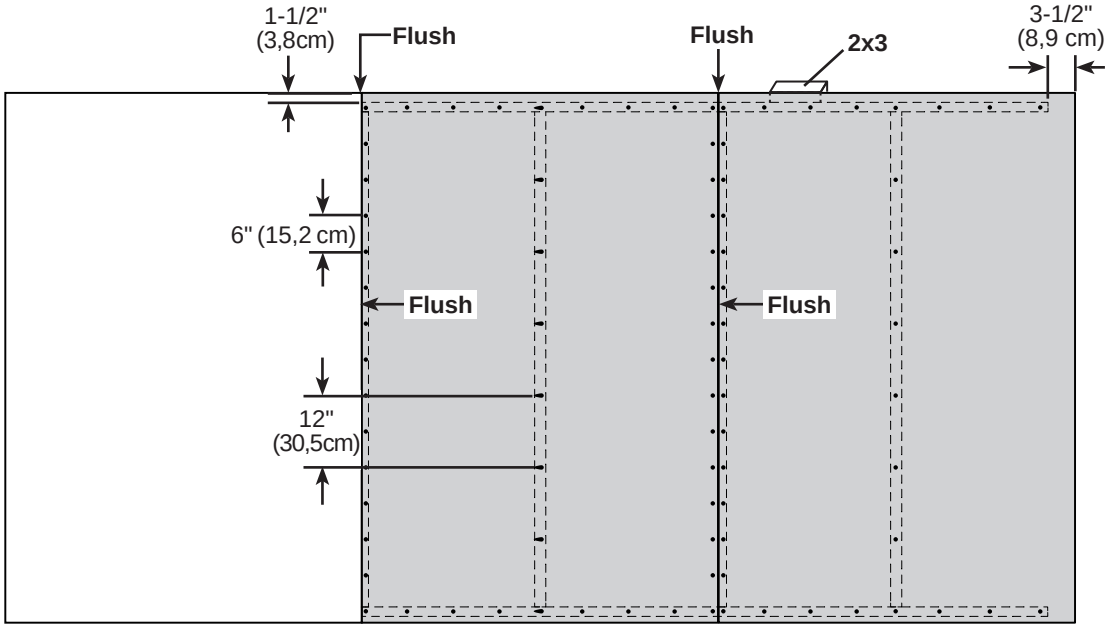

FINISH

Your 12' back wall is now assembled.

Carefully flip the wall over.

STANDING YOUR WALLS

The following steps show how to stand and secure your walls for a 10' x 12' shed.

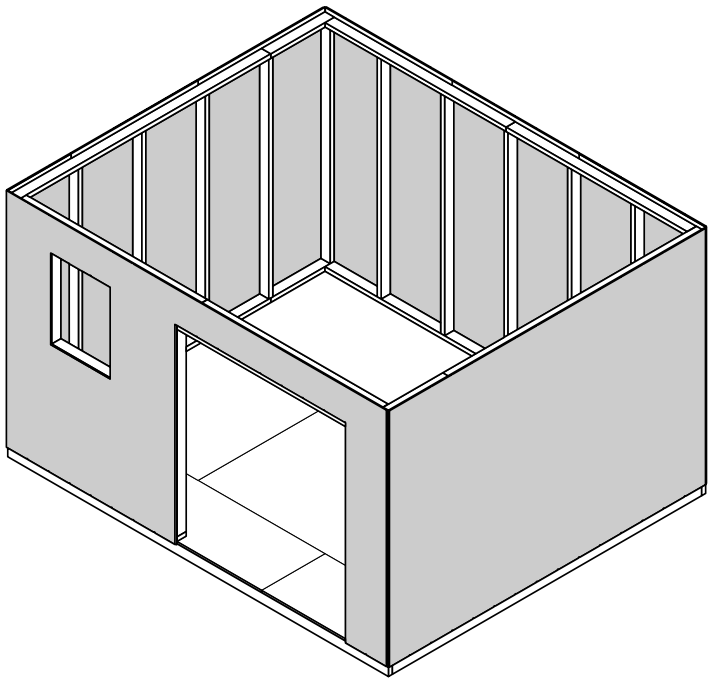

10' WALL INSTALLATION

PARTS REQUIRED:

x1 **OO**
69" (175,3 cm) Door Stiffener



x10 3" (7,6 cm)

x2 3" (7,6 cm)

x23 2" (5,1 cm)

BEGIN

Center 10' wall on the 120" (304,8 cm) floor dimension.

1-1/2" (3,8 cm) overlap is to the top.

Use **OO** as a temporary brace.
Secure with (2) 3" screws.

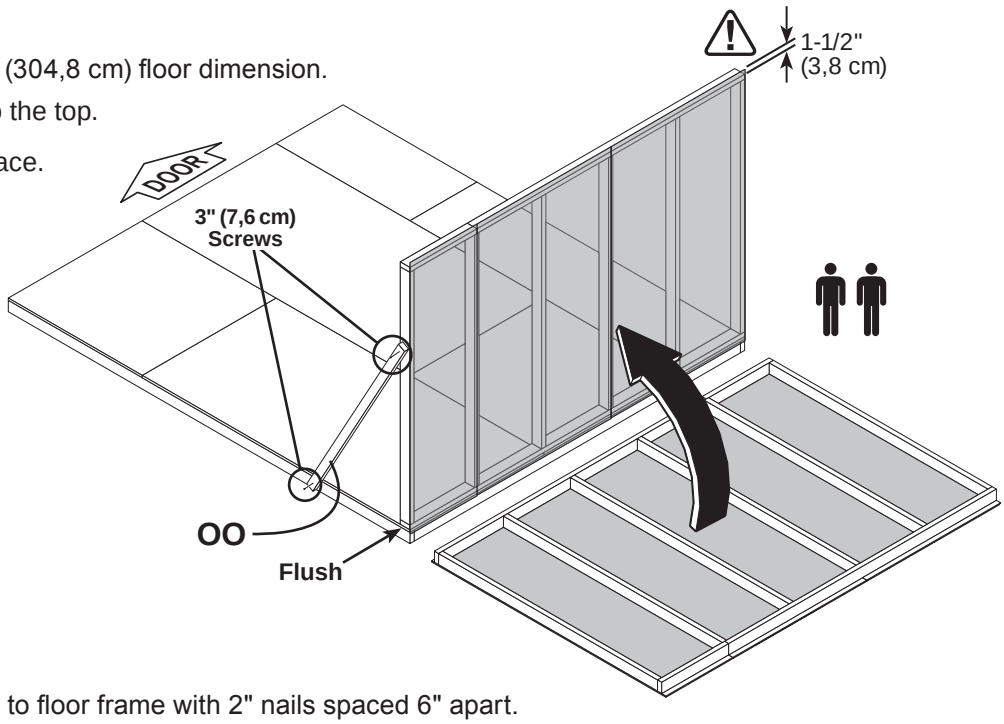

2 Secure lower edge of panel to floor frame with 2" nails spaced 6" apart. Angle nails into floor frame **(Fig. A)**.

Secure wall bottom plates to floor with 3" nails **(Fig. A)**.

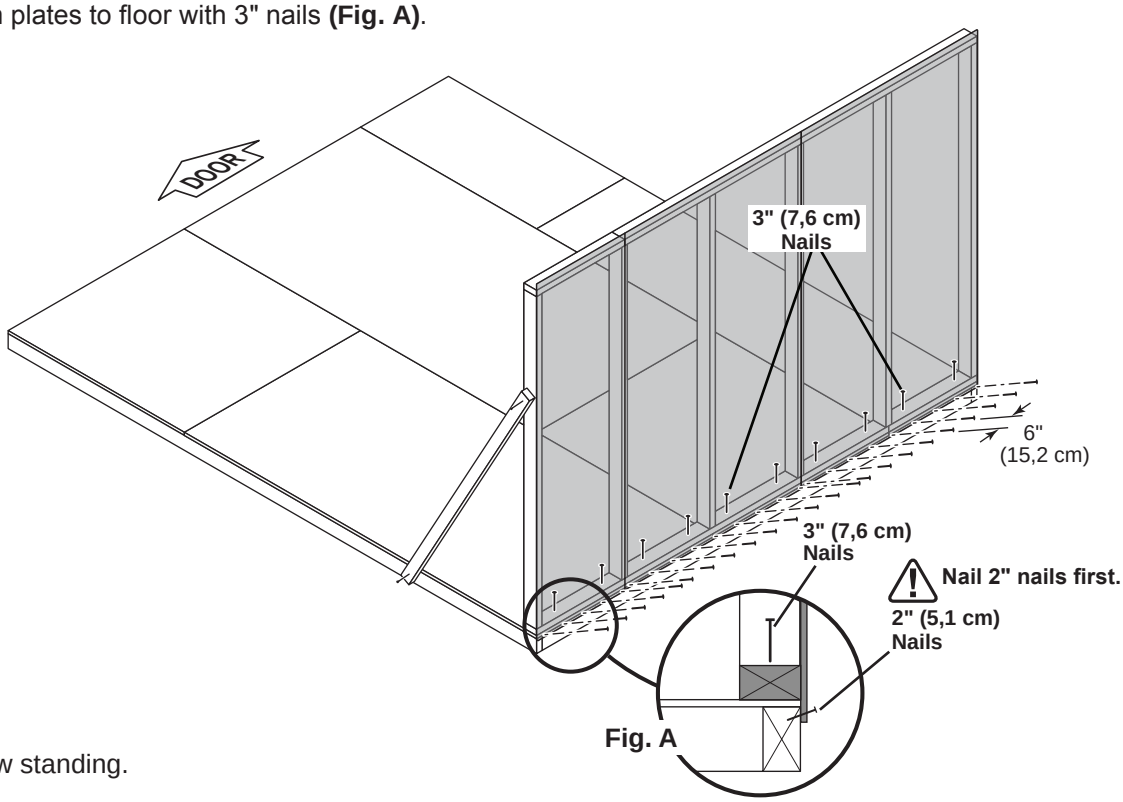

Fig. A

FINISH

Your 10' wall is now standing.

12' WALL INSTALLATION

PARTS REQUIRED

x1 — 3" (7,6 cm)

x2 — 2" (5,1 cm)

x27 — 2" (5,1 cm)

x13 — 1-1/2" (3,8 cm)

x12 — 3" (7,6 cm)



BEGIN

1 Place 12' wall centered on floor.
1-1/2" (3,8 cm) overlap is to the top.

Secure wall with (1) 2" screw into 10' wall bottom plate **(Fig. A)** and top plate **(Fig. B)**.

Secure wall to bottom plate first.
⚠ ENSURE PANEL CORNERS ARE FLUSH.

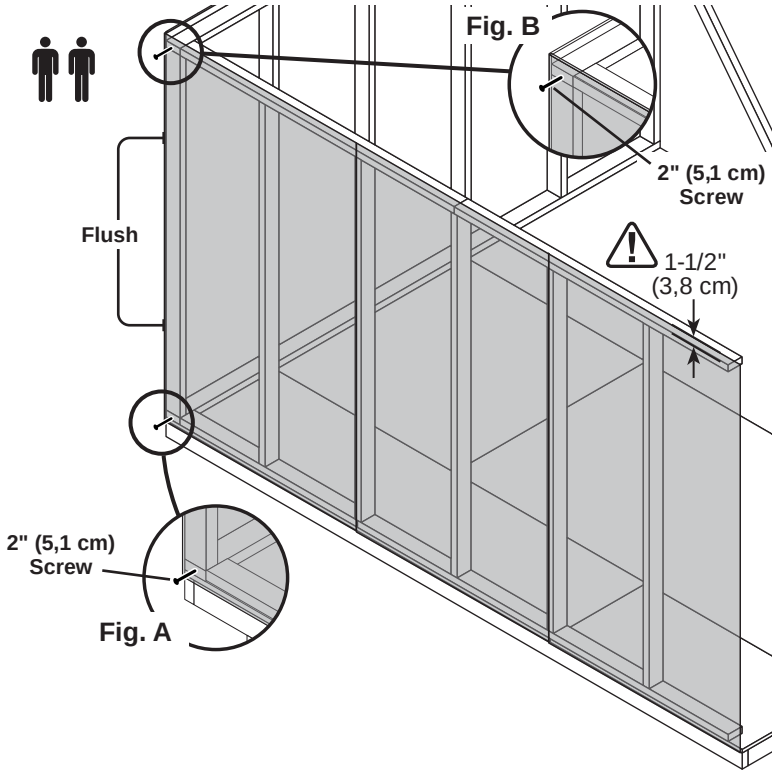

2 Nail lower edge of panels to floor with 2" nails spaced 6" apart.
Angle nails into floor frame **(Fig. C)**.

Nail panel to 10' wall stud with 1-1/2" nails spaced 6" apart.

3 Secure wall top plate with (1) 3" screw angled at the corner at an angle as shown **(Fig. D)**.

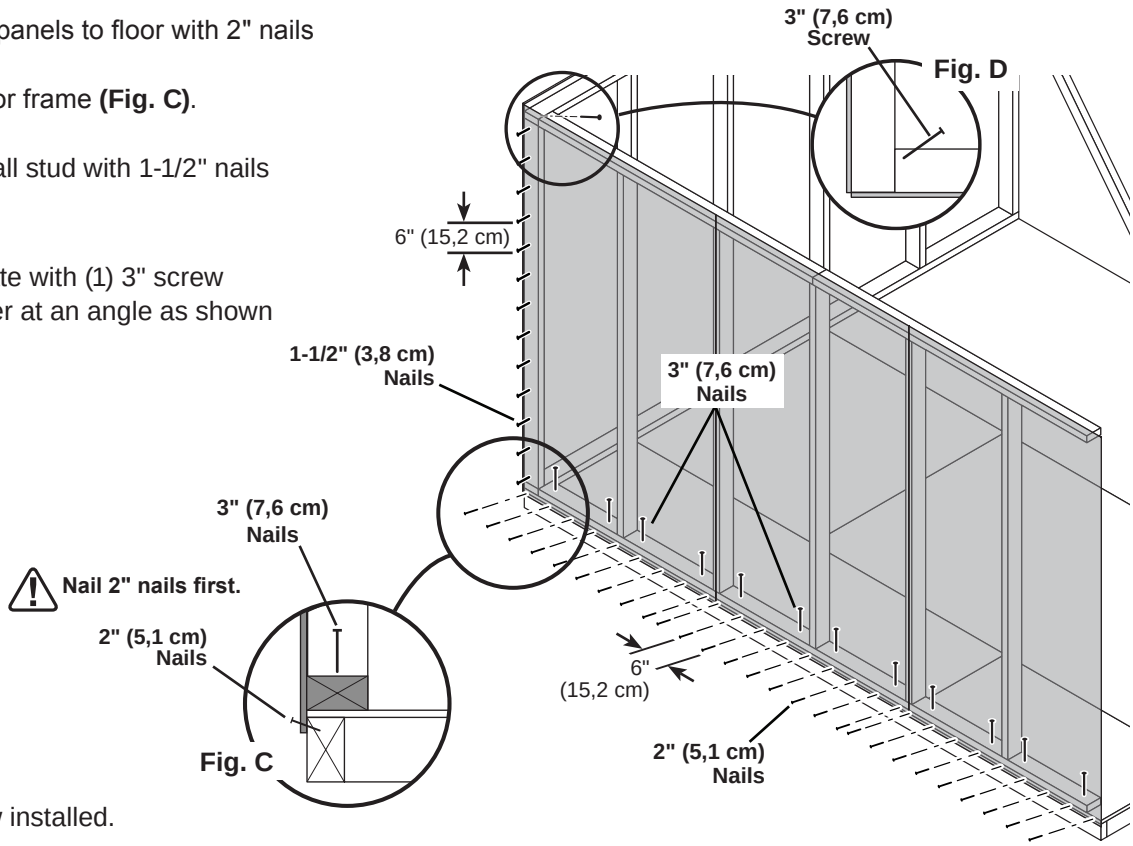

FINISH

Your 12' wall is now installed.

2nd 10' WALL INSTALLATION

PARTS REQUIRED:

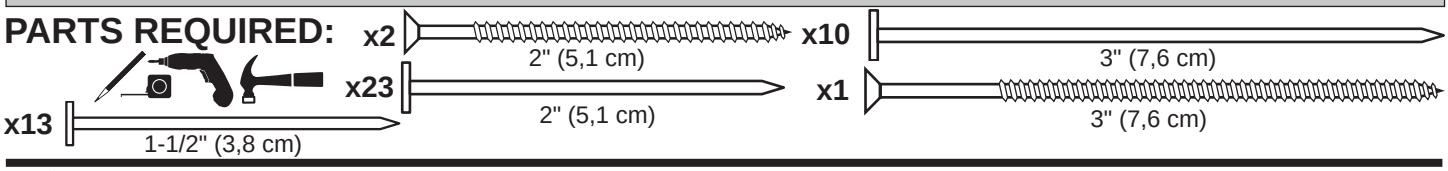

BEGIN

1 Place 2nd 10' wall centered on floor. 1-1/2" (3,8 cm) overlap is to the top.

2 Secure wall with (1) 2" screw through eave wall panel into 10' wall bottom and top plates **(Fig. B, Fig. A)**.
Secure wall to bottom plate first.

⚠ **ENSURE PANEL CORNERS ARE FLUSH.**

3 Nail lower edge of wall panels to floor frame with 2" nails spaced 6" apart.
Angle nails into floor frame **(Fig. C)**.

Secure wall bottom plates to floor with 3" nails **(Fig. C)**.

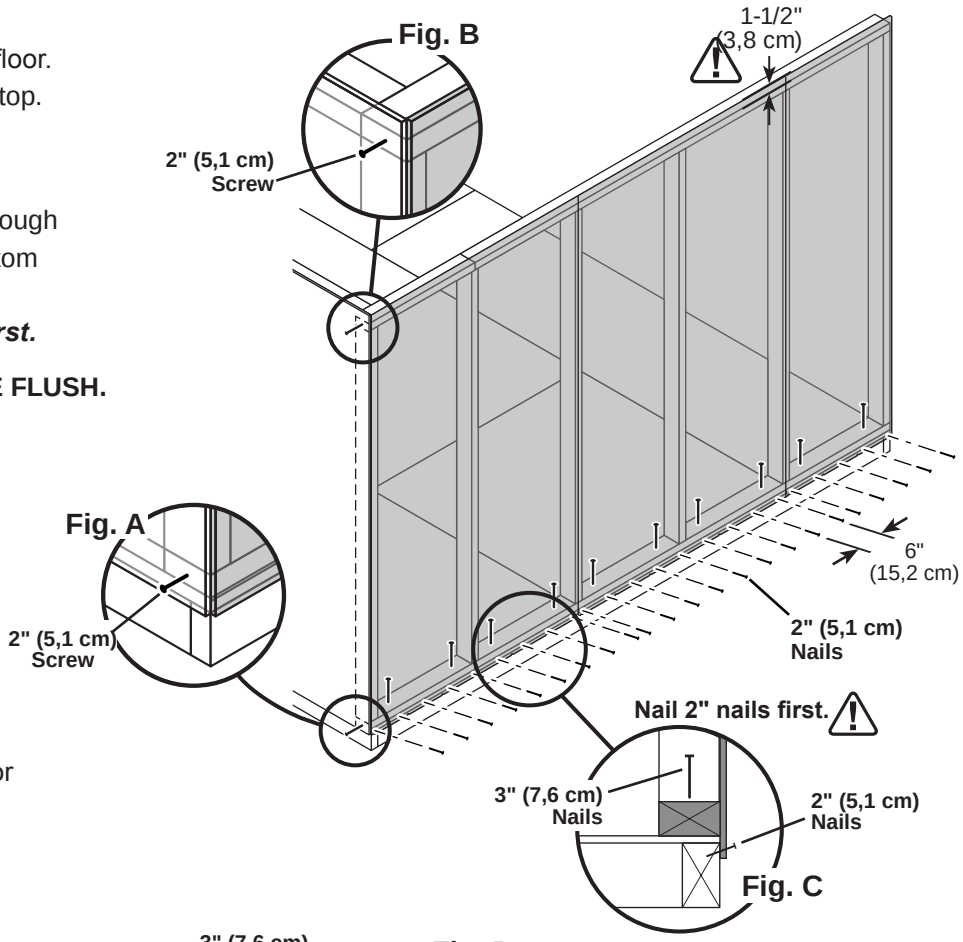

4 Nail 12' wall panel to 10' wall stud with 1-1/2" nails spaced 6" apart.

5 Secure gable wall top plate with (1) 3" screw at the corner at an angle as shown **(Fig. D)**.

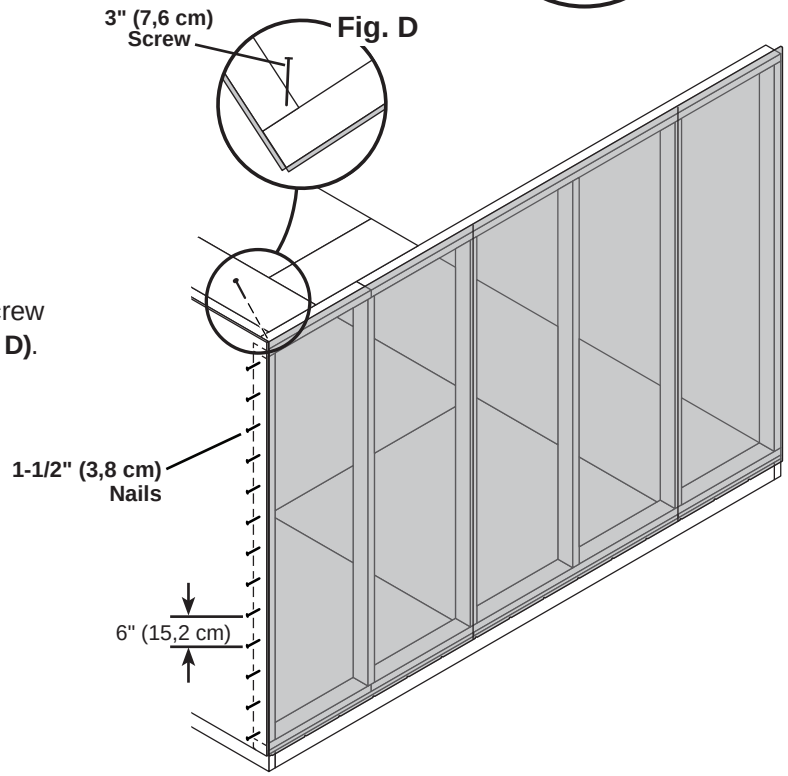

FINISH

Your 2nd 10' wall is now installed.

12' DOOR WALL INSTALLATION

PARTS REQUIRED

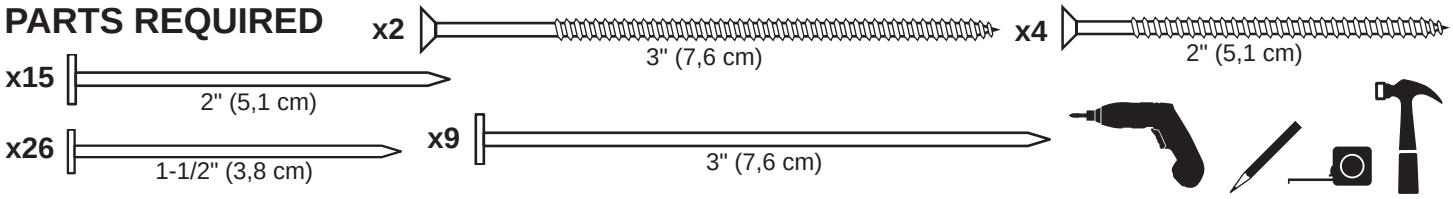

BEGIN

1

Place 12' wall on floor centered between 10' walls.

Secure wall with 2" screws into top and bottom plates **(Fig. A, Fig. B)**.

Secure wall to bottom plate first.

⚠ **ENSURE PANEL CORNERS ARE FLUSH.** ⚠

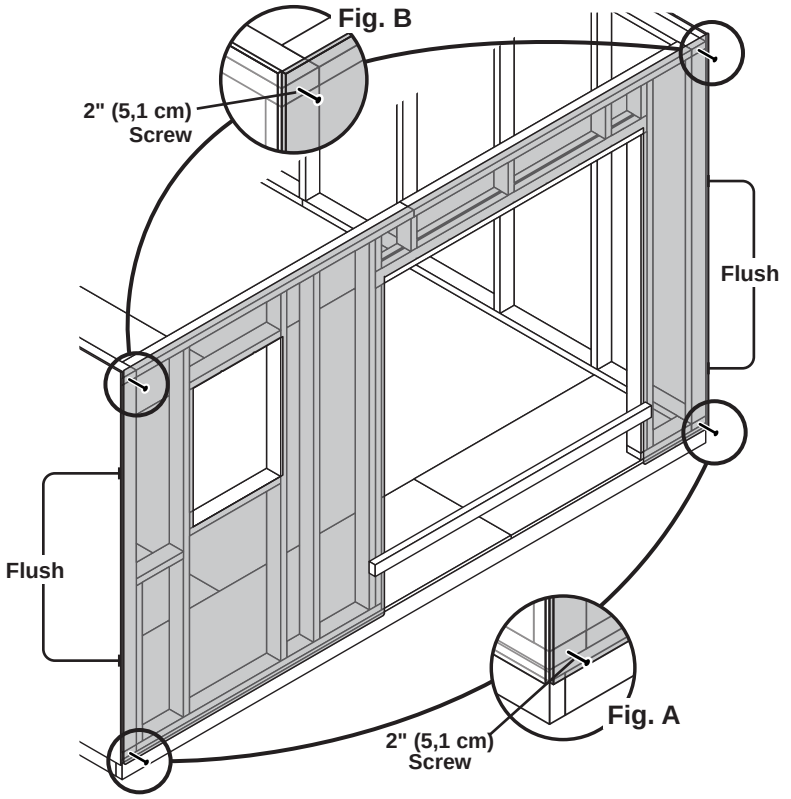

2

Nail lower edge of panels to floor with 2" nails spaced 6" apart.
Angle nails into floor frame **(Fig. C)**.

Nail panels to 10' wall studs with 1-1/2" nails spaced 6" apart.

3

Secure wall top plates with 3" screws at each corner at an angle **(Fig. D)**.

Secure wall bottom plates to floor with 3" nails **(Fig. C)**.

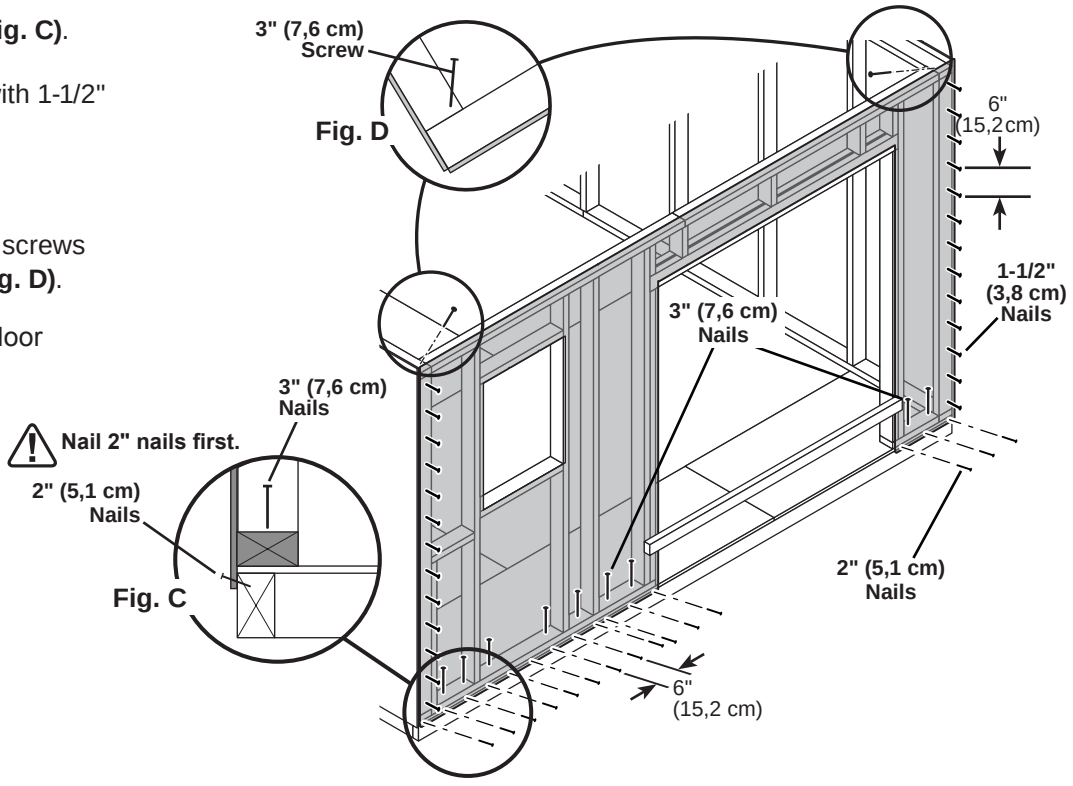

FINISH

Your walls are now installed.

10' x 12' WALL DOUBLERS INSTALLATION

PARTS REQUIRED:

x2 SP
2 x 4 x 48" (5,1 x 10,2 x 121,9 cm)

x2 JBD
2 x 4 x 20-3/8" (5,1 x 10,2 x 51,8 cm)

x2 TJ
2 x 4 x 92-5/8" (5,1 x 10,2 x 235 cm)

x2 TP
2 x 4 x 96" (5,1 x 10,2 x 243,8 cm)

x64

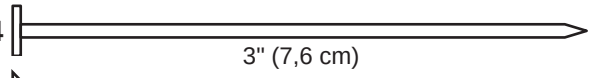

3" (7,6 cm)

x8

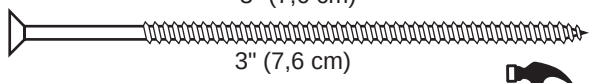

3" (7,6 cm)

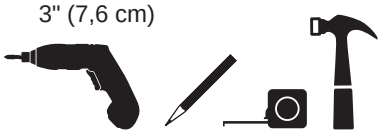

BEGIN

1 Orient parts on top of wall frames. Secure from top with (2) 3" nails spaced every 24" **(Fig. A).**

2 Secure from bottom with (2) 3" screws at each corner **(Fig. B).**

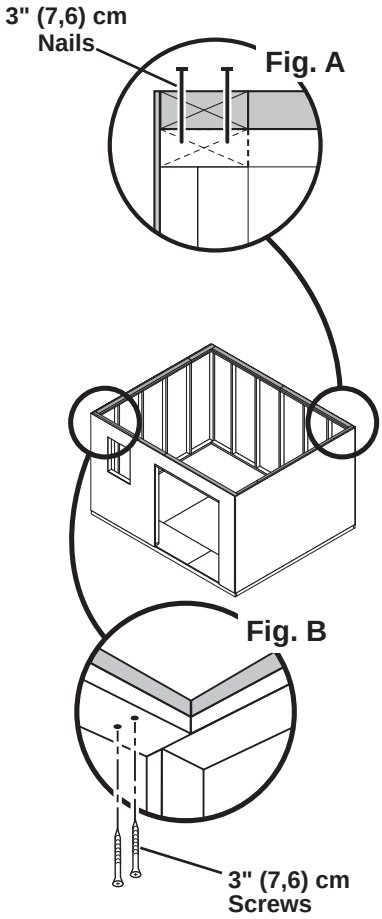

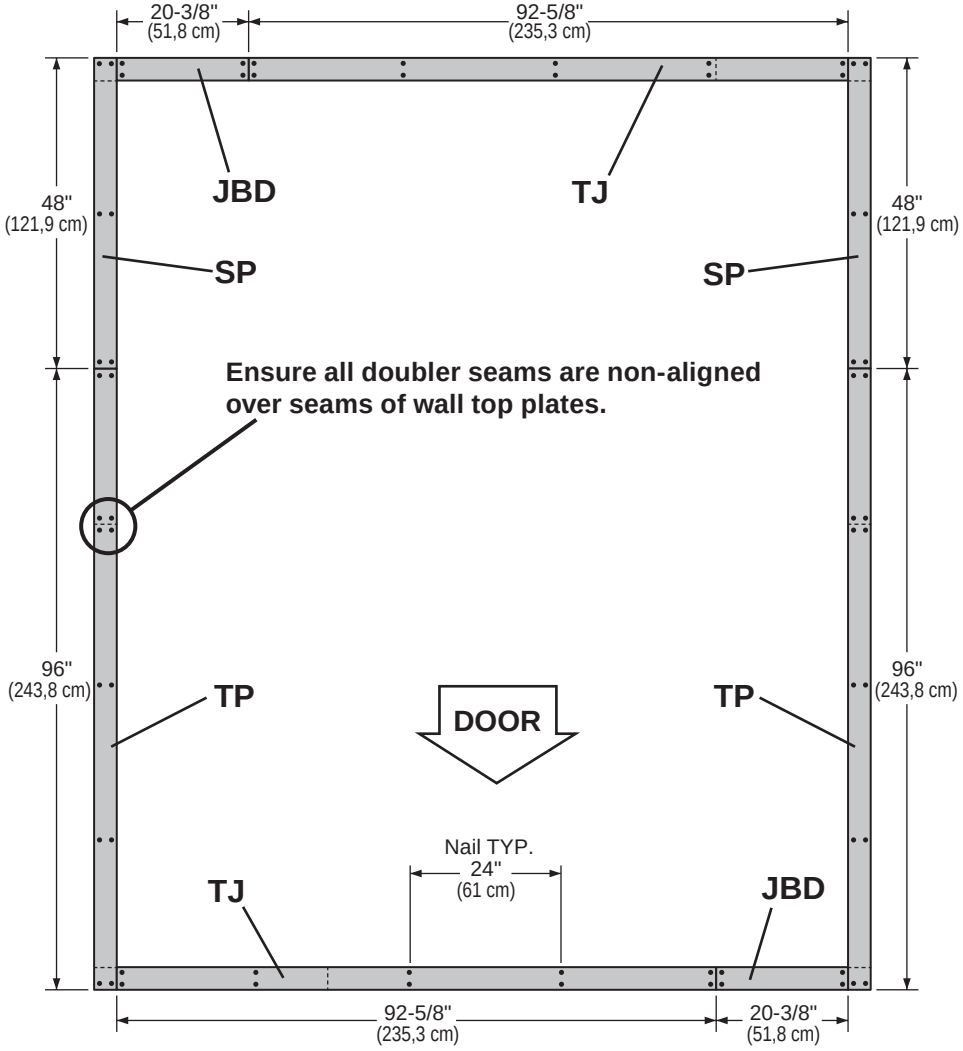

FINISH

Your wall doublers are now installed.

RAFTERS

PARTS REQUIRED:

x12 6 x 24" (15,2 x 60,9 cm)

x14 **AD**
2 x 4 x 65" (5,1 x 10,2 x 165,1 cm)

x1 **OO** **Temporary Support**
69" (175,3 cm) Door Stiffener

x144 2" (5,1 cm)

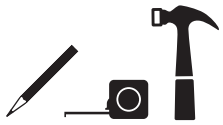

Build (2) rafter assemblies with (1) gusset (Fig. B).

BEGIN

1 Place (2) rafter-halves **AD** in the corner of back and side walls, flush to panels and studs.

Flush rafters at peak. Secure gusset to rafters with 2" nails following the pattern shown **(FIg. A)**.

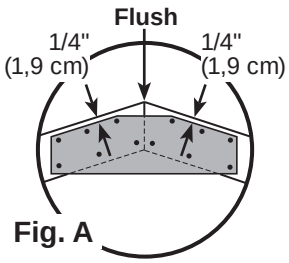

Fig. A

HINT:
Use floor and walls to help assemble rafters!

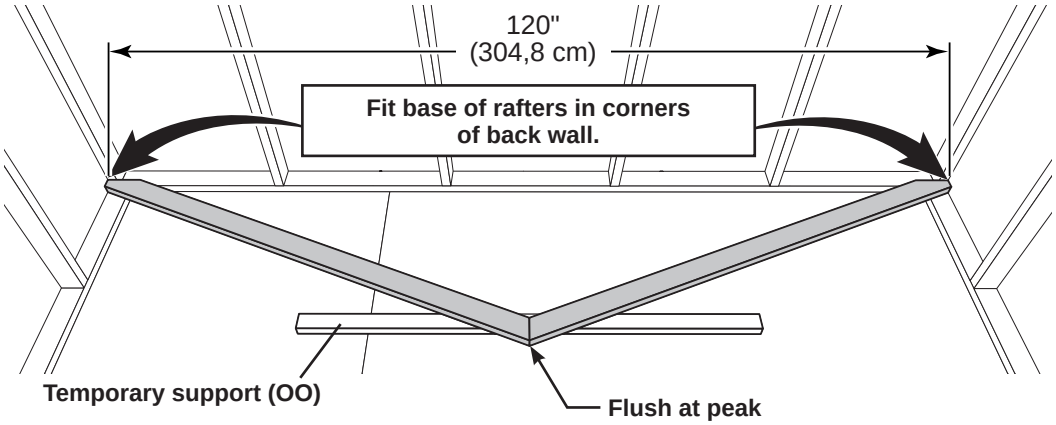

SET ASIDE THESE TWO RAFTER ASSEMBLIES.

Build 5 rafter assemblies with (2) gussets (Fig. C).

2 Place (2) rafter-halves **AD** in the corner of back and side walls, flush to panels and studs (STEP - 1).

Flush rafters at peak. Secure gusset to rafters with 2" nails following the pattern shown **(FIg. A)**.

3 Flip over rafter assembly and fasten second gusset to other side with 2" nails **(FIg. C)**.

Fig. B - ***Build 2***

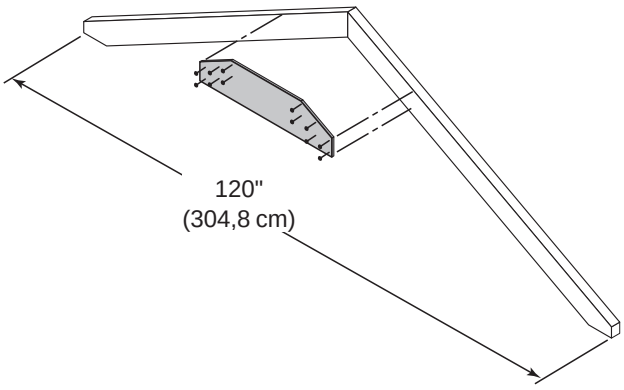

Fig. C - ***Build 5***

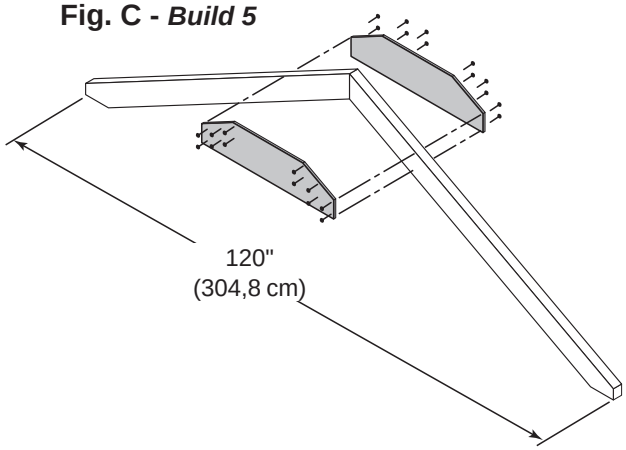

FINISH

Your rafters are now assembled.

RAFTER INSTALLATION

PARTS REQUIRED:

x5 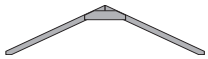 Two-Gusset Preassembled

x2 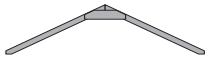 One-Gusset Preassembled

x28 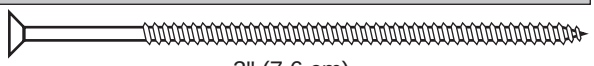

3" (7,6 cm)



BEGIN

1 Align rafters over the wall studs.



Check that you have the measurements shown.

Secure rafters with (2) 3" screws angled at each end **(Fig. A, Fig. B)**.

Secure rafters on opposite side.

Maintain the measurements between rafters.

10' x 12'

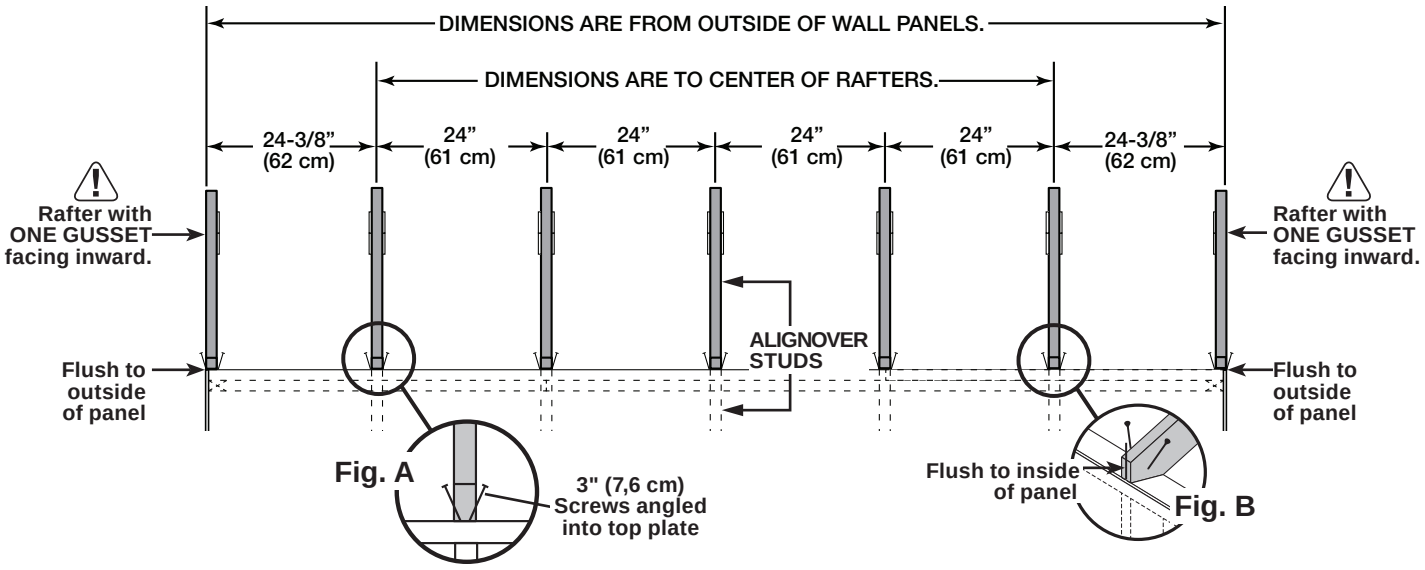

FINISH

Your rafters are now installed.

GABLE UNITS

PARTS REQUIRED:

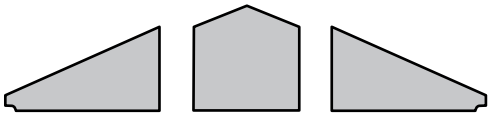

x4 AF
2 x 4 x 18-1/8" (5,1 x 10,2 x 46 cm)

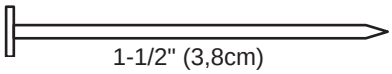

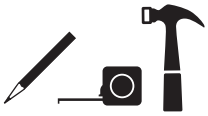

Install gable panels with the primed side facing up.

BEGIN

1 Orient parts **AF** on the flat side, as shown.
Measure and mark the center of the middle gable panel. Secure with 1-1/2" nails spaced 6" apart along edge.

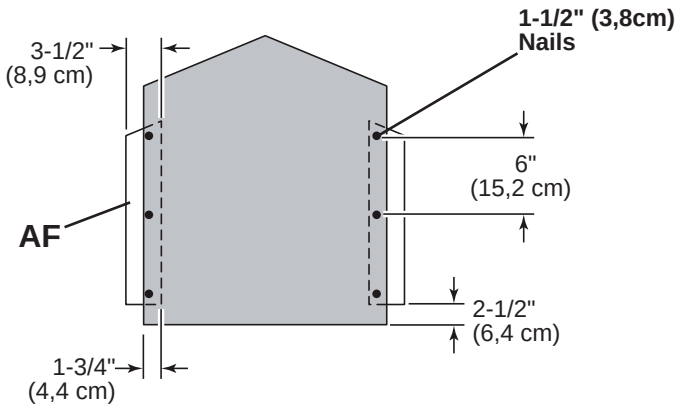

2 Place left panel on **AF** flush to installed gable panel and secure with 1-1/2" nails spaced 6" apart along edge.

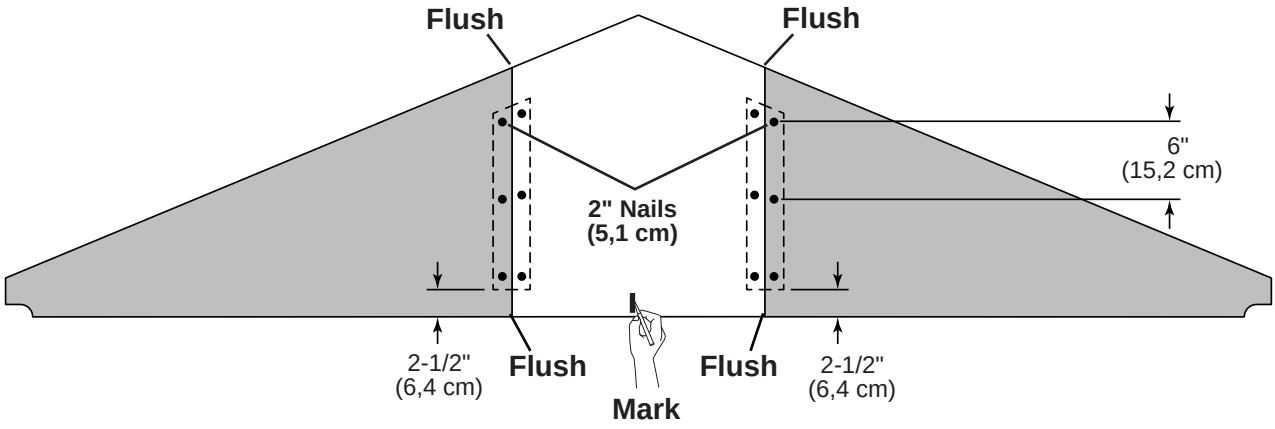

Repeat step 2 for right panel.

Repeat all steps to build (1) additional gable unit.

GABLE INSTALLATION

PARTS REQUIRED:

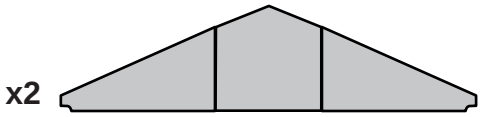

x2

Pre - assembled

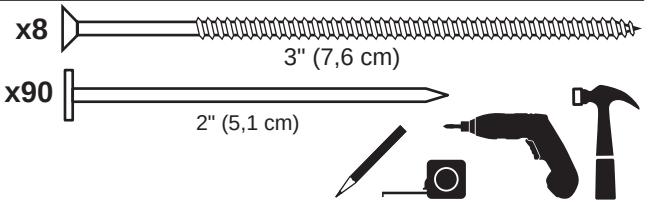

BEGIN

1 Measure 2-1/2" down from top plate doubler and mark at each side as shown. Set gable unit on top plate. Fasten with (1) 2" nail on each side.

⚠ **BE SURE GABLE IS CENTERED ON WALL BEFORE NAILING.** ⚠

2 Continue nailing lower edge of panels to wall doubler with 2" nails spaced 6" apart.

3 Working inside, secure gable unit with (2) 3" screws angled into each **AF** at an angle **(Fig. A)**.

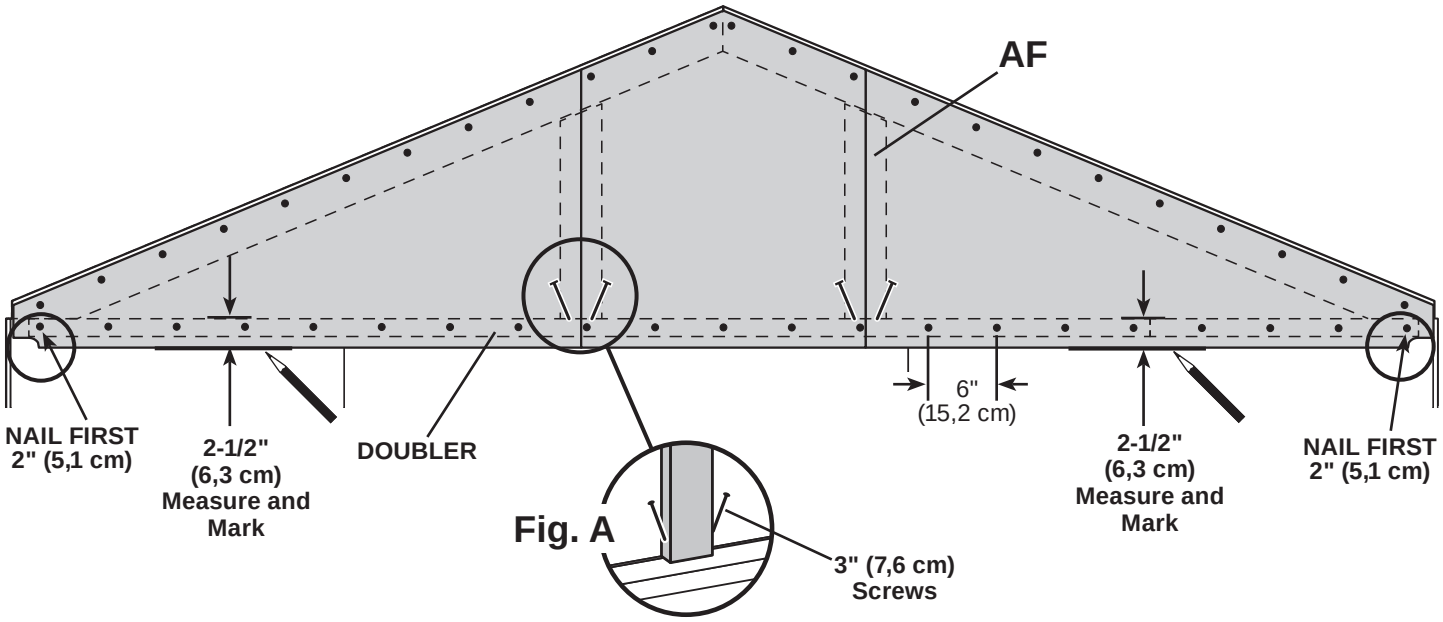

4 Continue securing panels to rafter with 2" nails spaced 6" apart.

Repeat steps to install the opposite side gable unit.

FINISH

Your gable units are now installed

10' x 12' ROOF PANELS

PARTS REQUIRED:

x1 — 7/16 x 48 x 96" (1,1 x 121,9 x 243,8 cm)

GAA — 3/4" GAUGE BLOCK

x4 — 2" (5,1 cm)

Roof panels may cause serious injury until securely fastened.

Note: Install all roof panels with the rough side up (painted grid lines).

BEGIN

1 Place the **48" x 96"** panel on rafters with a 3/4" measurement on the rafter **(Fig. A)** and the panel flush at the peak **(Fig. B)**.

Secure panel with (2) 2" nails in the corners.

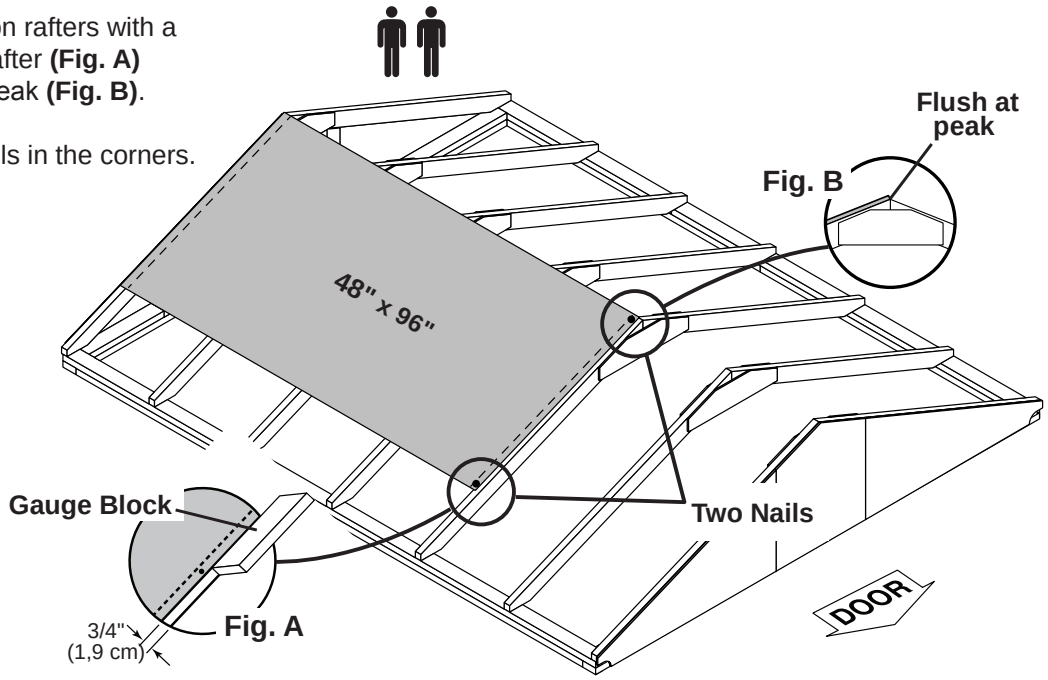

2 Move to the opposite end.
Using the long edge of the panel as a lever, move the panel side-to-side until the top corner is flush to the peak **(Fig. B)** and there is a 1/2" measurement on the gable end rafter **(Fig. C)**.

Secure panel with (2) 2" nails in the corners.

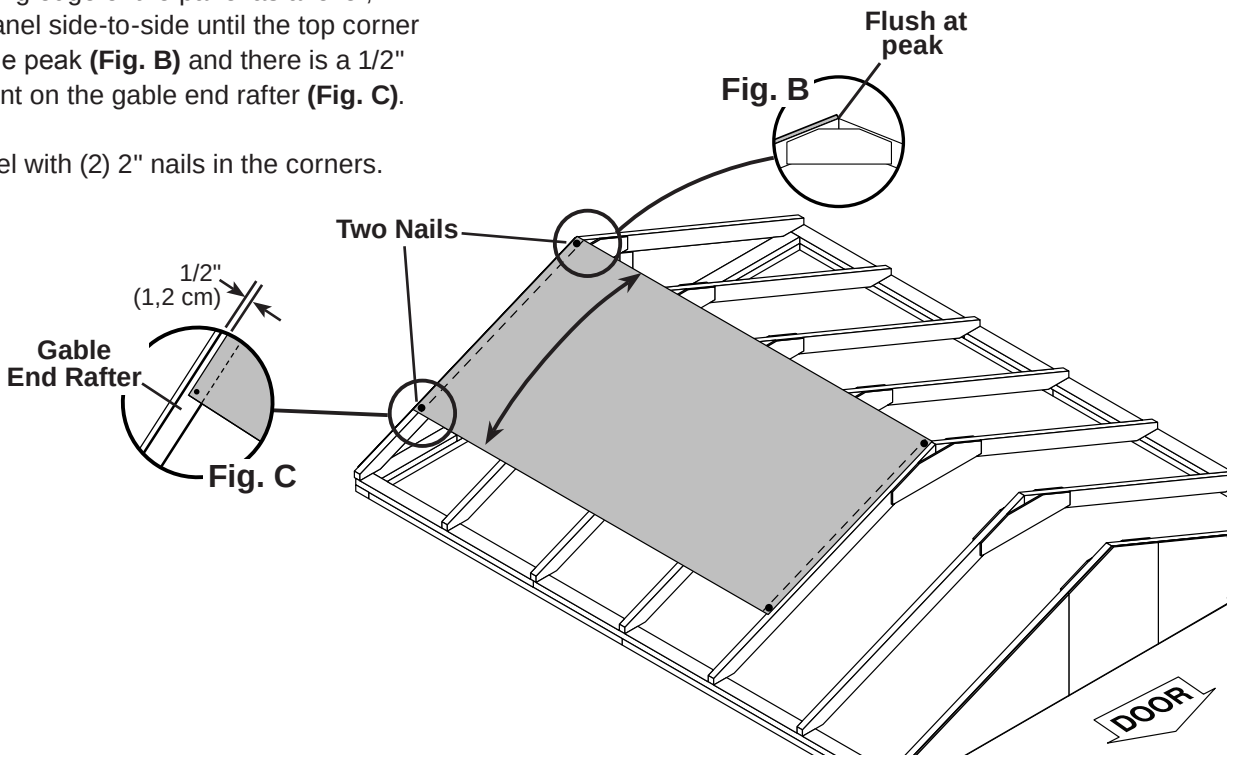

10' x 12' ROOF PANELS

PARTS REQUIRED:

x12

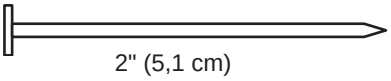

2" (5,1 cm)

x1

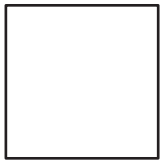

7/16 x 48 x 96"
(1,1 x 121,9 x 243,8 cm)

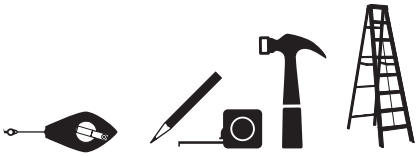

3 Install a **48" x 47-7/8"** roof panel flush to the installed panel and flush at peak **(Fig. B)**.

Secure panel with (1) 2" nail in each corner.

4 Move the gable end rafter edge until it is 1/2" from the **48" x 47-7/8"** roof panel **(Fig. C)**.

Finish securing panel with (2) 2" nails in the corners.

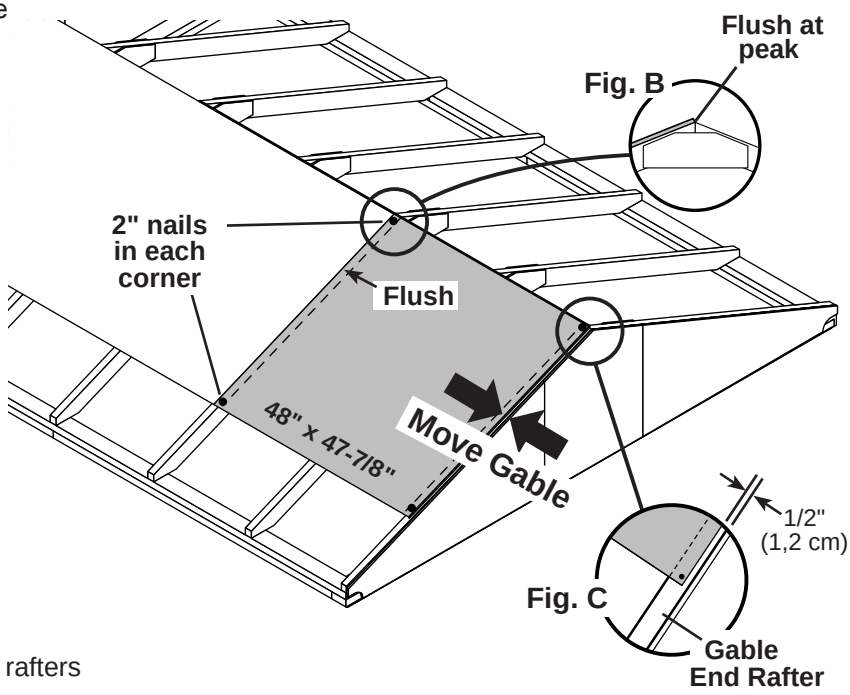

5 Maintain spacing between the center of the rafters at the lower edge of the panels **(Fig. D)**.

Secure panels with (1) 2" nail into each rafter, as shown.

Move to the top of the panel and keep spacing between the center of the rafters.

Secure panels with (1) 2" nail into each rafter.

Fig. D

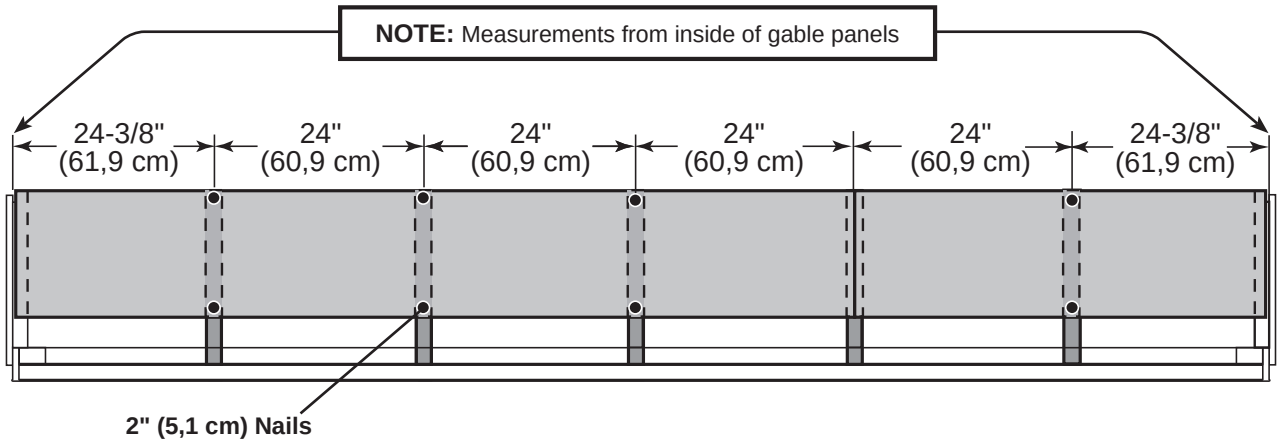

10' x 12' ROOF PANELS

PARTS REQUIRED:

x1 23-1/2" x 47-7/8" (59,7 x 121,9 cm)

x1 23-1/2" x 96" (59,7 x 243,8 cm)

GAA

3/4" GAUGE BLOCK

x8 2" (5,1 cm)



6 Install **23-7/8" x 48"** and **13-7/8" x 96"** roof panels with a 3/4" measurement on the rafter **(Fig A)** and flush to the installed panels.

Secure panels with (1) 2" nail in each corner.



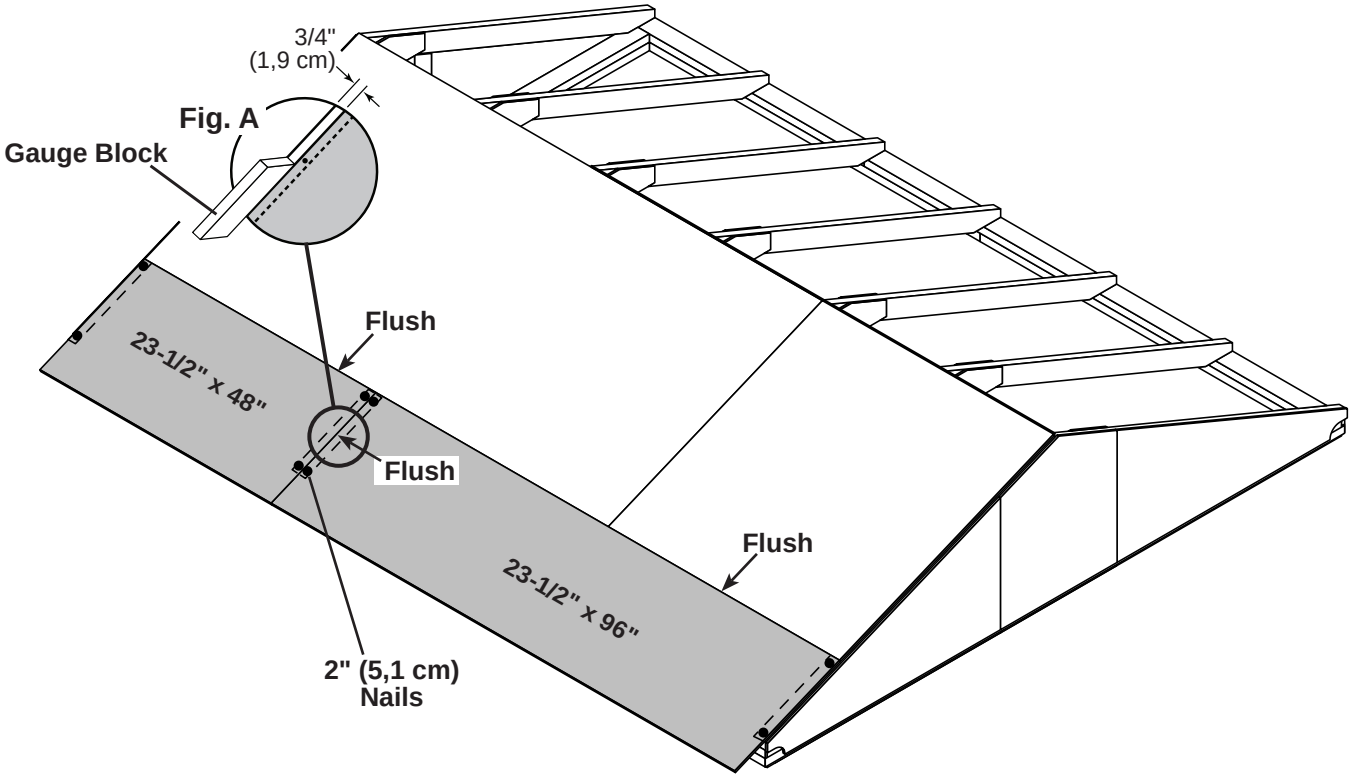

10' x 12' ROOF PANELS

PARTS REQUIRED:

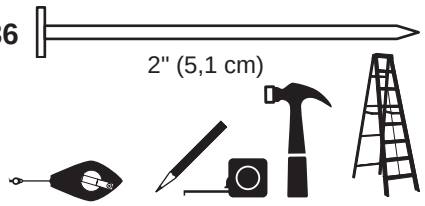

7 Secure all roof panels with 2" nails spaced 6" apart and 12" apart inside of the 48" wide panels.

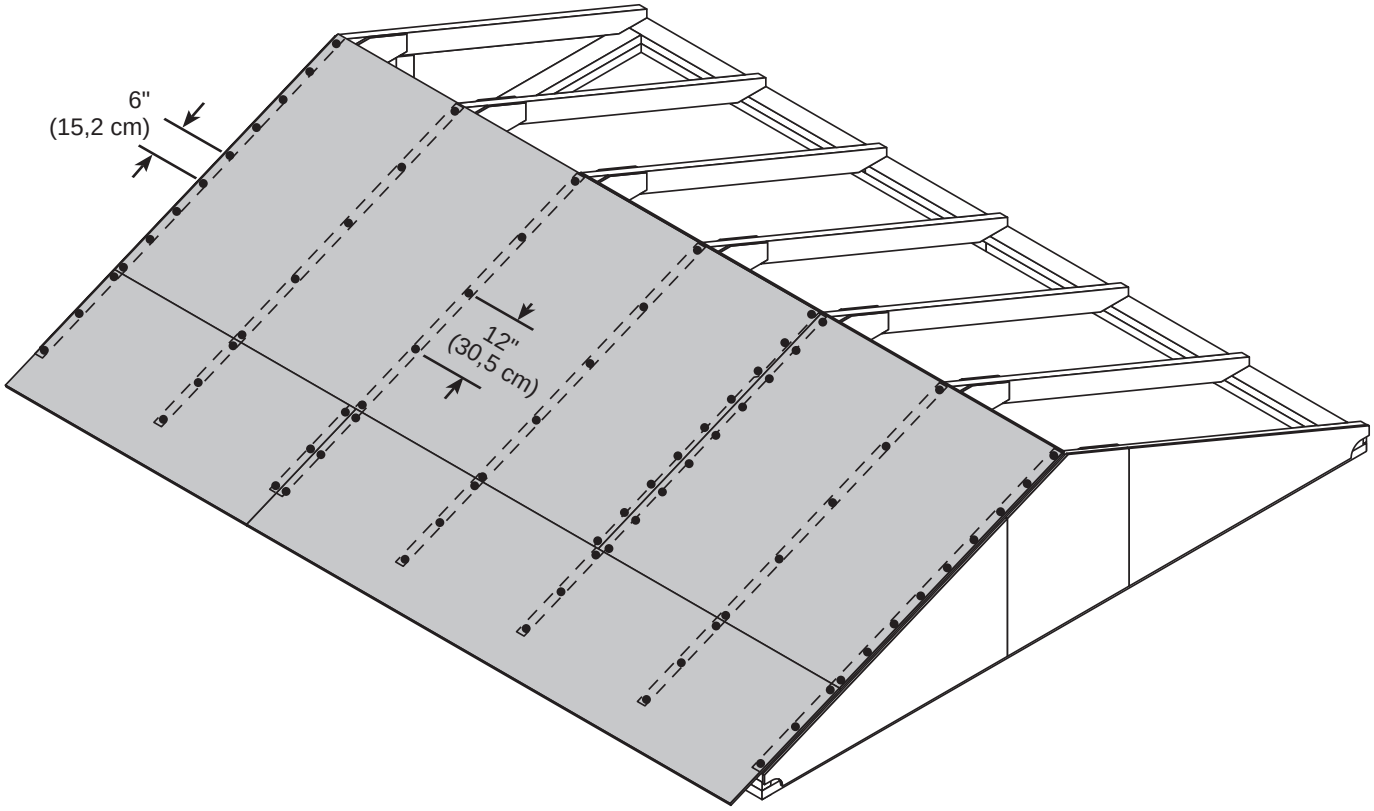

Repeat STEPS to install roof panels on the opposite side.

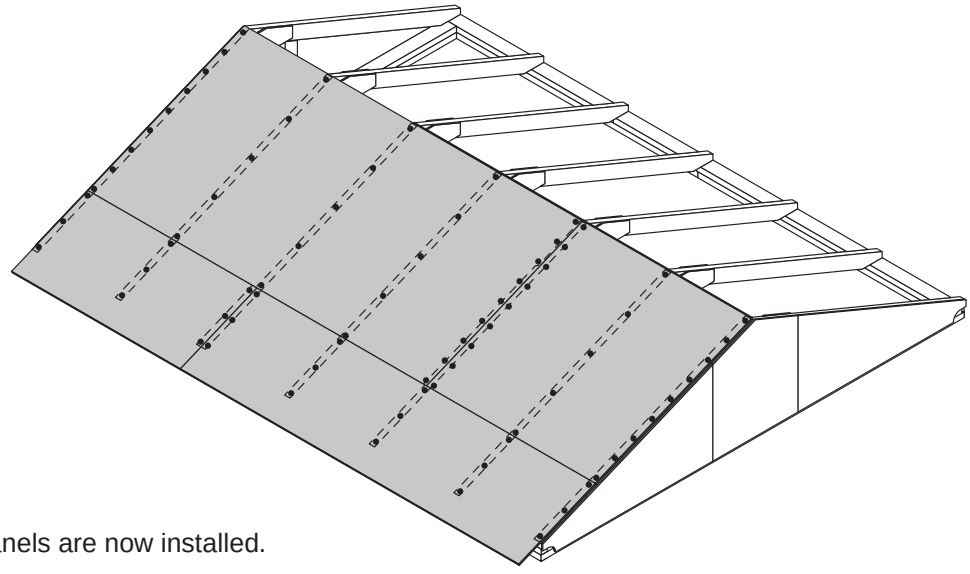

FINISH

Your roof panels are now installed.

GABLE TRIM

PARTS REQUIRED:

x2 **AUR**
19/32" x 3-1/2" x 71-15/16" (1,5 x 8,9 x 182,7 cm)

x2 **AUL**
19/32" x 3-1/2" x 71-15/16" (1,5 x 8,9 x 182,7 cm)

x48 2" (5,1 cm)

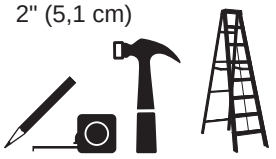

BEGIN

1 Install front gable trim **AUR** and **AUL** flush to top of roof panel and flush at peak, as shown **(Fig. A)**. Secure trim with 2" finishing nails 7-1/4" apart.

Repeat above steps to secure the back wall gable trim.

Fig. A

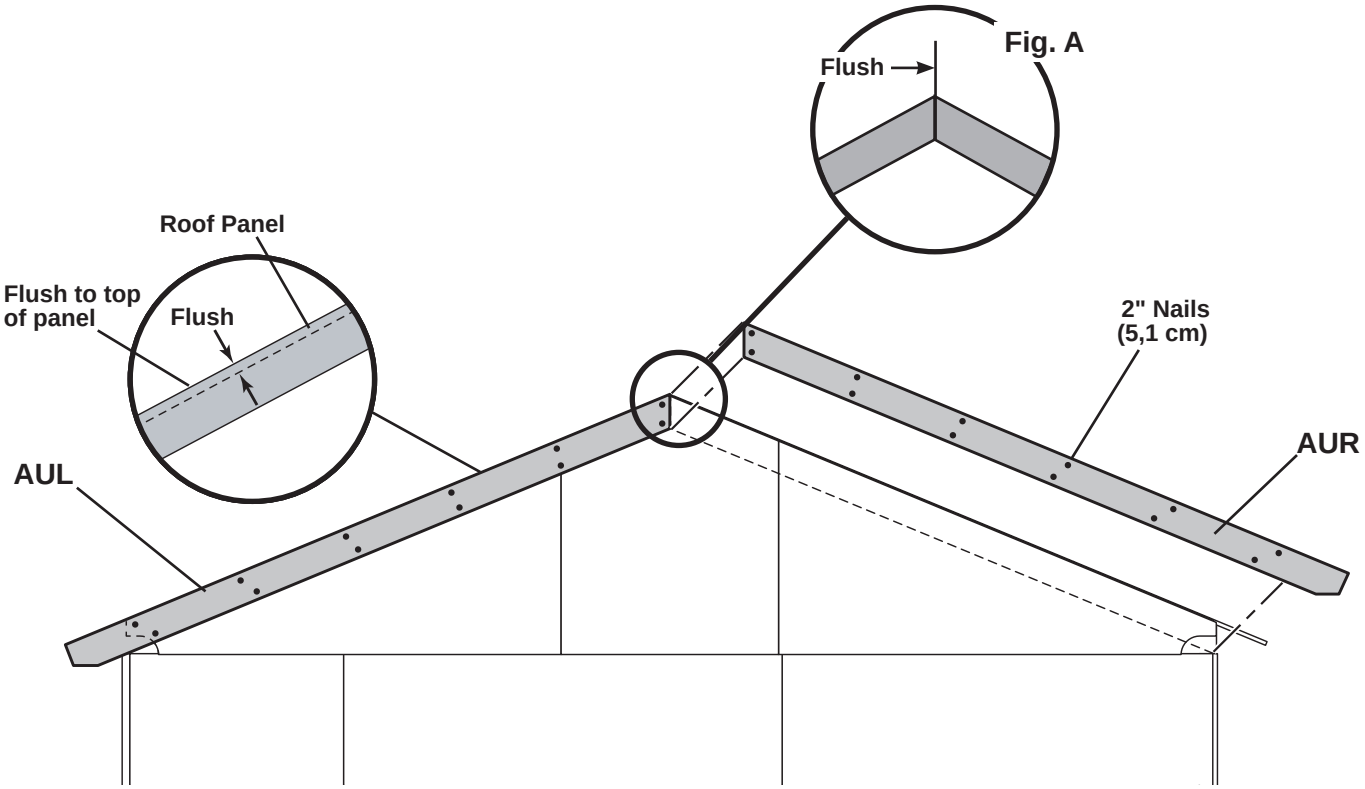

FINISH

Your gable trim is now installed.

10' x 12' EAVE TRIM

PARTS REQUIRED:

x8 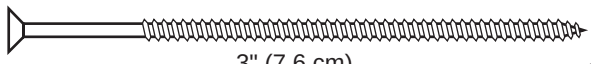
3" (7,6 cm)

x62 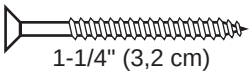
1-1/4" (3,2 cm)

x2 **AS**
2 x 6 x 49-1/2" (5,1 x 15,2 x 125,7 cm)

x2 **VX**
2 x 6 x 96" (5,1 x 15,2 x 243,8 cm)



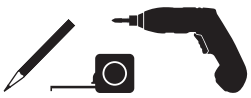

BEGIN



1 Place **VX** eave trim flush along edge of roof panel **(Fig. A)**.
Screw through roof panel into **VX** with 1-1/4" screws spaced approximately 7-1/2" apart, as shown.

2 Install **AS** flush to edge of roof panel and flush to installed eave trim **VX**.
Screw through roof panel into **AS** with 1-1/4" screws spaced approximately 7-1/2" apart, as shown.

Repeat installation on opposite side.

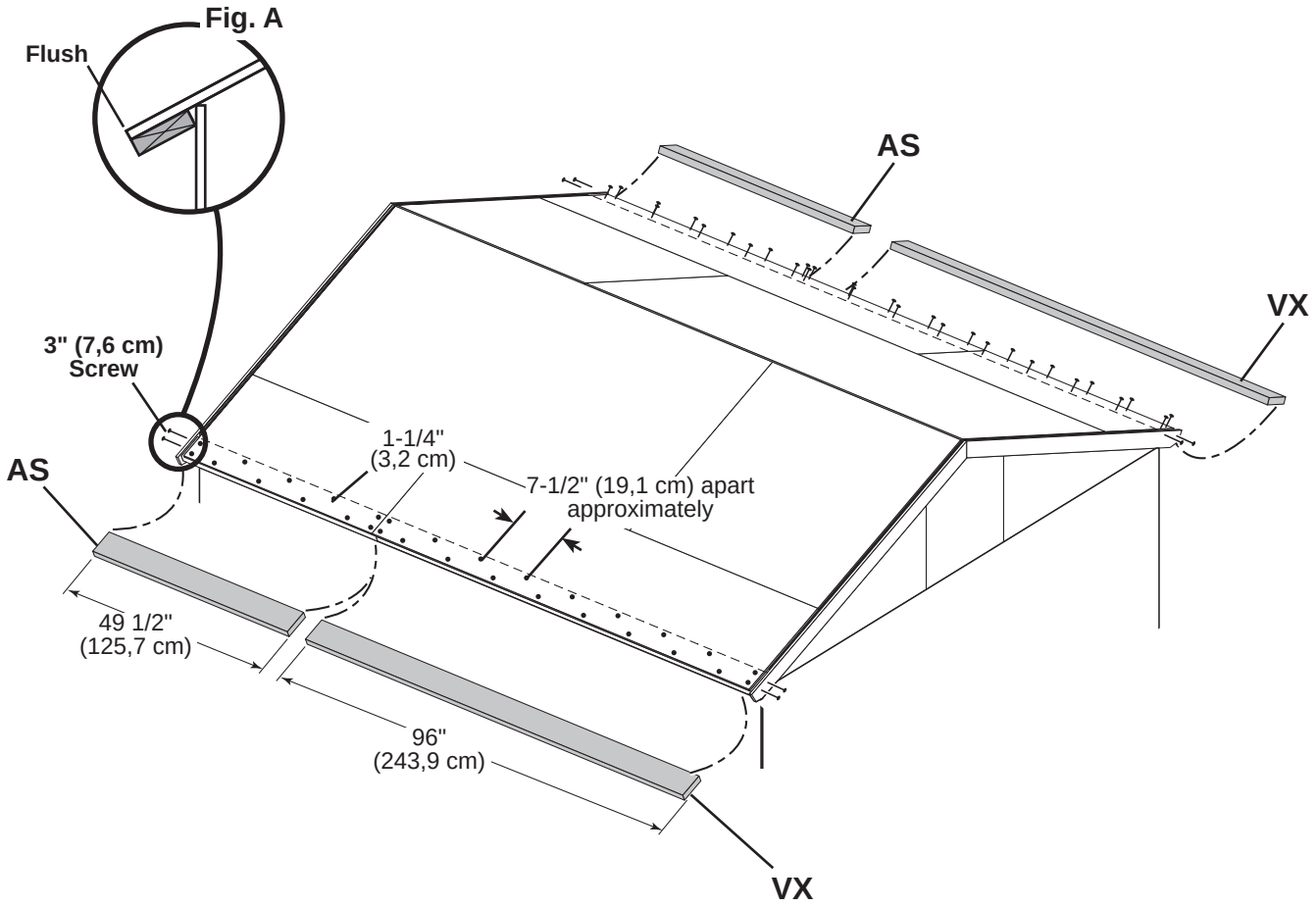

FINISH

Your eave trim is now installed.

CORNER TRIM

PARTS REQUIRED:

x8
3/8" x 1-3/4" x 83-1/2" (1 x 4,5 x 212,1 cm)

x64
2" (5,1 cm)

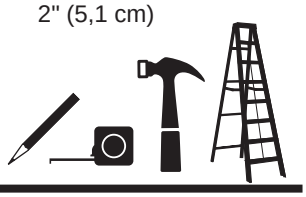

BEGIN

1. Install gable end **83-1/2"** corner trim under gable panel, **(Fig. A)** and flush to eave wall panel **(Fig. B)**. Secure with 2" finishing nails spaced evenly.

2. Install eave side **83-1/2"** corner trim flush to eave soffit and flush along seam of installed corner trim **(Fig. C)**. Secure with 2" finishing nails spaced evenly.

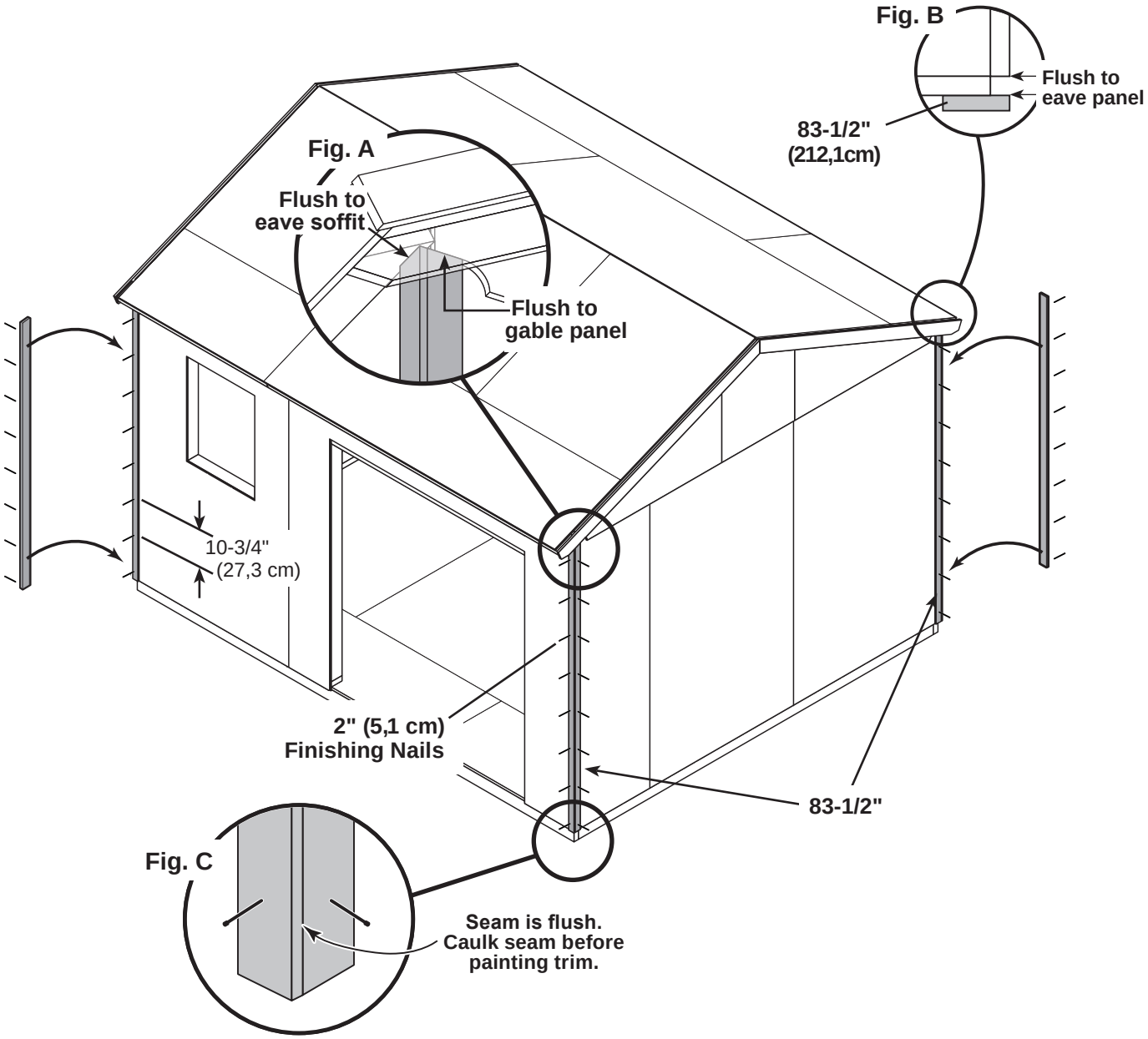

Repeat steps for each corner of shed.

FINISH

Your corner trim is now installed.

LOFT JOIST ASSEMBLY

PARTS REQUIRED:

x4 RL
2 x 4 x 24" (5,1 x 10,2 x 61 cm)

x4 TP
2 x 4 x 96" (5,1 x 10,2 x 243,8 cm)

x48
3" (7,6 cm)

7/16" (11 mm) Drill Bit



BEGIN

1 Orient parts **TP** and **RL** on a flat surface.
Hold parts **TP** and **RL** flush and aligned.

2 Assemble joist with 3" nails in a staggered pattern.

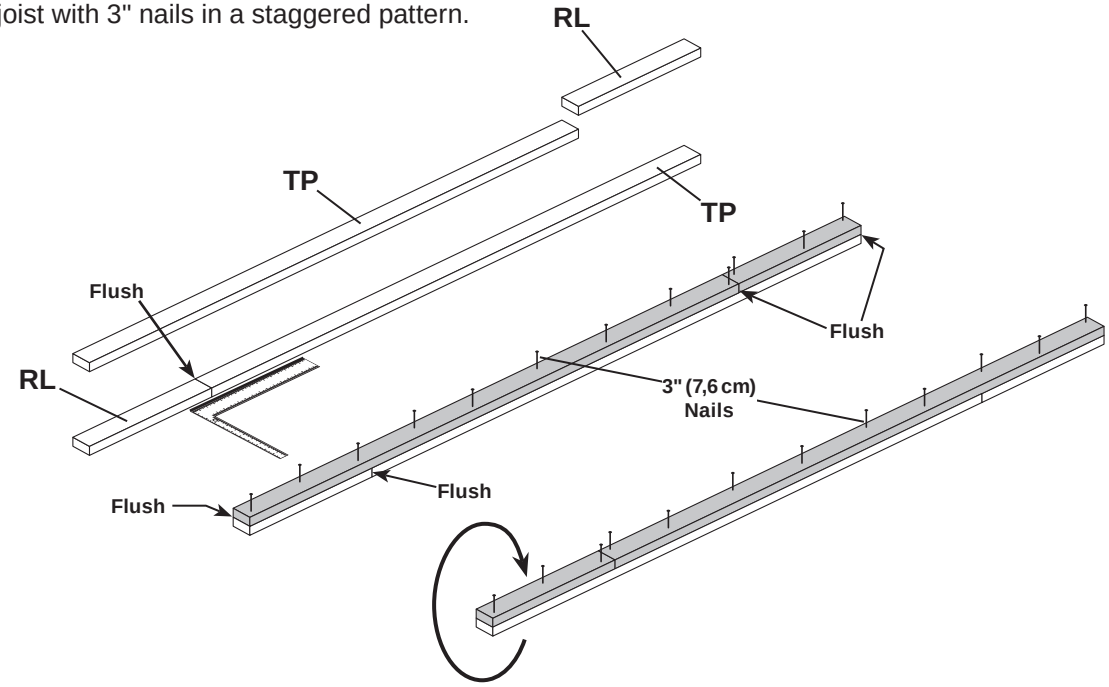

3 Turn assembled joist over and repeat staggered nail pattern.

4 Support joist and drill a 7/16" hole through each end **(Fig. A)**.

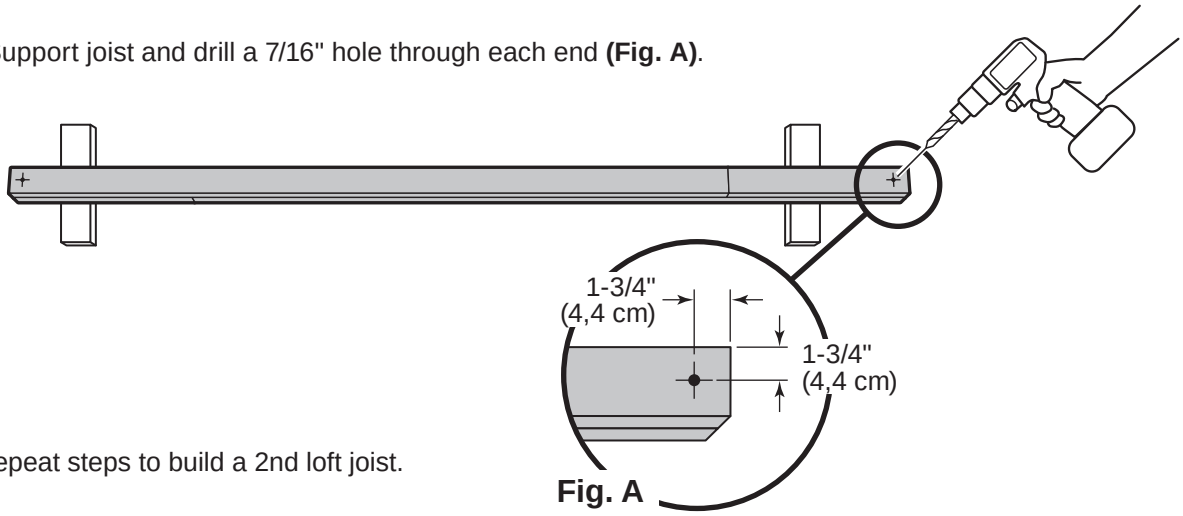

Fig. A

Repeat steps to build a 2nd loft joist.

FINISH

Your loft joists are now assembled.

LOFT SUPPORTS

PARTS REQUIRED:

x2 **AO**
2 x 4 x 22-1/2"
(5,1 x 10,2 x 57,1 cm)

x1 **PYA**
2 x 4 x 19-3/4"
(5,1 x 10,2 x 50,2 cm)

5/16" (7,9 mm) Drill Bit

x18
3" (7,6 cm)

x8
3" (7,6 cm)

x1 **PT**
2 x 3 x 96" (5,1 x 7,6 x 243,8 cm)

x1 **LW**
2 x 3 x 23-7/8"
5 x 7,6 x 60,6 cm



BEGIN

1 Install **LW** and **PT** flush to bottom of top plate and flush at seam.
Secure with (2) 3" nails at wall studs and (4) 3" nails at seam.

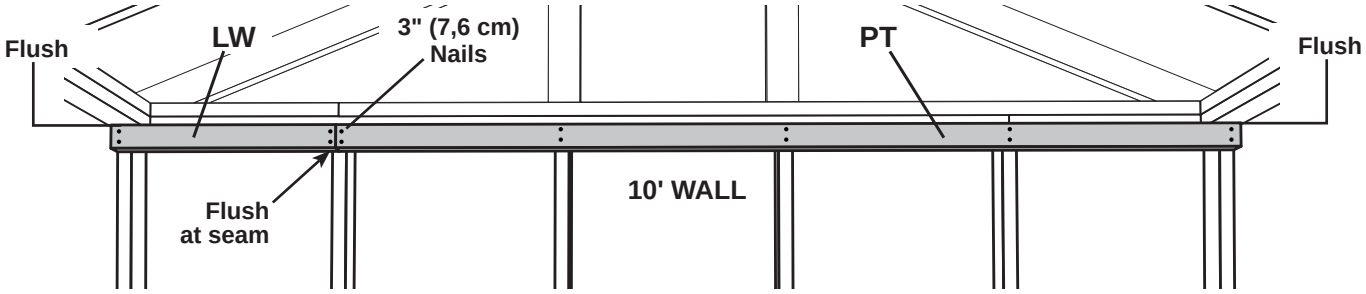

2 Install loft support **AO** above window at measurement shown to top plate **(Fig. A)** and flush to wall panel.
Secure with (2) 3" screws angled into **AO** on window side, and with (2) 3" nails on the back wall side.
Predrill screw holes with 5/16" bit.

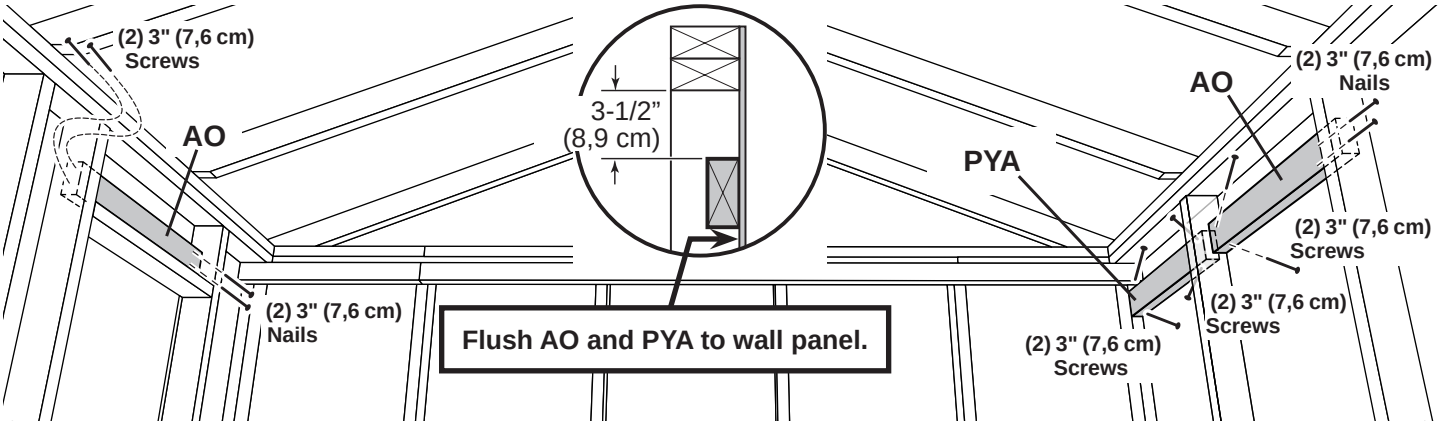

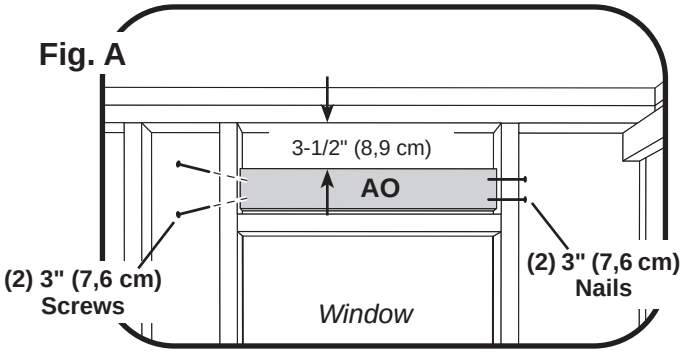

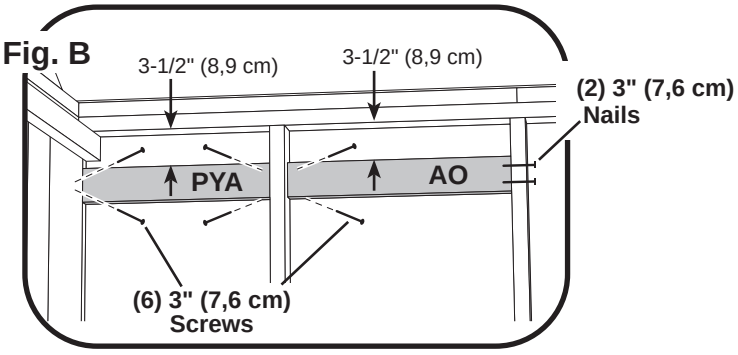

3 Install loft supports **PYA** and **AO** to back wall at measurement shown to top plate **(Fig. B)** and flush to wall panel.
Secure **PYA** and **AO** with (6) 3" screws angled, as shown, and with (2) 3" nails into the right side of **AO**.
Predrill all screw holes with 5/16" bit.

FINISH

Your loft supports are now installed.

LOFT JOISTS

PARTS REQUIRED:

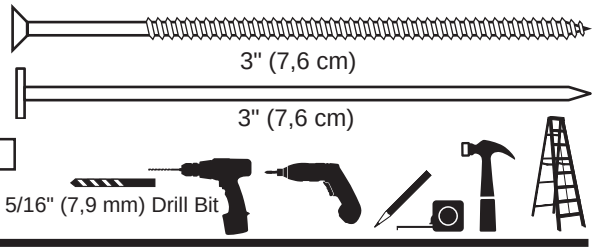

✓BEGIN

1 Lift and position the front loft joist on loft supports, flush to window frame stud **(Fig. C)** and at the measurement shown at back wall **(Fig. D)**.

Secure with (2) 3" nails through the window side stud **(Fig. C)** and (2) 3" screws angled up into top plate on the back wall side **(Fig. D)**.

Predrill screw holes with 5/16" bit.

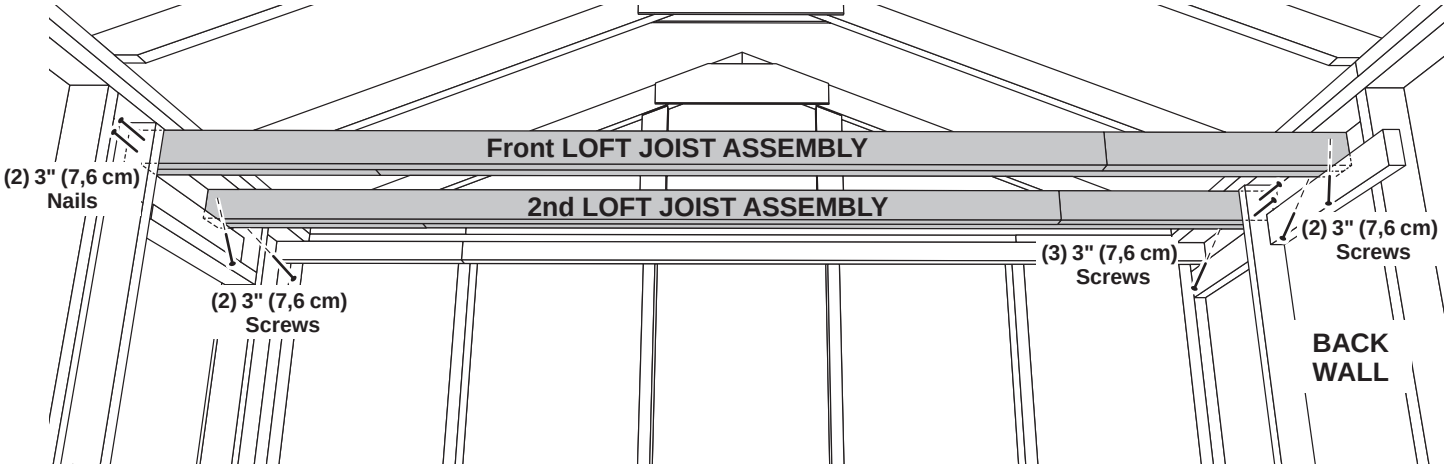

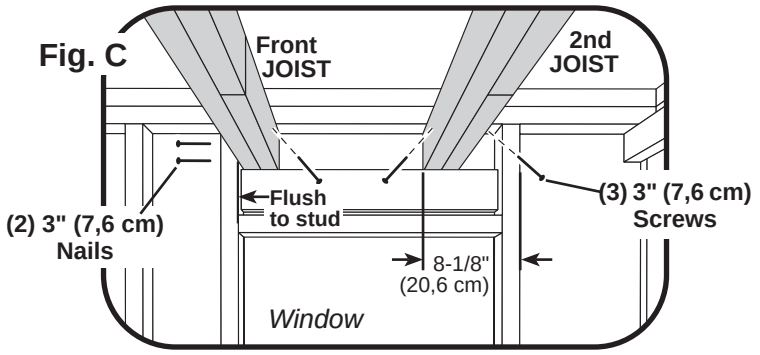

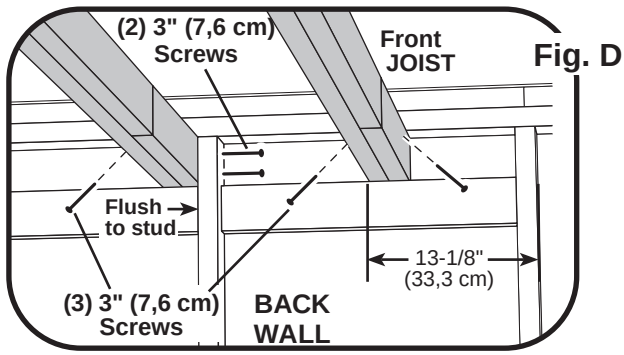

2 Lift and position the 2nd loft joist on loft supports, flush to back wall stud **(Fig. D)** and at the measurement shown from the stud **(Fig. C)**.

Secure with 3" screws screws angled up into top plate on the window side **(Fig. C)**.

At the back wall side **(Fig. D)**, secure joist with (1) 3" screw angled into the top plates and (2) 3" screws through stud.

Predrill screw holes with 5/16" bit.

FINISH

Your loft joists are now installed.

WORKBENCH

PARTS REQUIRED:

x2 — 3" (7,6 cm)

x20 — 2" (5,1 cm)

☐ x5 — 14-1/4 x 22-1/4" (36 x 56,5 cm)

☐ x6 **LR** — 2 x 3 x 19" (5,1 x 7,6 x 48,3 cm)



BEGIN

1 Assemble (5) workbench brackets. Install brackets flush to end of **LR**.
Secure brackets to **LR** with (4) 2" nails.

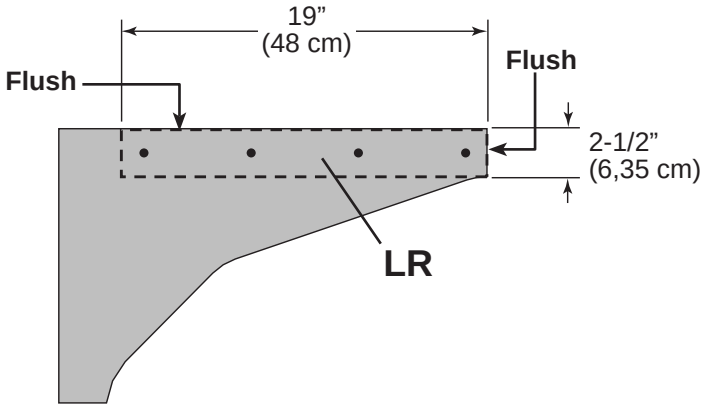

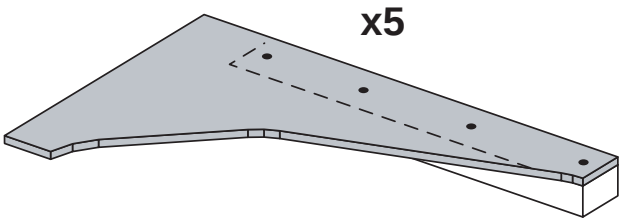

2 Install (1) bench support **LR** at measurements shown and flush to left side of stud, as shown.
Ensure **LR** is level.
Secure with (2) 3" nails.

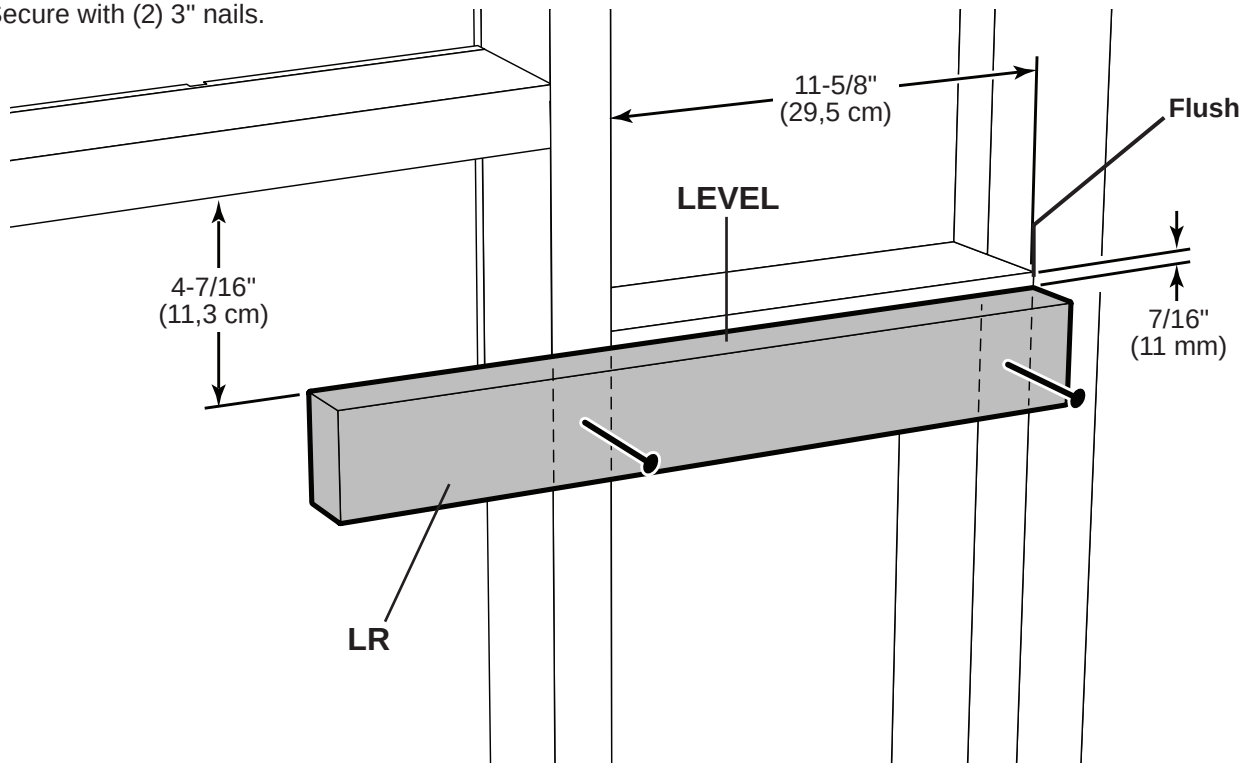

WORKBENCH

PARTS REQUIRED:

x15

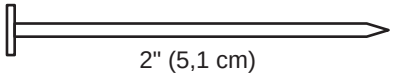

2" (5,1 cm)



3 Install (5) bench brackets at measurement shown from floor, level and flush to wall studs **(Fig. A)**. Secure with 2" nails.

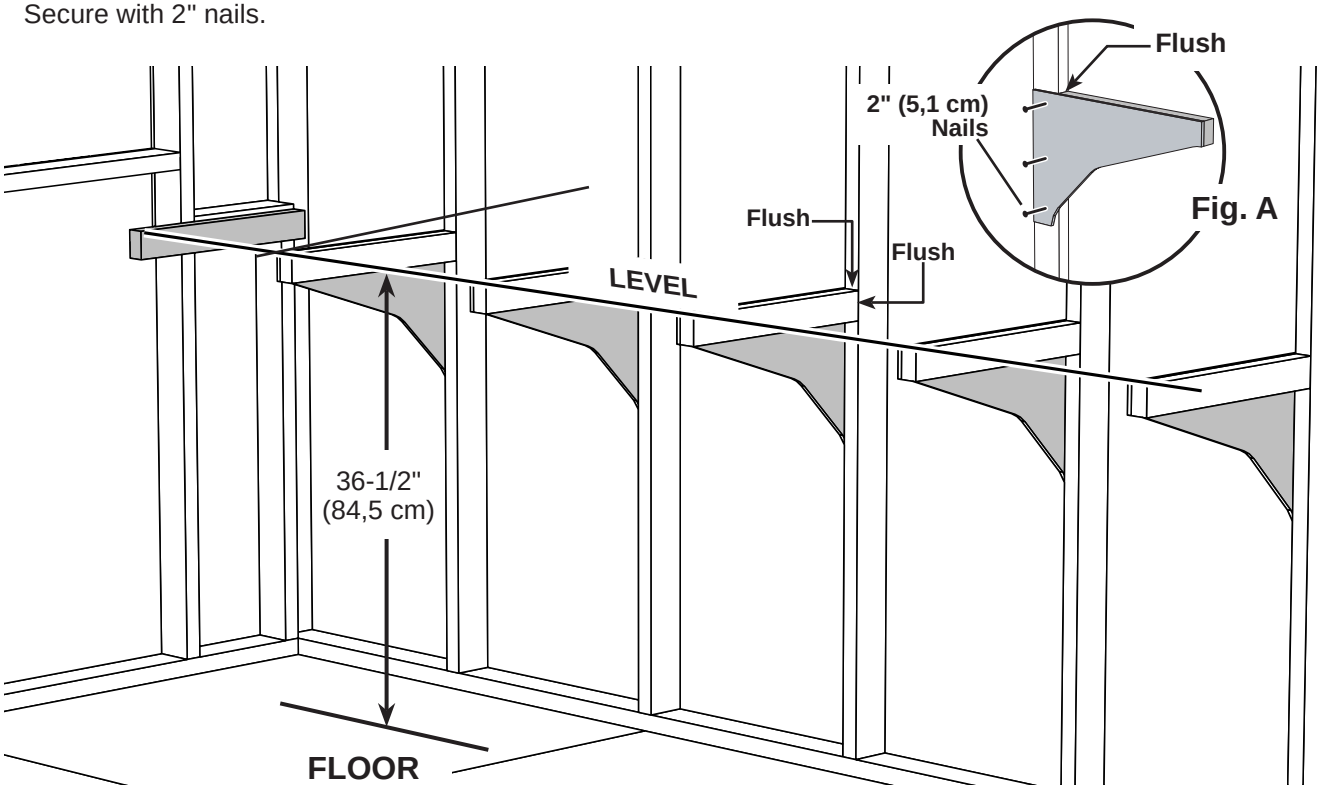

WORKBENCH

PARTS REQUIRED:

x1 **BA**
1 x 4 x 20-1/2" (2,5 x 10,2 x 52,1 cm)

x1 **KP**
1 x 4 x 96" (2,5 x 10,2 x 243,9 cm)

x1
19-1/2 x 23-7/8"
(49,5 x 60,6 cm)

x1
19-1/2 x 92-1/2" (49,5 x 235 cm)

x1
3" (7,6 cm)

x34
2" (5,1 cm)



4 Install **19-1/2" x 92-1/2"** and **19-1/2" x 23-7/8"** bench panels across bench supports, flush at seam and flush to wall studs.
Secure with (3) 2" nails in each bench support.

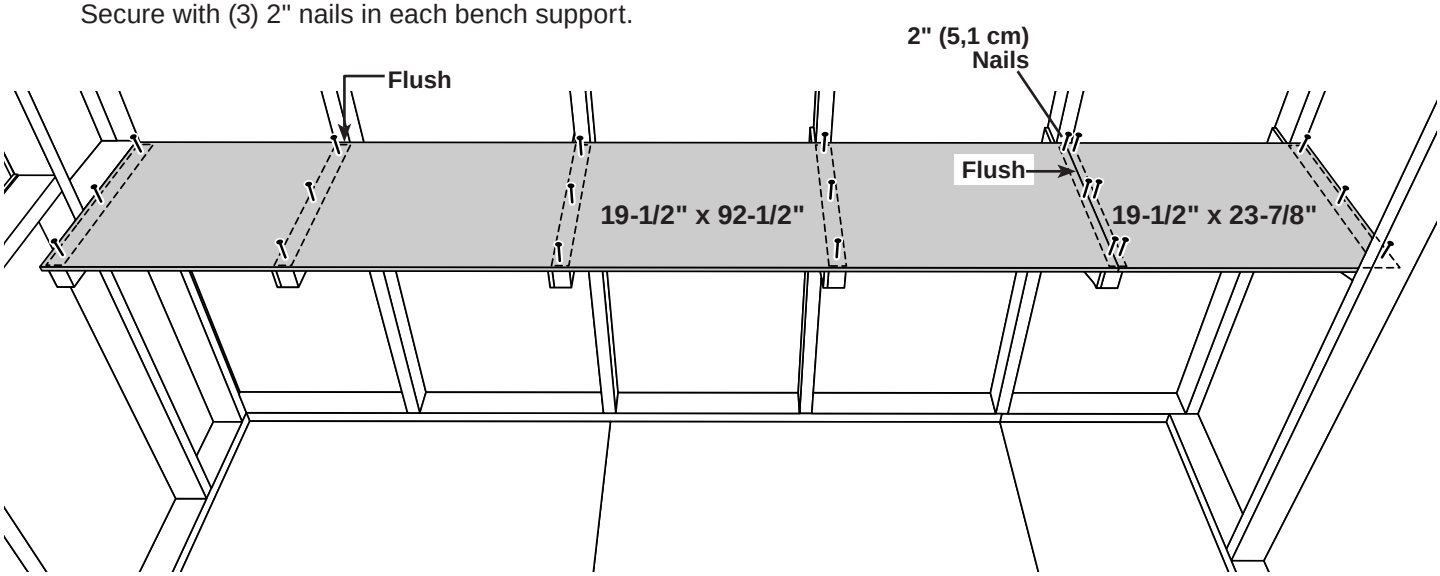

5 Install fascia **KP** *(Install **KP** first)* and **BA** flush to underside of bench top **(Fig. B)**.
Secure fascia with (2) 2" nails in each bench support.
Secure right end of **KP** with (1) 3" screw.

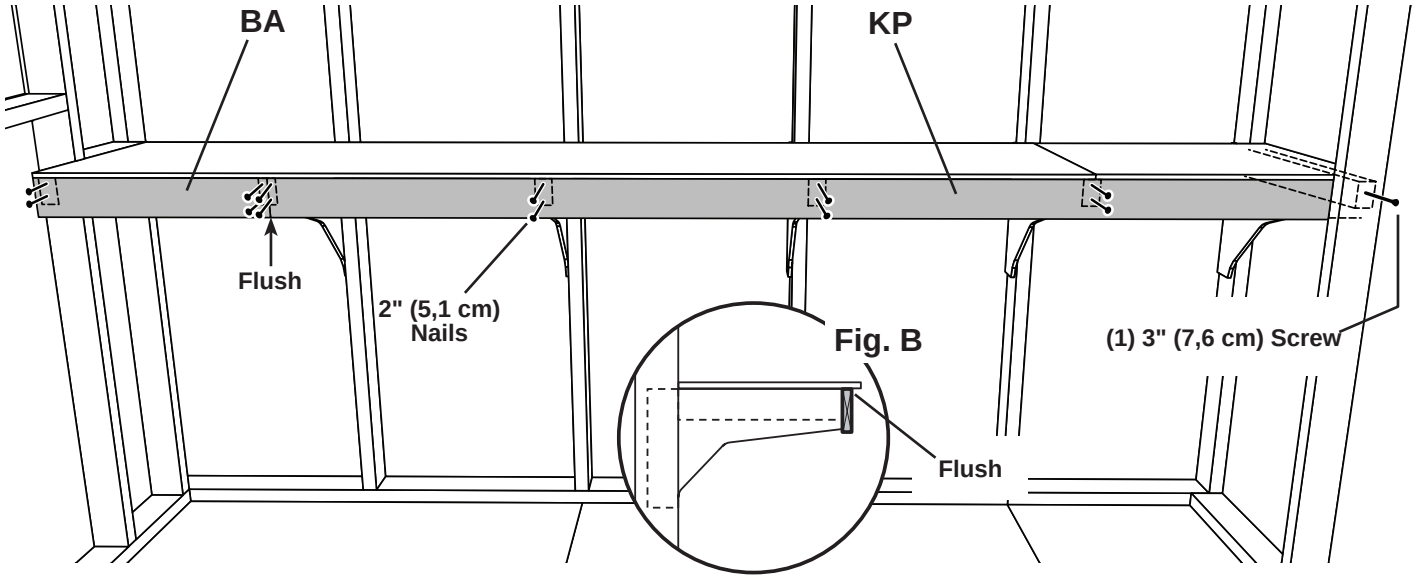

PEGBOARD

PARTS REQUIRED:

x35 — 2" (5,1 cm)

x1 **BE** — 1 x 3 x 96" (2,5 x 7,6 x 243,9 cm)

x1 **BC** — 1 x 3 x 23-78" (2,5 x 7,6 x 60,6 cm)

x1  *PEGBOARD* 23-7/8" x 23-7/8" (60,6 x 60,6 cm)

x1 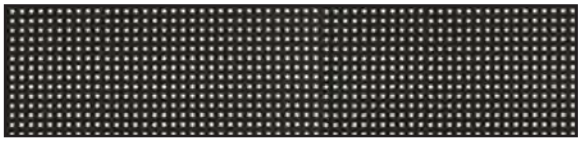 23-7/8" x 96" (1,1 x 60,6 x 243,9 cm) *PEGBOARD*



BEGIN

1 Install pegboard flush together and flush to bench top.
Secure to studs with 2" nails through holes in pegboard, as shown.

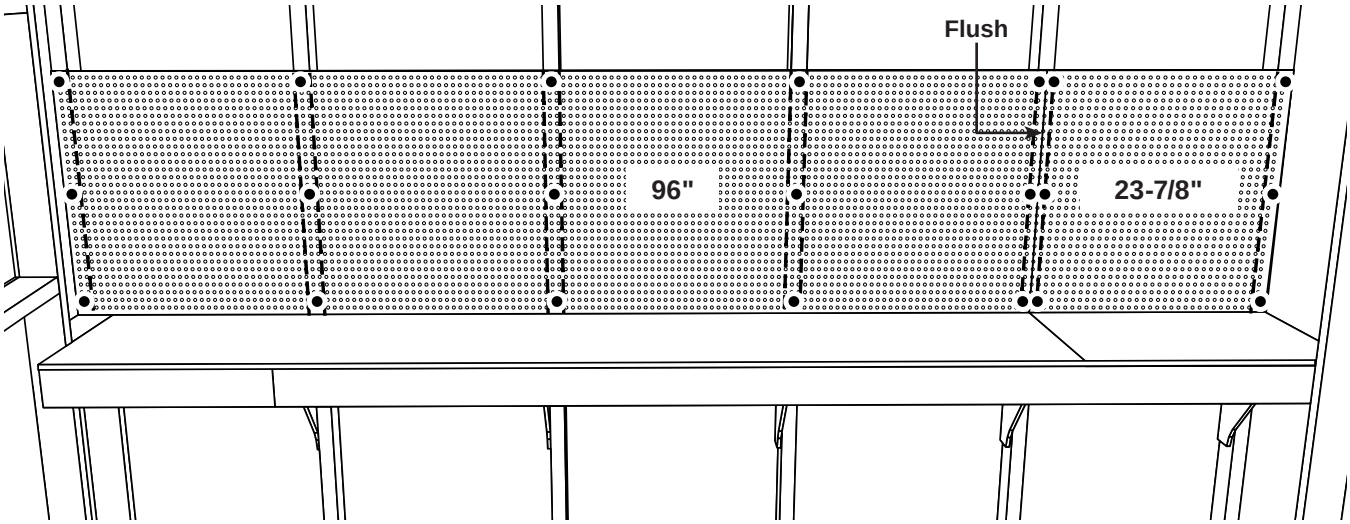

2 Install bench backer boards **BE** and **BC** flush to bench top.
Secure with (2) 2" nails.

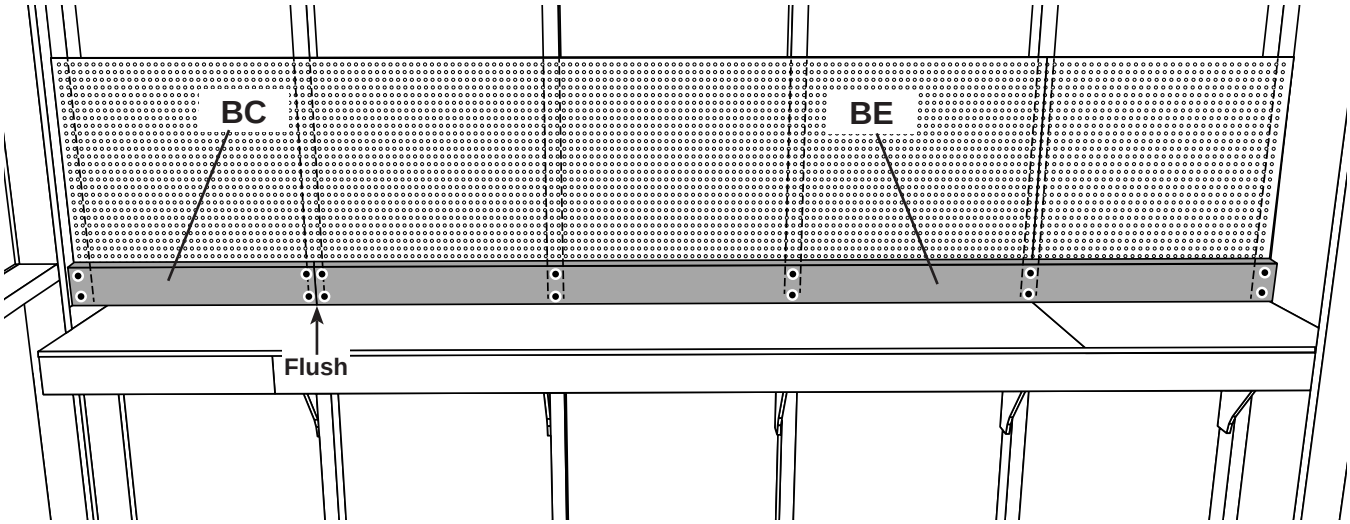

SHELF

PARTS REQUIRED:

x1 **BC**
1 x 3 x 23-78" (2,5 x 7,6 x 60,6 cm)

x6 **AC** 2 x 3 x 10" (5,1 x 7,6 x 25,4 cm)

x1 **BE**
1 x 3 x 96" (2,5 x 7,6 x 243,9 cm)

x12
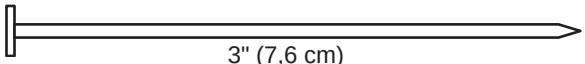
3" (7,6 cm)

x14
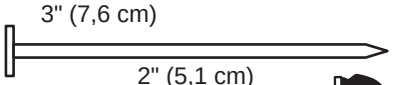
2" (5,1 cm)



✓**BEGIN**

1 Assemble shelf frame on a flat surface.
Secure parts with 2" nails, as shown.

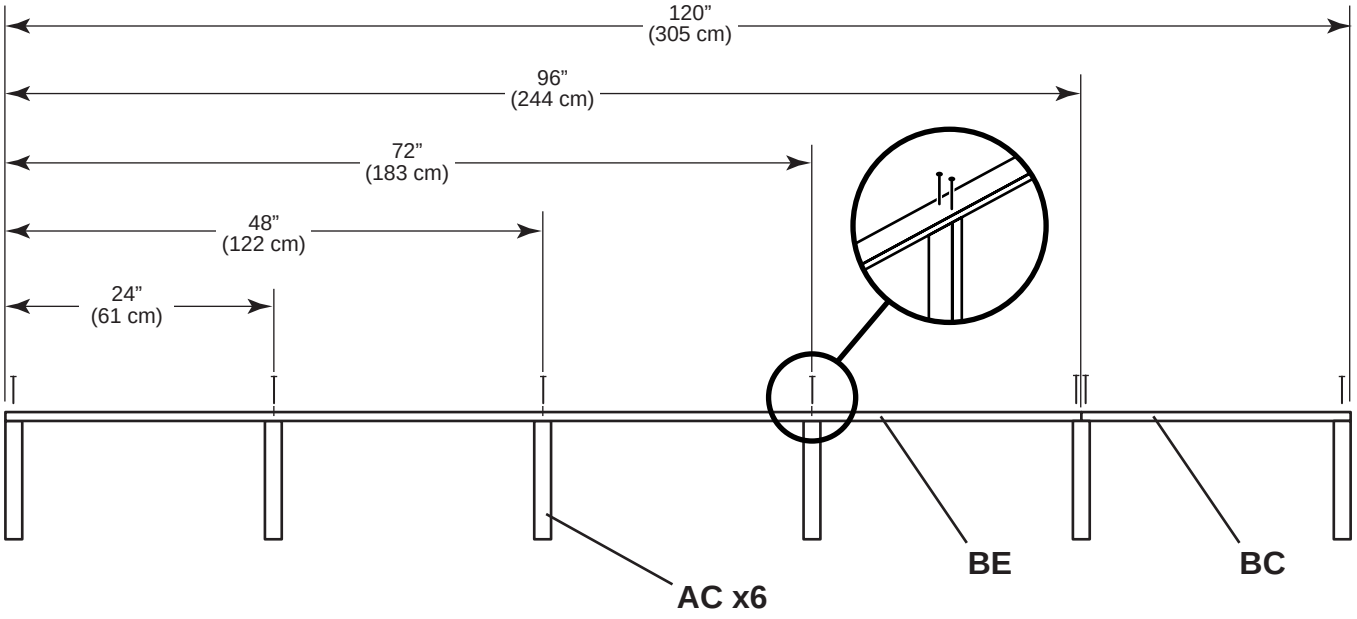

2 Install shelf frame flush along the top of pegboard.
Secure with (2) 3" nails to studs, angled in each support **AC**.

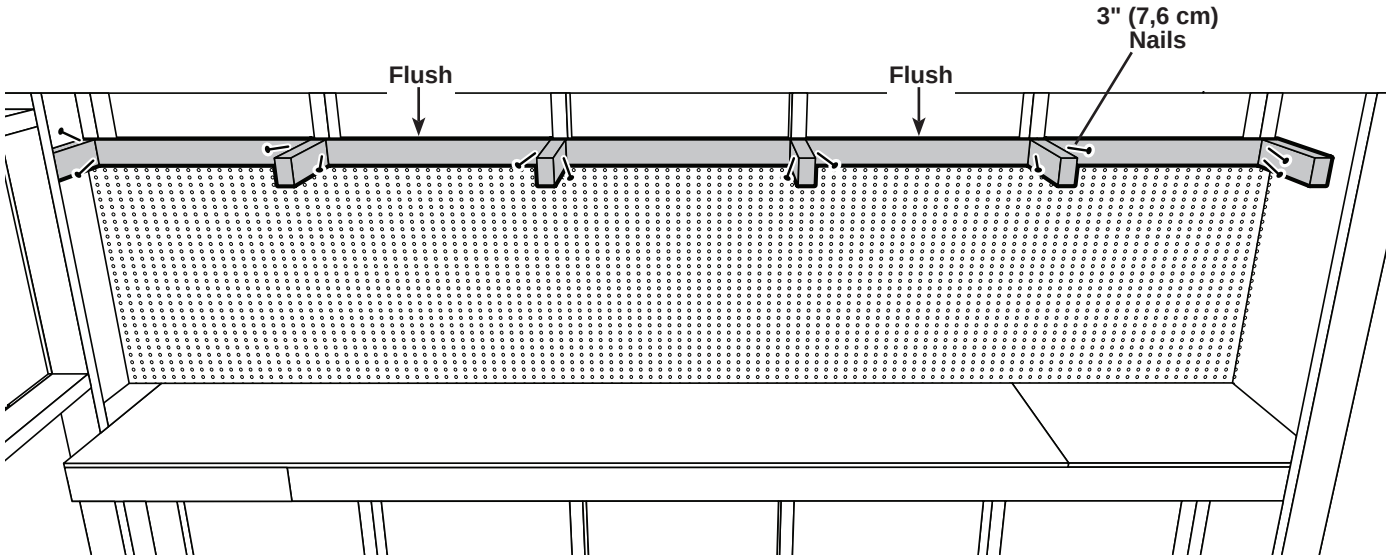

SHELF

PARTS REQUIRED: x1 **JS**
1 x 4 x 23-78"
(2,5 x 10,2 x 60,6 cm)

x1 **KP**
1 x 4 x 96" (2,5 x 10,2 x 243,9 cm)

x1
7/16 x 11-1/2 x 23-7/8"
(1,1 x 29,2 x 60,6 cm)

x1
7/16 x 11-1/2 x 96"
(1,1 x 29,2 x 243,9 cm)

x1 3" (7,6 cm)

x12 2" (5,1 cm)

x14 1-1/4" (3,2 cm)



3 Install **11-1/2" x 23-7/8"** and **11-1/2" x 96"** bench panels across shelf frame, flush at seam and flush to wall studs. Secure with (2) 1-1/4" screws in each support **AC**.
Maintain 24" (61 cm) between supports.

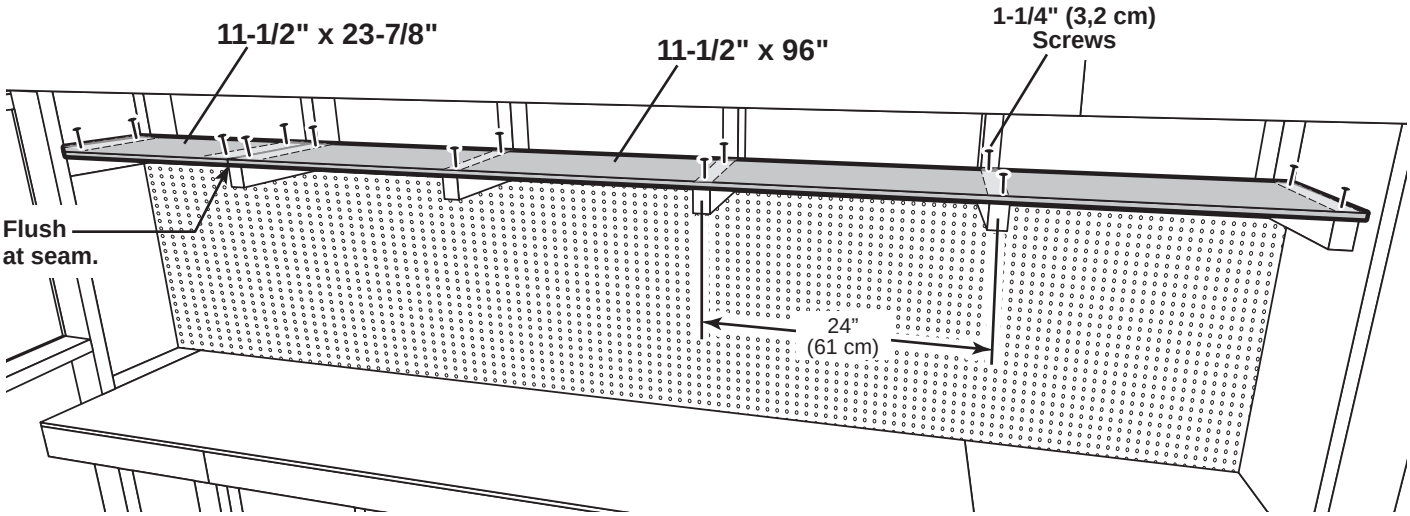

4 Install shelf fascia **KP** and **JS** flush to underside of shelf top **(Fig. C)**.
Secure fascia with (2) 2" nails in each shelf support.
Secure left shelf support **AC** with (1) 3" screw.

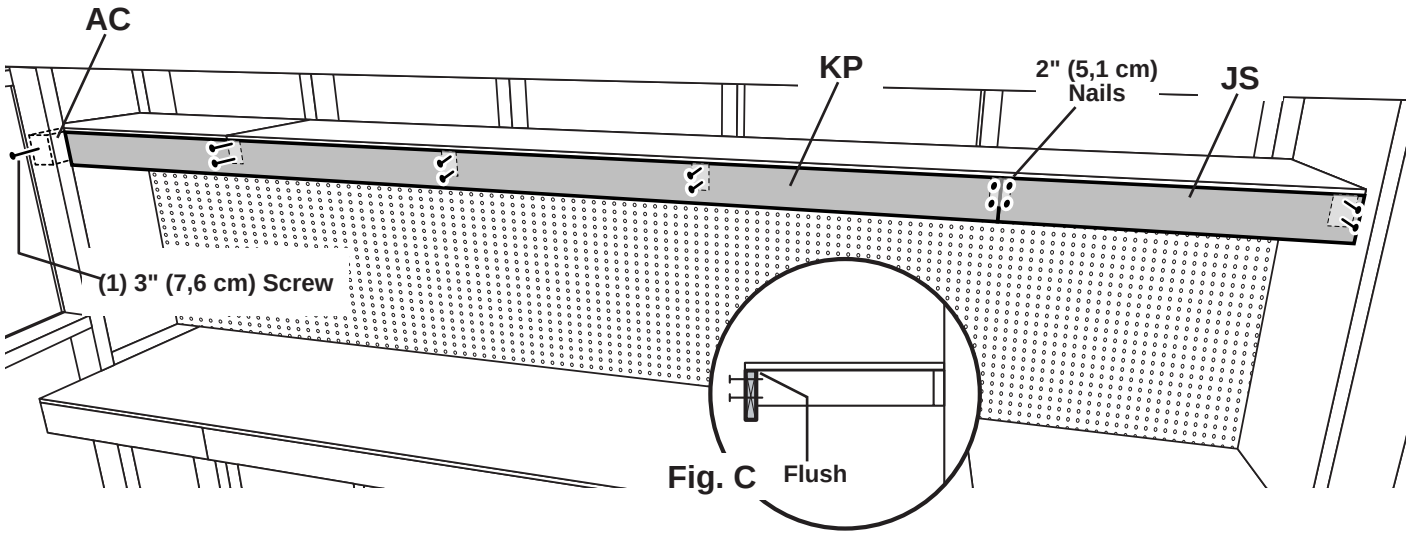

Fig. C

SHELF

PARTS REQUIRED:

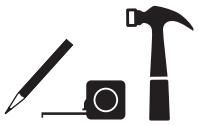

x6

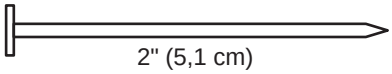

2" (5,1 cm)

5 Reinforce left shelf support from outside.
Working outside, measure according to the diagram **(Fig. D)** and mark location of the shelf support.
Secure with (3) 2" nails.

Fig. D

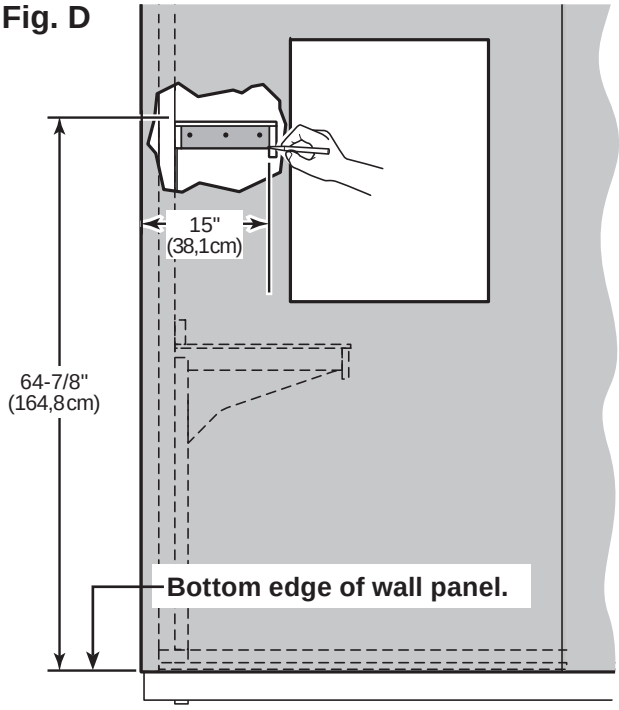

Repeat step 5 to secure right side shelf support to the back wall.

FINISH

Your workbench, pegboard and shelf are now installed.

LOFT PANELS

PARTS REQUIRED:

x36

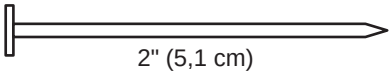

2" (5,1 cm)

x1



36" x 23-7/8" (40,3 x 60,6 cm)

x1



36" x 96" (60,6 x 244 cm)



BEGIN

1 Install loft panels centered over loft joists and ledger board.

Secure with 2" nails spaced evenly (approximately 12" apart).

Note: There will be a 1/2" gap either side of the loft deck.

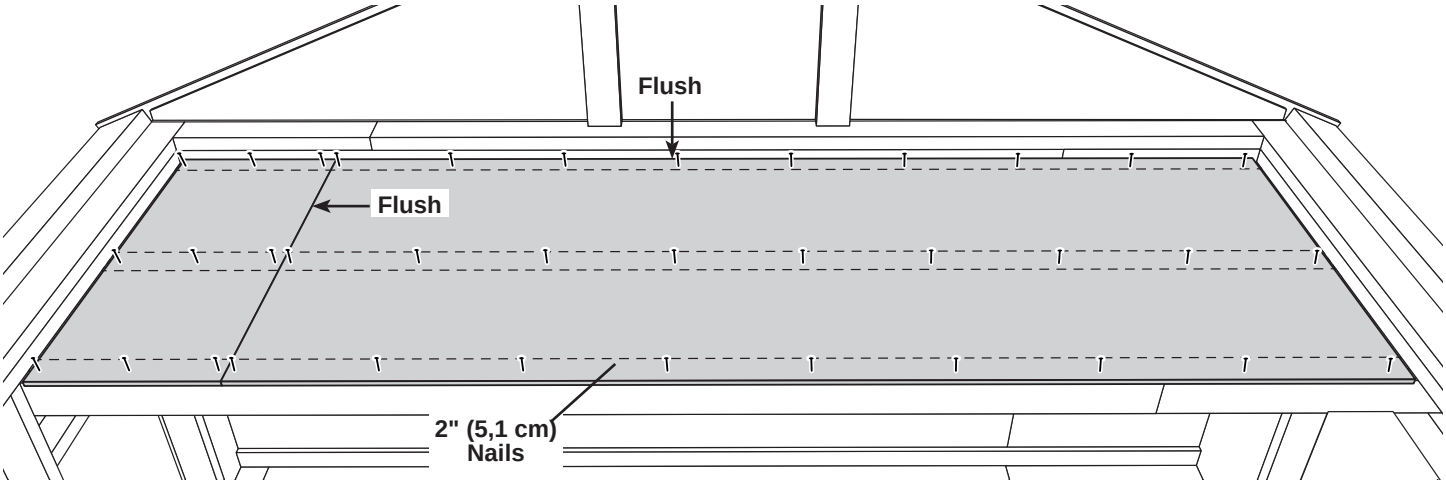

FINISH

Your loft panels are now installed.

DOORS

PARTS REQUIRED:

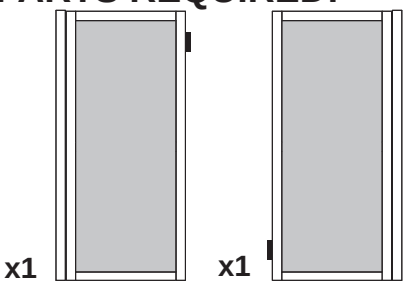

x1 Left Door

x1 Right Door

x4

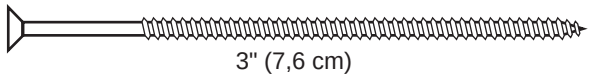

3" (7,6 cm)

x2

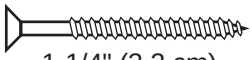

1-1/4" (3,2 cm)

x1 **GAA**

1 x 3 x 5" (2,5 x 7,6 x 12,7 cm)

x1 **OO**

69" (175,3 cm) Door Stiffener

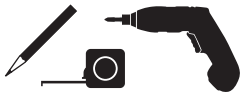

BEGIN

1 Place doors on flat surface. **3/8" offset is to top.**
Look for red (right) and green (left) on hinge board.

Attach temporary supports **OO** and **GAA** as shown.

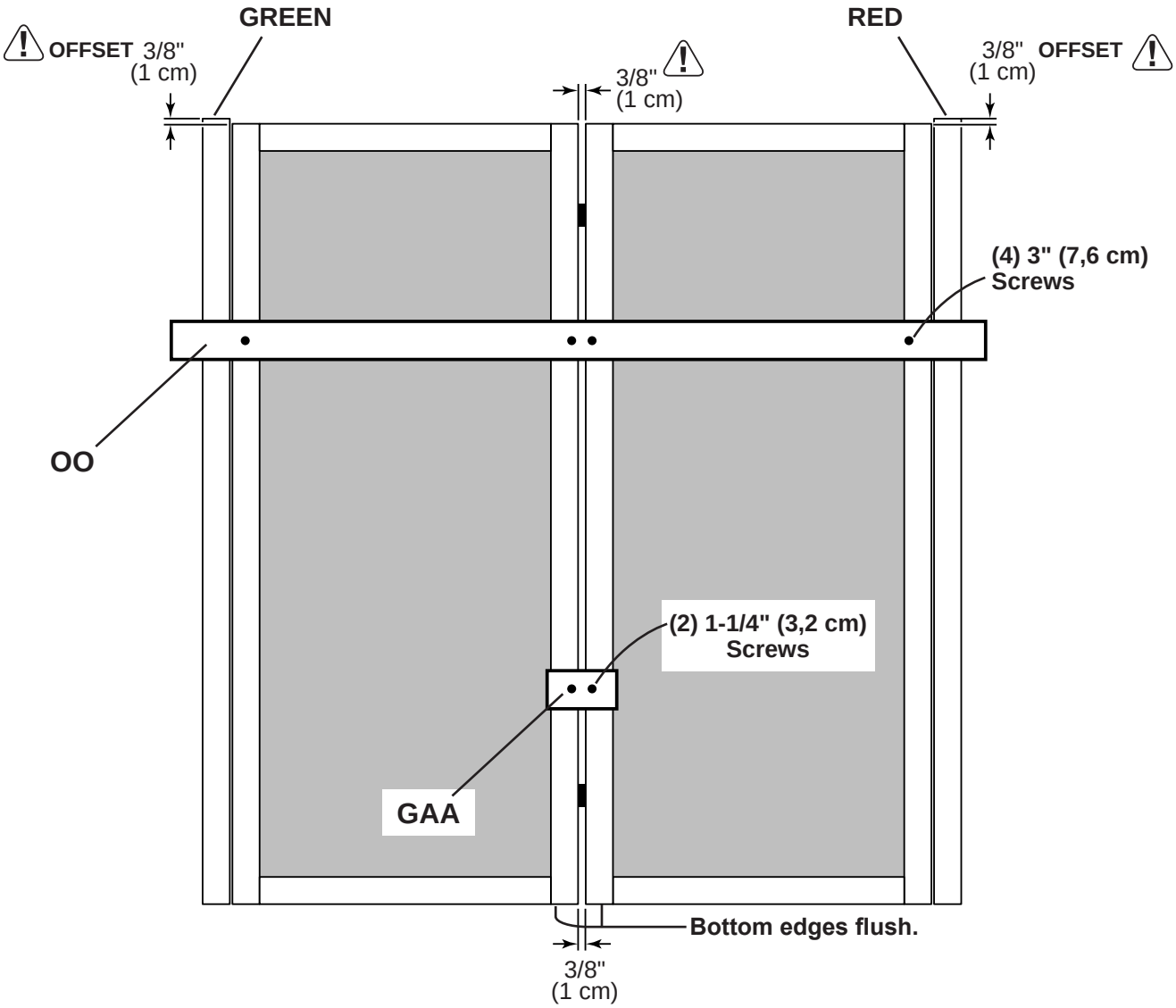

DOORS

PARTS REQUIRED:

x1 | **OO** | ***TEMPORARY SUPPORT***

69" (175,3 cm) Door Stiffener

x12

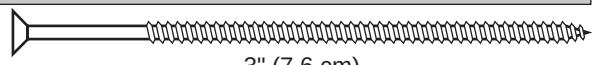

3" (7,6 cm)

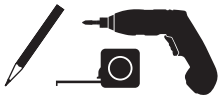

2 Install **OO** flush under panels.
Secure to floor frame with (2) 3" screws **(Fig. A)**.
Mark center of door opening.

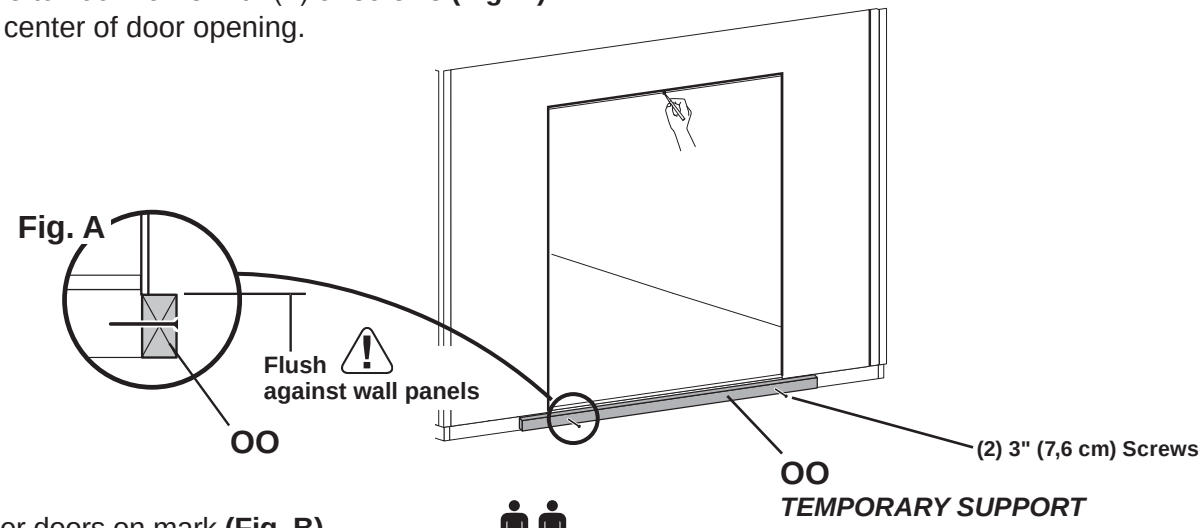

3 Center doors on mark **(Fig. B).**



4 Screw hinge boards into wall supports with (10) 3" screws, as shown.
⚠ **Make sure screws go into framing**.

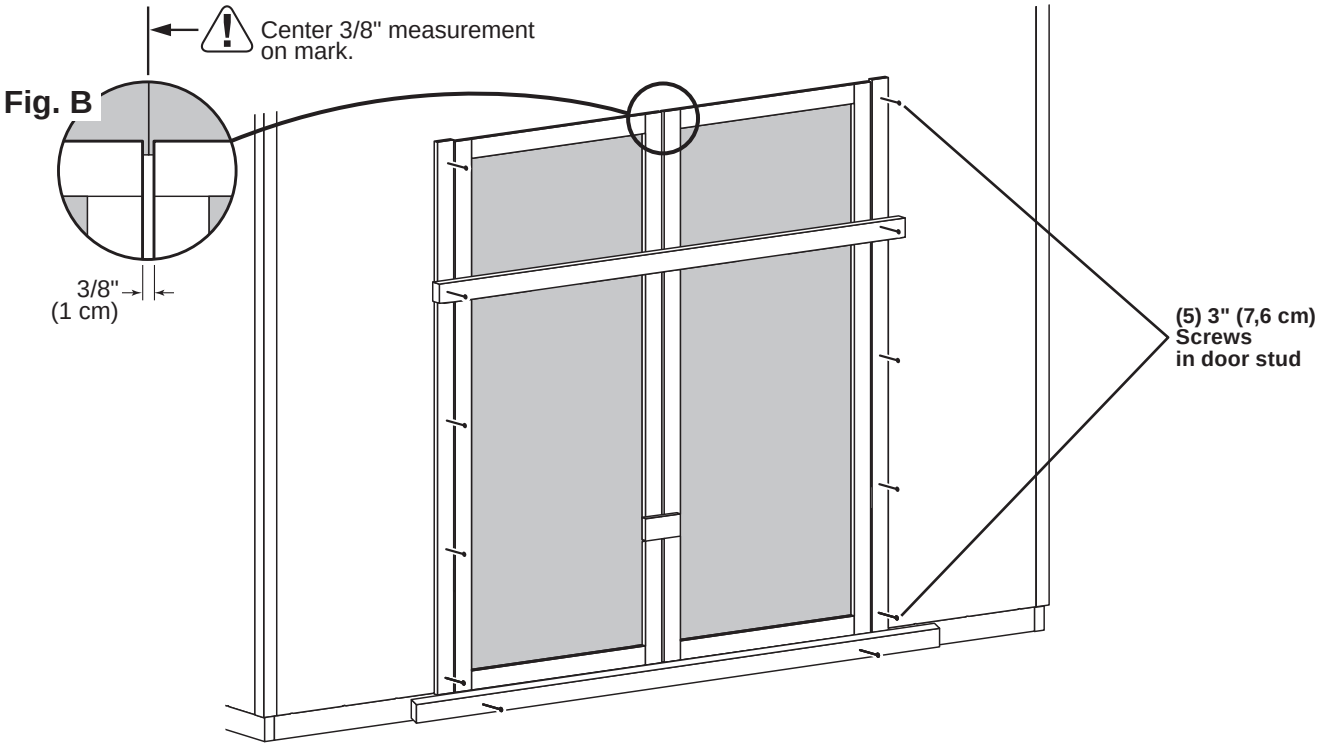

Remove temporary supports and check to make sure doors open and close properly.

FINISH

Your doors are now installed.

DOOR STIFFENERS

PARTS REQUIRED:

x14 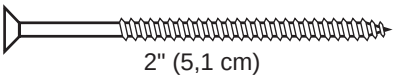

x2 **OO**
69" (175,3 cm) Door Stiffener



BEGIN

1 Center **OO** vertically on the left door in the doorway **(Fig. A)** overlapping 1" (2,5 cm) along the edge of door **(Fig. B)**.
Secure with (7) 2" screws through outside trim into **OO**.

2 Center **OO** vertically on the right door in the door opening offset 1" (2,5 cm) from the edge of door **(Fig. B)**.
Secure with (7) 2" screws through outside trim into **OO**.

Fig. A

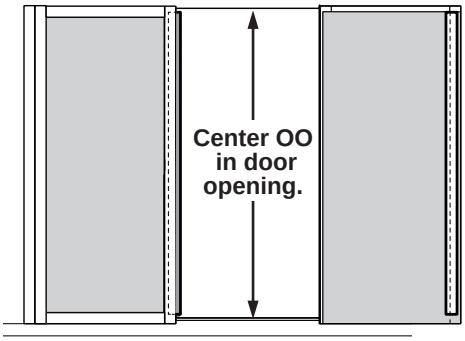

IT IS IMPORTANT TO HOLD THESE DIMENSIONS

Fig. B

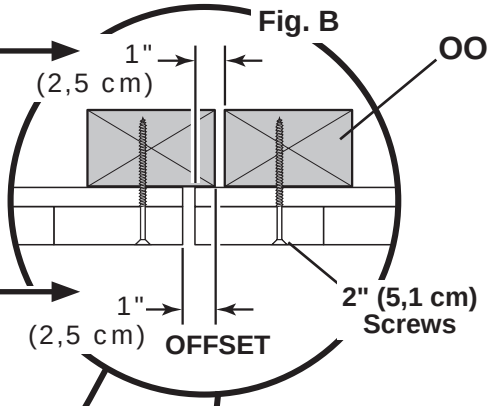

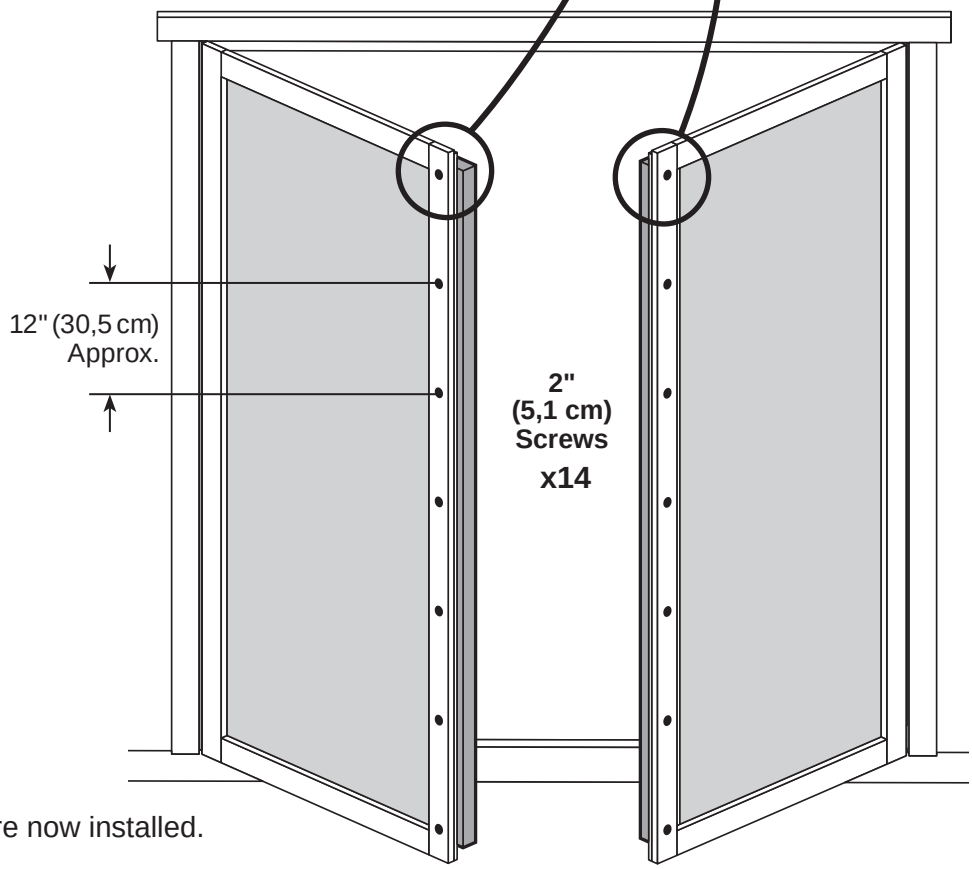

FINISH

Your door stiffeners are now installed.

DOORS

PARTS REQUIRED:

x2 AH
19/32" x 2-1/2" x 26 5/8" (1,5 x 6,3 x 67,6 cm)

x1 AHR
19/32" x 2-1/2" x 62" (1,5 x 6,3 x 157,5 cm)

x1 AHL
19/32" x 2-1/2" x 62" (1,5 x 6,3 x 157,5 cm)

x7
2" (5,1 cm)

x1
64" Metal Threshold

x1 ZJ
19/32" x 2-1/2" x 72" (1,5 x 7,6 x 182,9 cm)

x11
3/4" (1,9 cm)
Bagged separately/
special coating

x62
3/4" (1,9 cm)

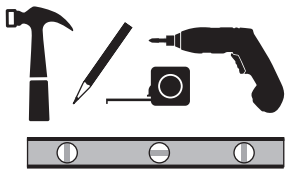

BEGIN

1. Install trim **AH**, **AHL** and **AHR** as shown. Level **AH** before installing. Fasten trim to each door from inside with (11) 3/4" screws **(Fig. A, Fig B)**.

2. Center trim **ZJ** over doors and secure with (7) 2" finishing nails into framing as shown.

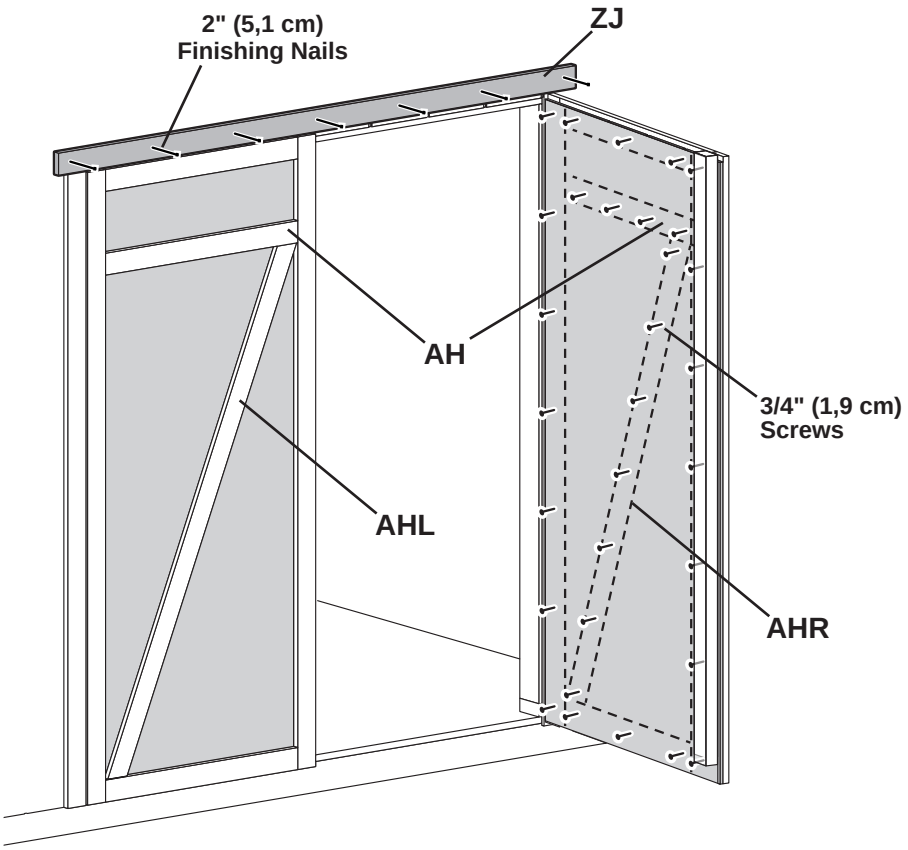

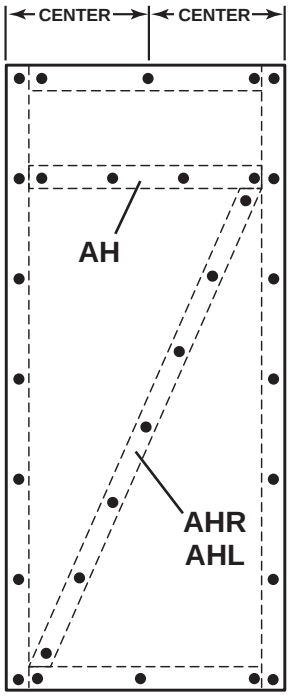

Fig. B

3. Install 64" metal threshold with (11) 3/4" screws.

(11) Special Coating Screws

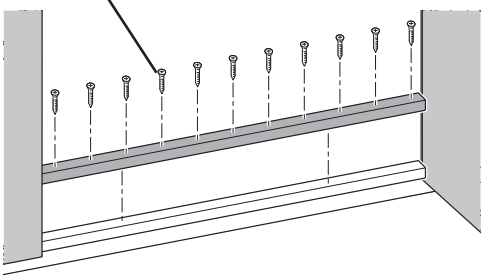

FINISH

Your door trim and metal threshold are now installed.

DOOR HARDWARE

PARTS REQUIRED:

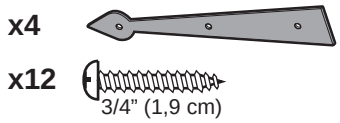

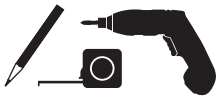

BEGIN

1 Install decorative hinges in locations shown. Secure with 3/4" screws.

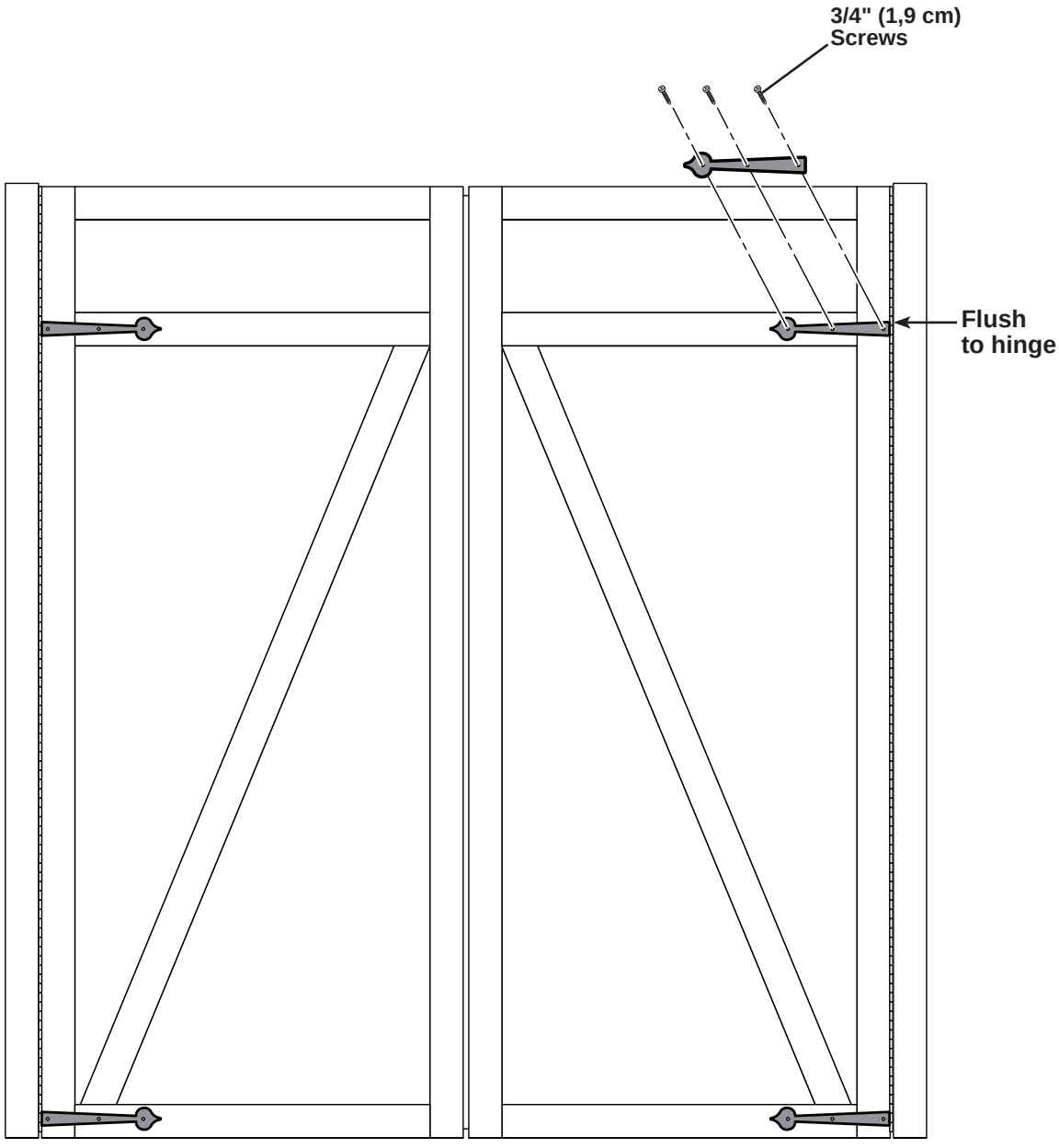

FINISH

Your decorative door hinges are now installed.

DOOR HARDWARE

PARTS REQUIRED:

x2 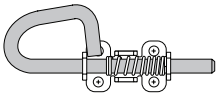

x8  3/4" (1,9 cm)



BEGIN

1 Place bolt on **OO** in open position with bolt end 3/8" (9,5 mm) down from frame. Bolt is open when loop is contacting base **(Fig A)**.

2 Mark and pre-drill holes for screws. Install bolt with screws supplied.

Drill 5/16" (7,9 mm) hole deep enough for bolt to slide into.

3 Place bolt on **OO** in open position with bolt end 1/2" (12,7 mm) up from floor. Bolt is open when loop is connecting base **(Fig. B)**.

4 Mark and pre-drill holes for screws. Install bolt with screws supplied.

Drill 5/16" (7,9 mm) hole deep enough for bolt to slide into.

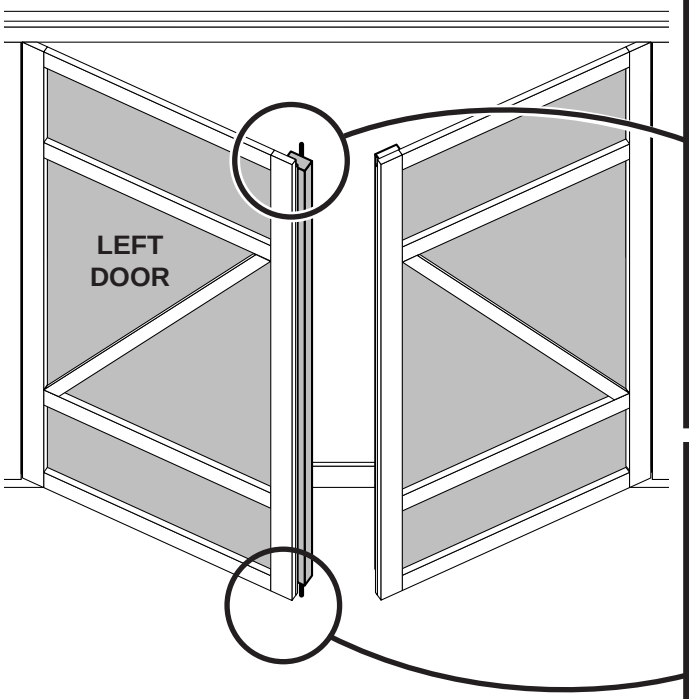

Fig. A

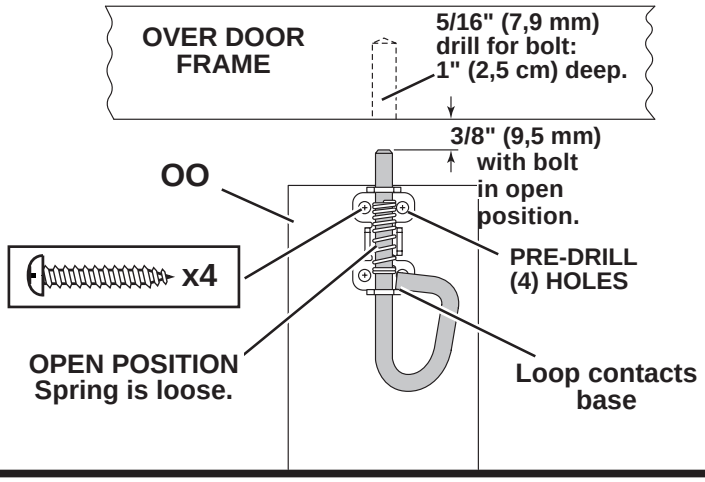

Fig. B

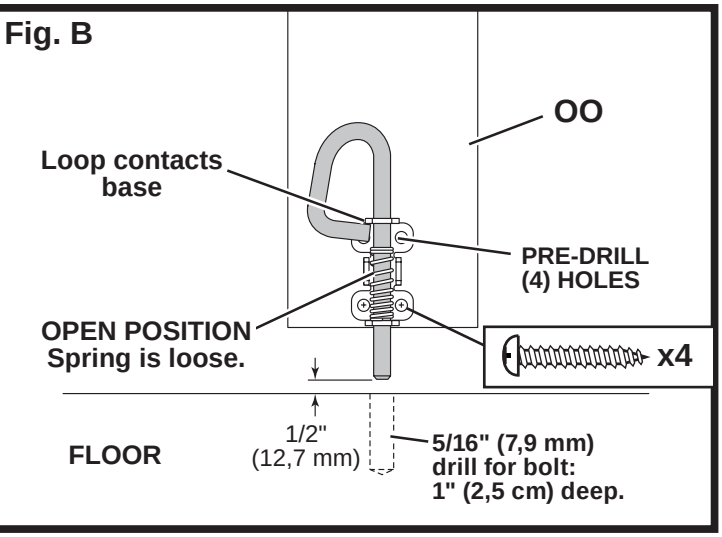

FINISH

Your spring bolts are now installed.

DOOR HARDWARE

PARTS REQUIRED:

x1

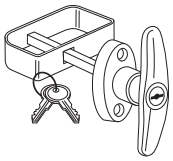

x2

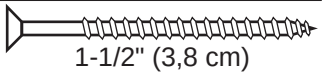

1-1/2" (3,8 cm)

3/8" (10,9 cm) Drill Bit

1/4" (0,6 cm) Drill Bit



3 Measure and mark location of hole on outside of right door as shown **(Fig. A)**. Pre-drill hole with 1/4" drill.

Re-drill hole with 3/8 " drill.

⚠ Keep drilled hole square to trim to avoid breaking edge of door stiffener.

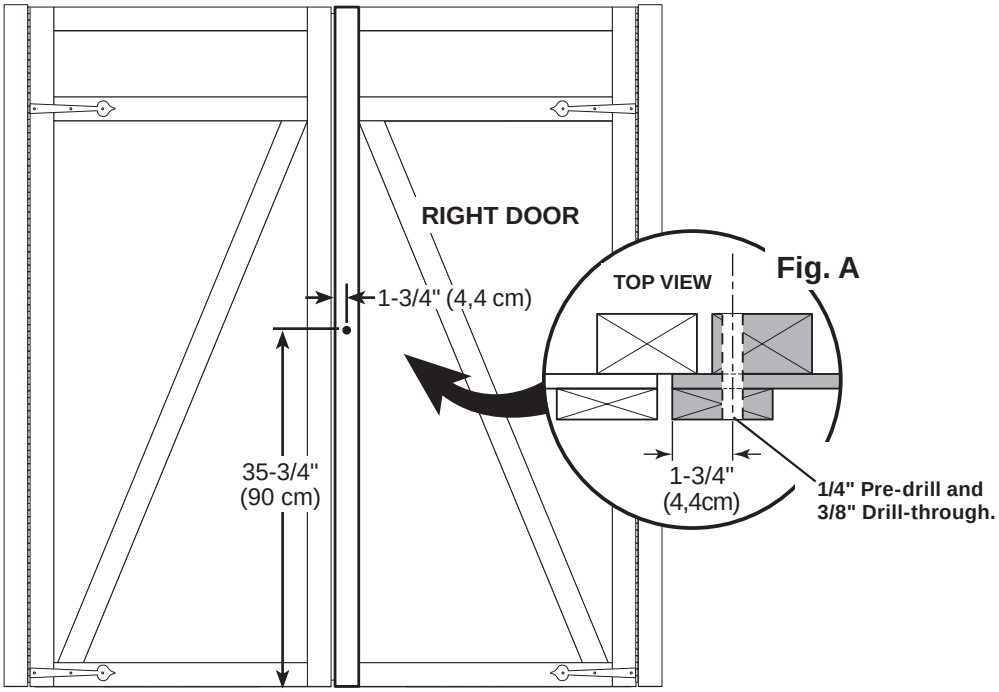

4 Insert handle in hole and secure with 1-1/4" screws.

Attach inside handle and secure with set screw as shown.

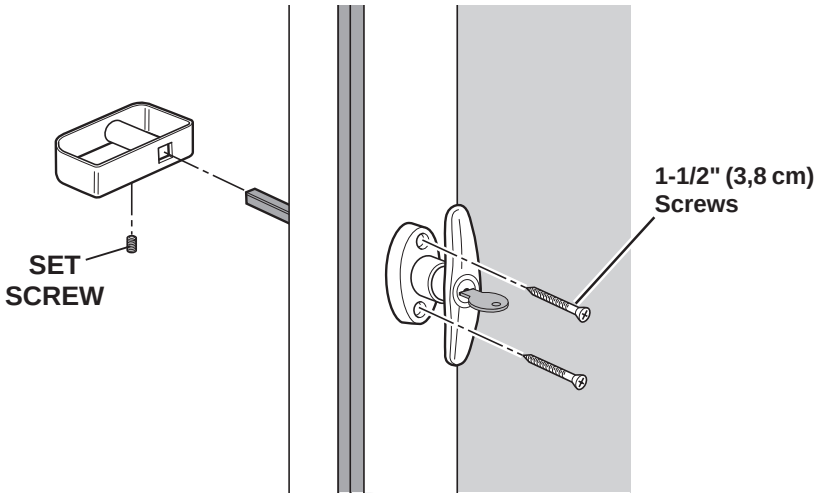

FINISH

Your spring bolt, T-handle and decorative hinges are now installed.

WINDOW SHUTTERS

PARTS REQUIRED:

x4 DF — 19/32" x 3" x 8-1/2" (1,5 x 7,6 x 21,6 cm)

x1 BWL — 19/32" x 3" x 21" (1,5 x 7,6 x 53,3 cm)

x1 BWR — 19/32" x 3" x 21" (1,5 x 7,6 x 53,3 cm)

x6 AZ — 19/32" x 3" x 30-1/8" (1,5 x 7,6 x 76,5 cm)

x22 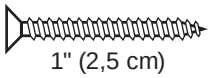 1" (2,5 cm)

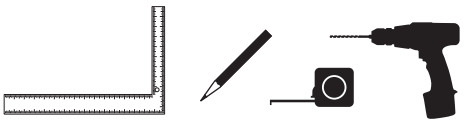

You will build one left shutter and one right shutter *(Fig. A)*.

Fig. A

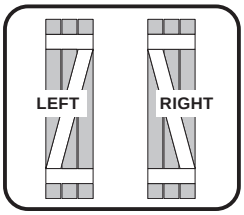

BEGIN

1 Position shutter parts **BWL** and **DF** primed side-down on floor, as shown.

2 Secure slats **AZ** with 1" screws.

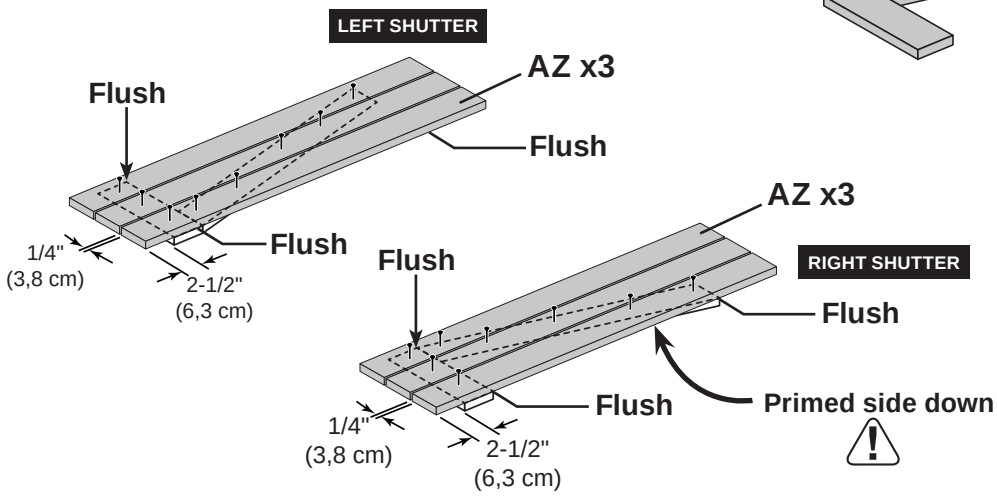

2 Secure **DF** with 1" screws.

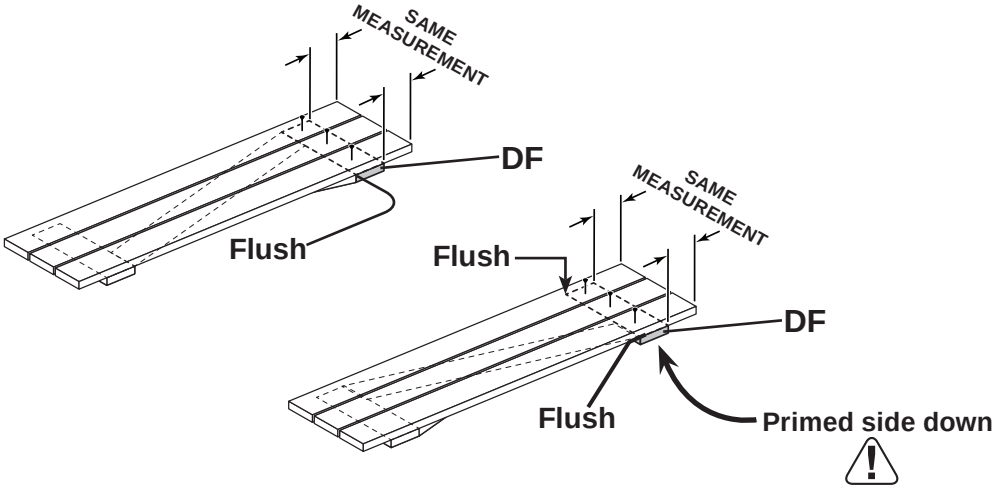

FINISH

You have finished building your window shutters. Proceed to install your window.

PARTS REQUIRED:

x1

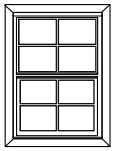

Window
22-1/2" x 29-3/4"
(57,1 x 75,6 cm)

x4

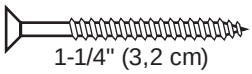

1-1/4" (3,2 cm)

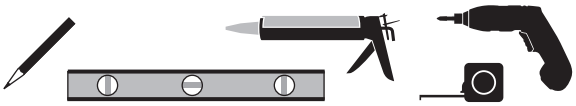

BEGIN

1 Mark center of window frame as shown.

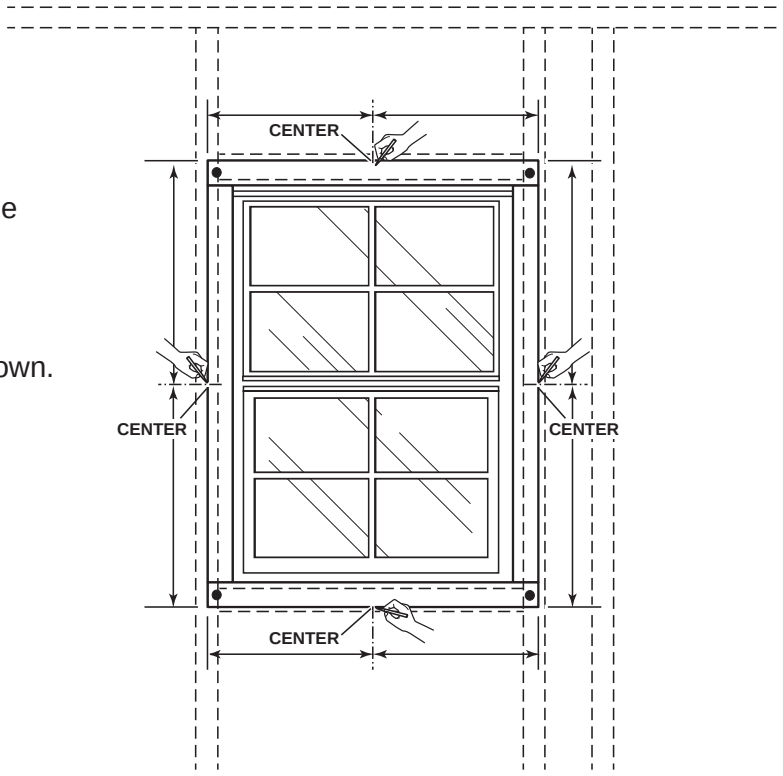

2 Seal window with high-quality exterior-grade caulk before installing **(Fig. A)**.

3 Install window with (4) 1-1/4" screws, as shown. Ensure window is level.

Fig. A

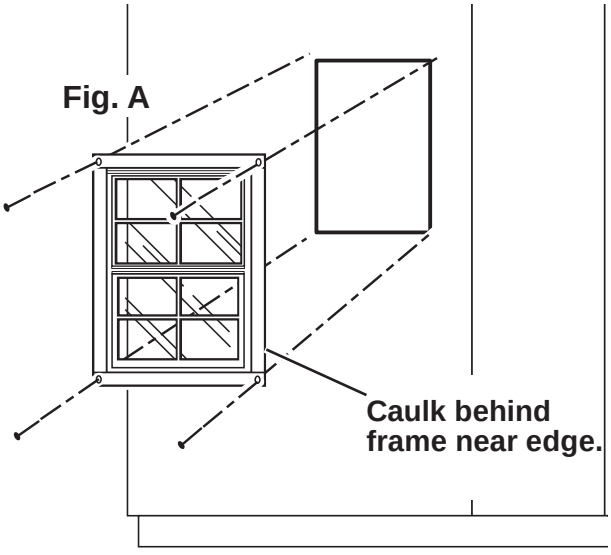

PARTS REQUIRED:

x6 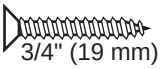

x20 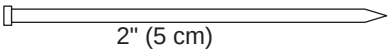

x2 **AH**
19/32" x 2-1/2" x 26-5/8" (1,5 x 7,6 x 67,6 cm)

x1 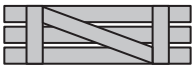

x1 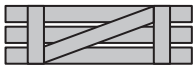

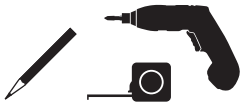

4 Locate one shutter centered on marks as shown.

5 Install one shutter using a 2" finishing nail at "dot".
Nail into wall frame inside.

Working from inside, secure the shutter indicated at "**X**" with (3) 3/4" screws.

Repeat steps to install shutter on opposite side.

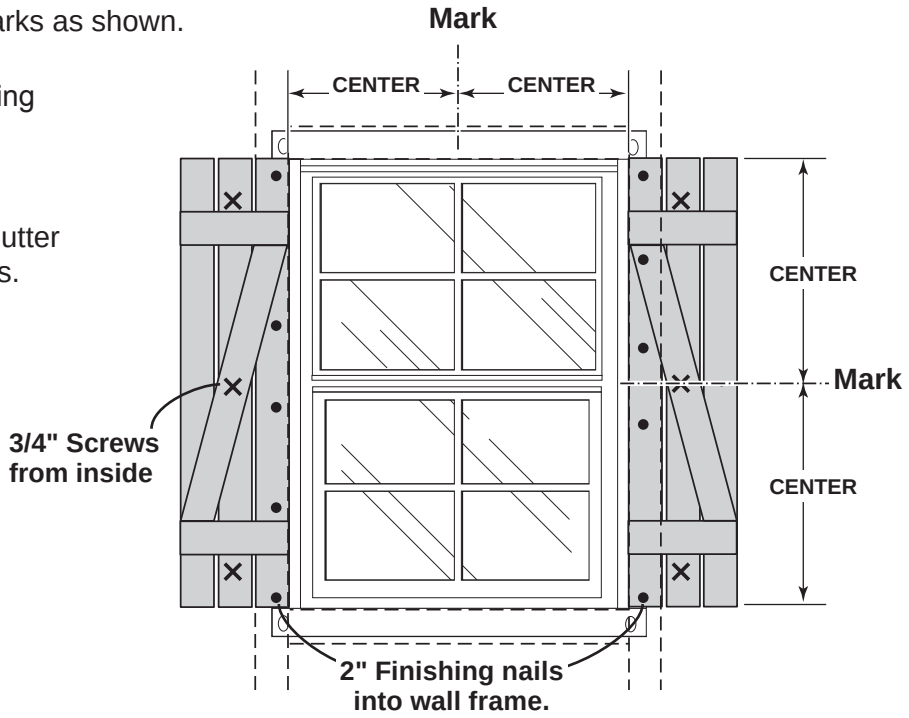

6 Locate **AH** centered on mark and flush to shutters, as shown.
Install with 2" finishing nails.
Nail into window frame inside.

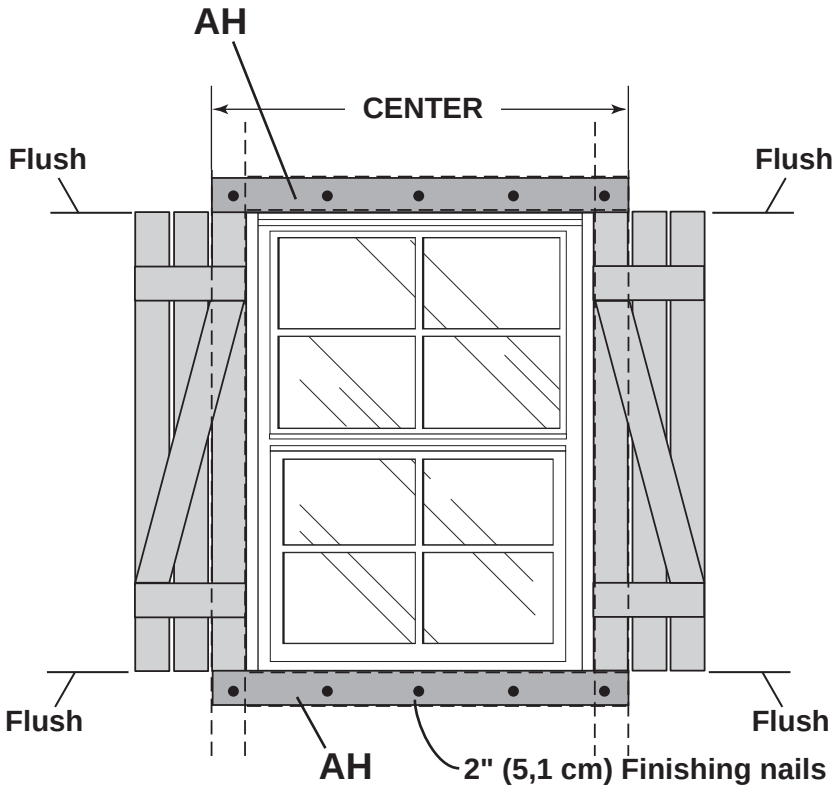



Your window and shutters are now installed.

COLLAR TIE

PARTS REQUIRED:

x1 **TM**
2 x 4 x 72" (5,1 x 10,2 x 182,9 cm)

x6
3" (7,6 cm)

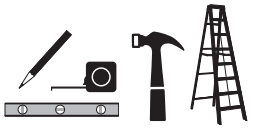

BEGIN

1 Install collar tie **TM** to the 3rd rafter from the front with (3) 3" nails at each end.

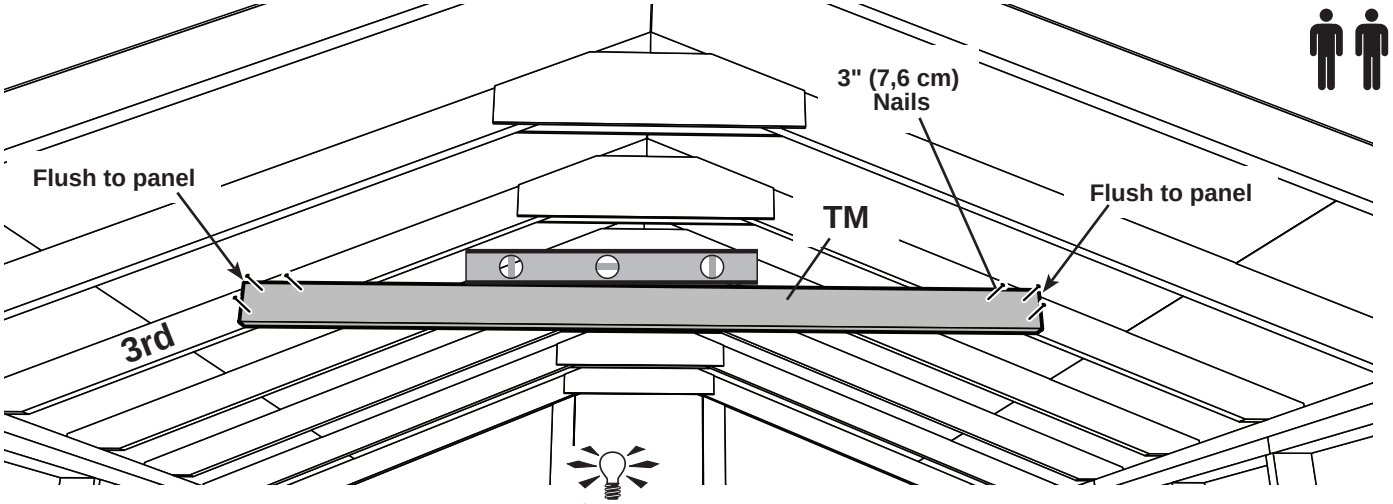

HINT: For best appearance, install collar tie on back side of rafter.

FINISH

Your collar tie is now installed.

HOOK & EYE

PARTS REQUIRED:

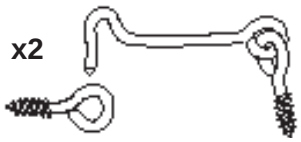

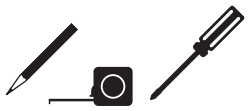

BEGIN

1. Install hooks in wall and into framing behind **(Fig.A)**.

2. Swing door open to locate eye.

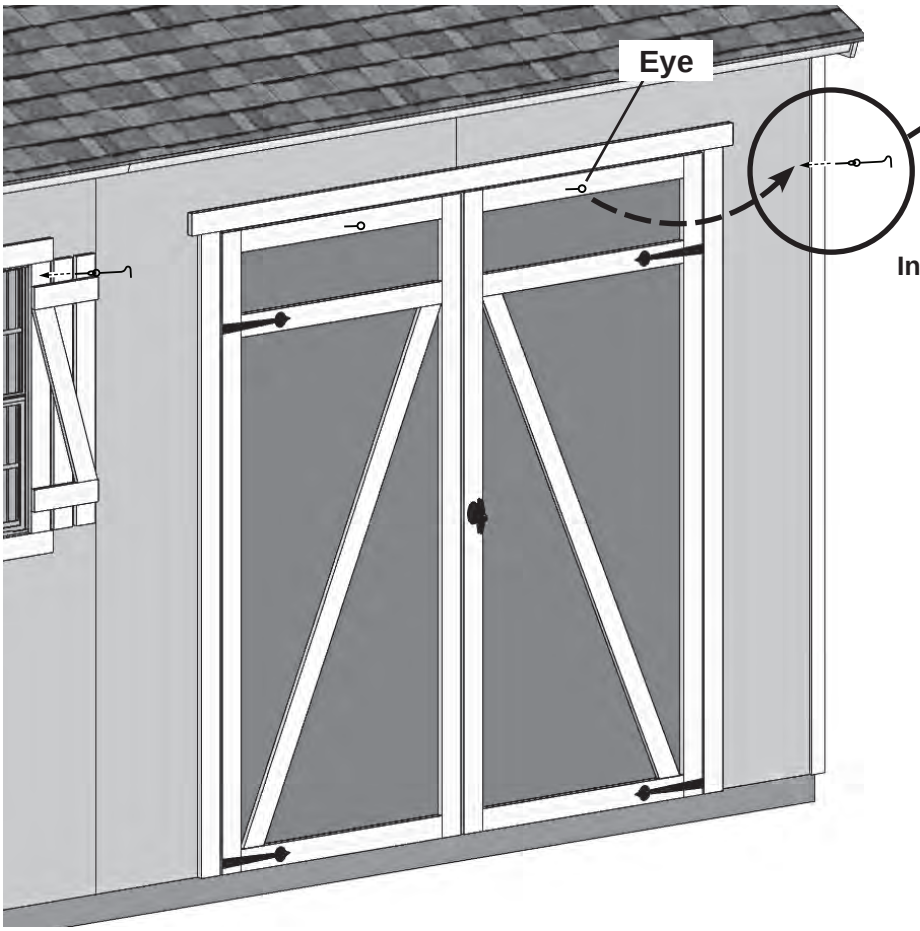

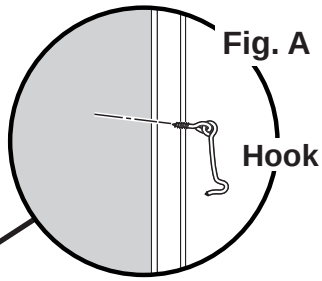

Install hook into framing, if possible.

FINISH

You have installed your hook & eyes.

VENT (Not included in kit.)

• Follow directions provided by manufacturer and these instructions.

x2

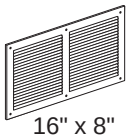

16" x 8"

x12

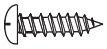

1/2" (13 mm)

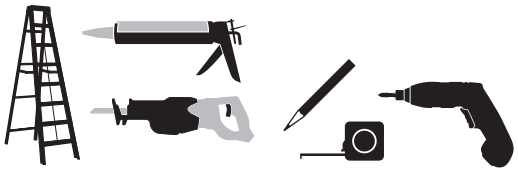

BEGIN

1 Locate and mark for (2) vents in side walls as shown; (1) at top and (1) at bottom.

Cut out marked openings.

Caulk behind vent flanges.

Secure with 1/2" screws.

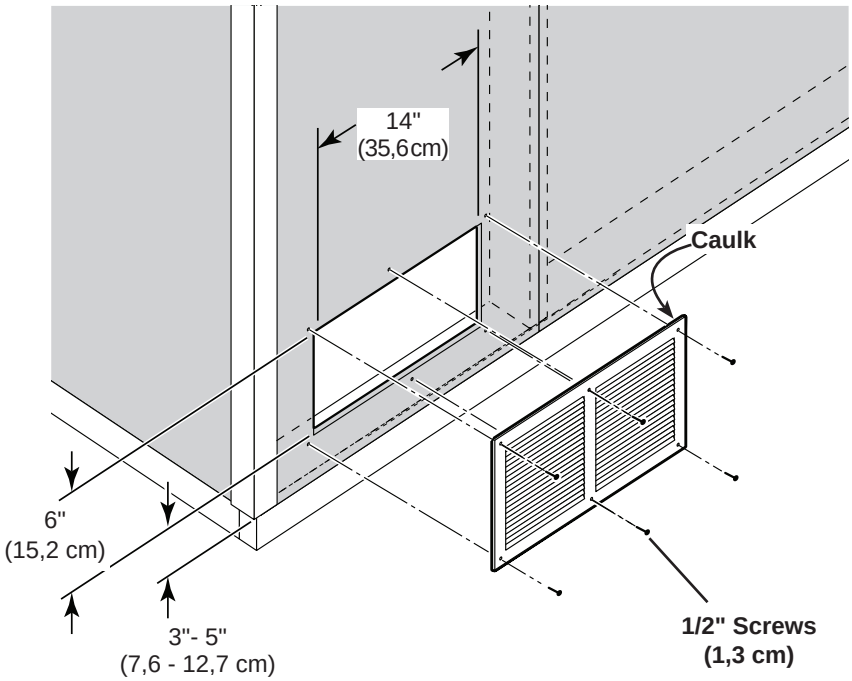

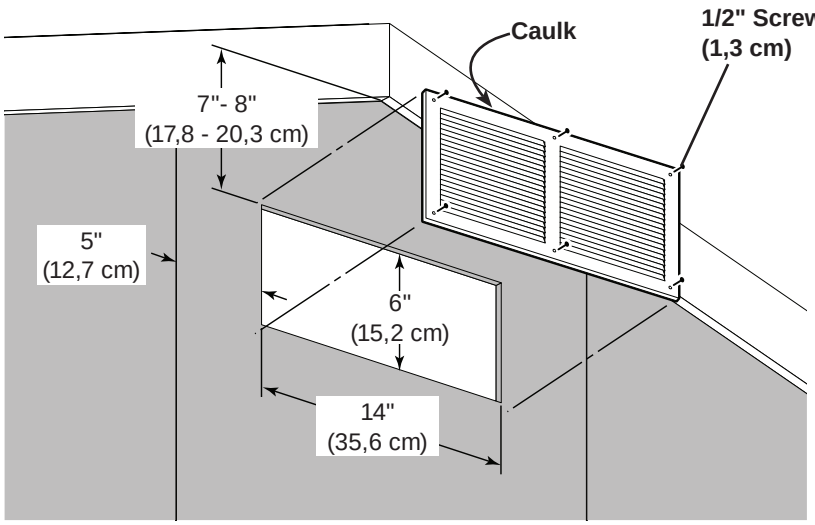

FINISH

Your vents are now installed.

PAINT & CAULK
- NOT INCLUDED -



• Use acrylic latex caulk that is paintable. Caulk at all horizontal and vertical seams, between the trim and walls, and all around the door trim.

• Use a high quality exterior acrylic latex paint. When painting your building, there are a few key areas that can be easily overlooked that must be painted:
  • Bottom edge of all siding and trim
  • Inside of doors and all 4 edges

Note:
Prime all un-primed exterior wood before painting.
(Follow directions provided by manufacturer.)

ROOF FELT
- NOT INCLUDED -

• Install felt flush to all roof edges overlapping 3". Use minimal amount of roofing nails to hold in place.

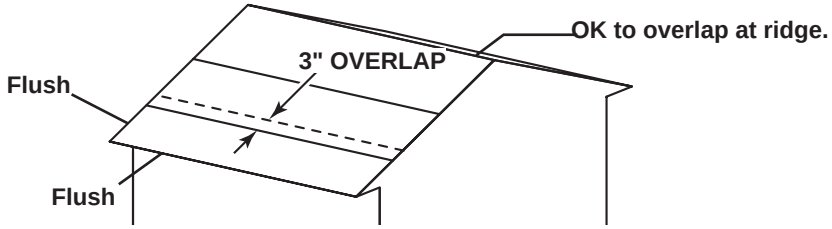

DRIP EDGE
- NOT INCLUDED -



• Install drip edge over roof felt on gable side and under roof felt on eave side (Fig. A).
• Do not use nails on side of drip edge that hangs over side of building.
• Only nail top of drip edge as shown.

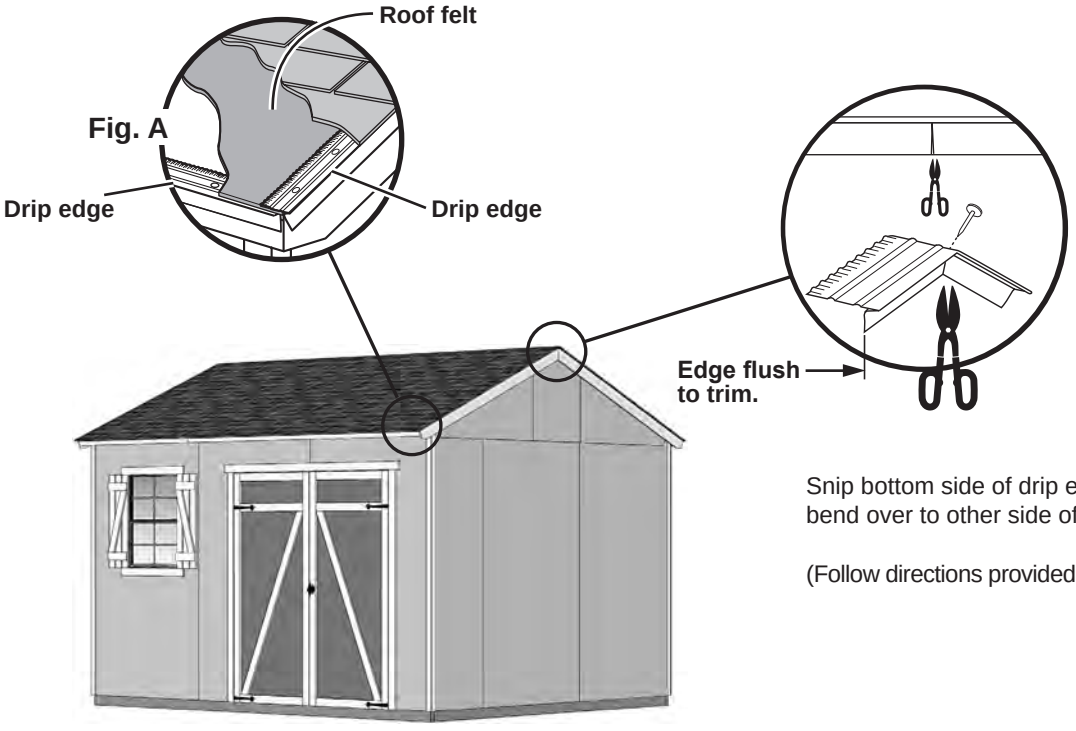

Snip bottom side of drip edge and bend over to other side of roof.

(Follow directions provided by manufacturer.)

SHINGLES
- NOT INCLUDED -

• Follow directions provided by manufacturer and these instructions.

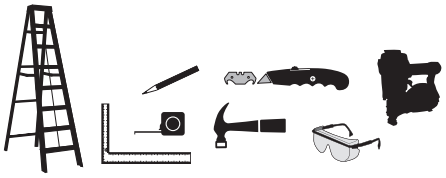

⚠ Familiarize yourself with a 3-Tab Shingle.

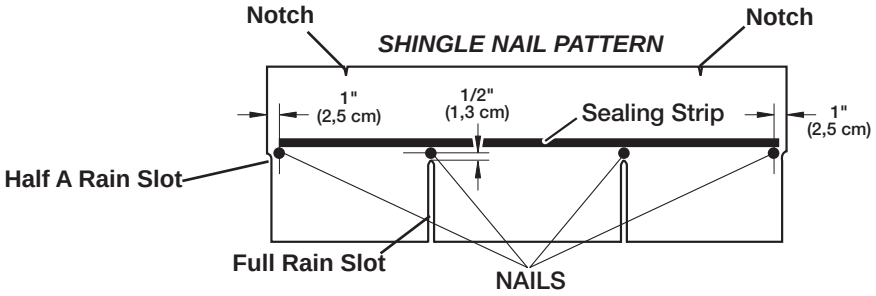

⚠ NEVER DRIVE FASTENERS INTO OR ABOVE SEALING STRIPS.

✓BEGIN

1 Install first starter row upside down and color up with a 1" overhang at back and bottom of roof panel. Use (4) nails per shingle. Starter row must be straight and level all the way across with lower edge of roof deck.
NOTE: If you have installed drip edge install shingles flush to drip edge.

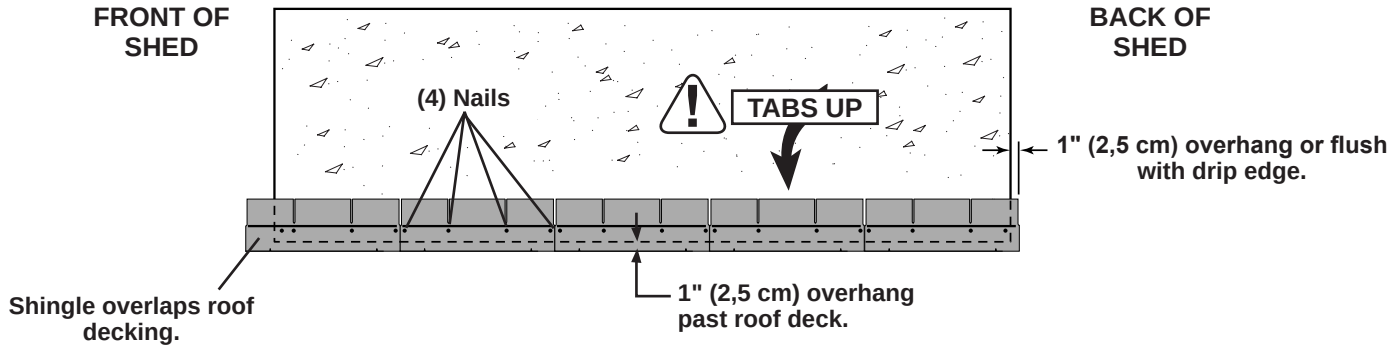

SHINGLES
continued...

2 Beginning at front of shed, install first row of shingles with notch at 1" past roof edge or flush with drip edge.

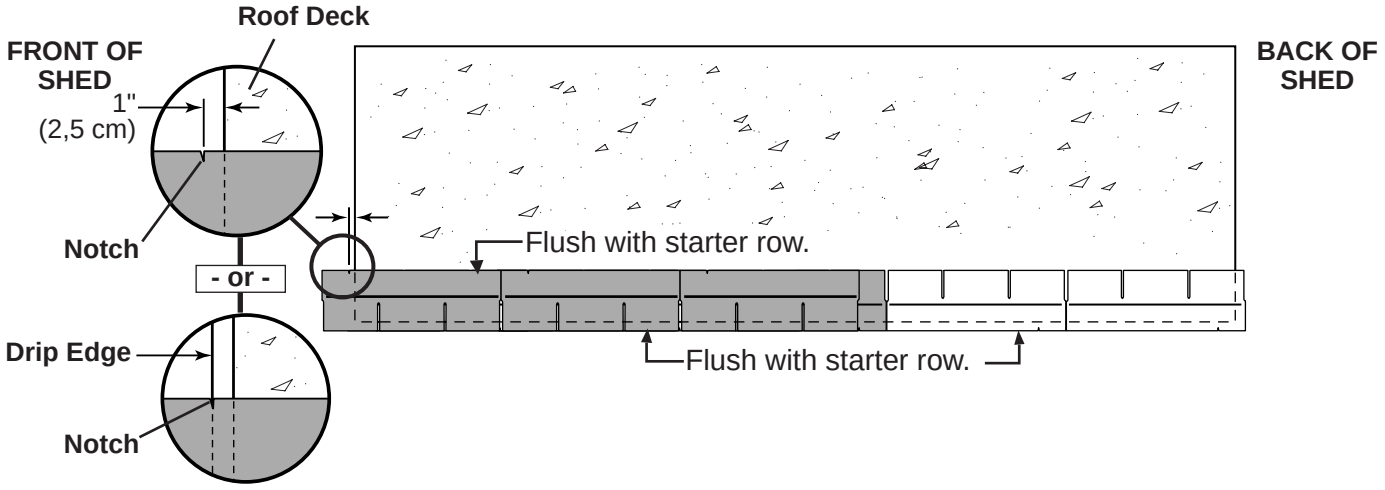

3 Install second row of shingles flush at top of first row's rain slots. Ensure 1" overhang or flush to drip edge at front, stagger each row.

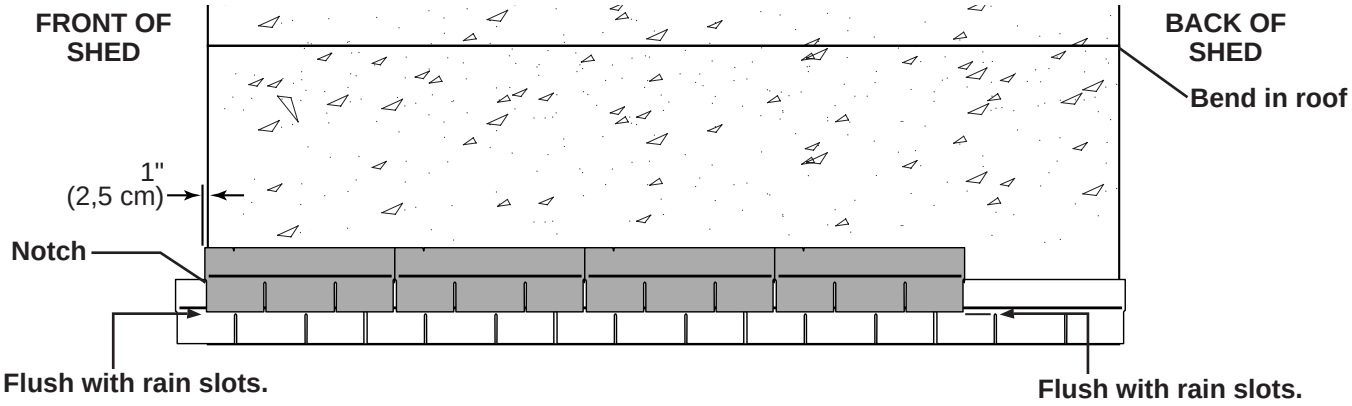

4 Continue installing rows of shingles by staggering at front.

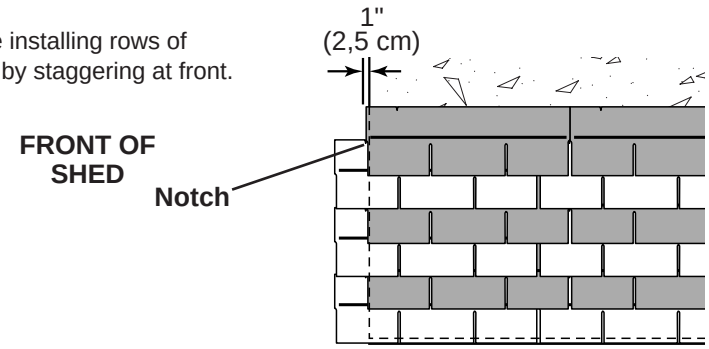

SHINGLES
continued...

5 Continue installing rows of shingles to the peak. At the peak make sure there is a maximum of 5" or less to the rain slot, as shown below. If shingles overlap at ridge cut to peak with a utility knife.

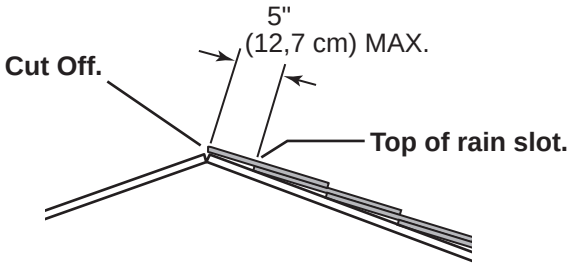

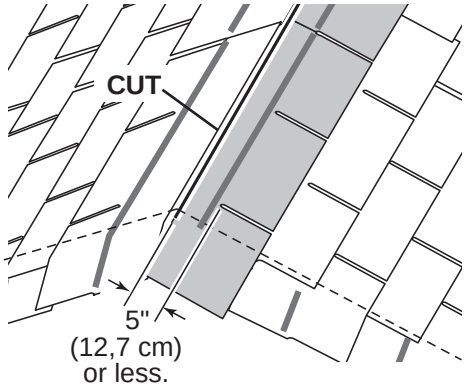

⚠ • If more than 5" to rain slot you must install another row of shingles.

6 Repeat steps 1 - 7 to shingle the opposite side of your roof. Trim shingles at ridge.

7 Once both sides are shingled you need to trim ends. Strike a chalk line 1" from edge.

8 Using your shingle hooked blade carefully cut shingles along chalk line.

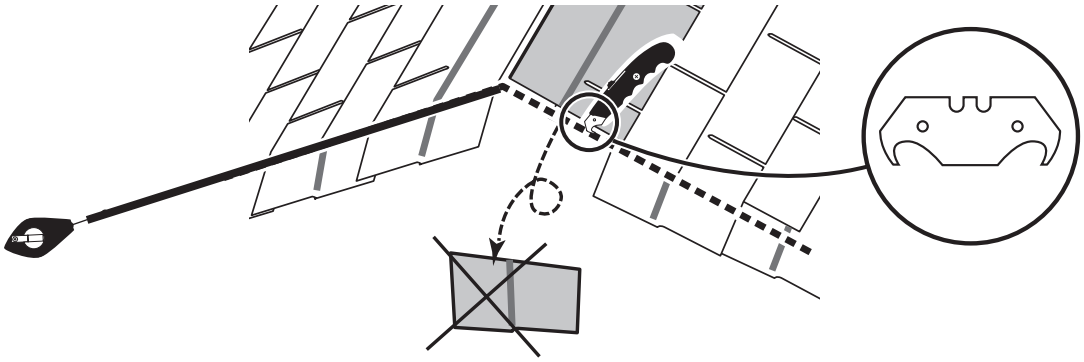

FINISH

You have finished shingling your roof. Proceed to capping the ridge.

SHINGLES - RIDGE CAP

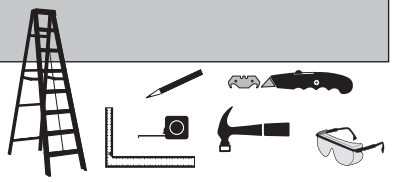

• You will finish off the top of the roof with a ridge cap made from shingles.

BEGIN

1 Cut shingles in THREE pieces. Hint: Use cut-off pieces first.

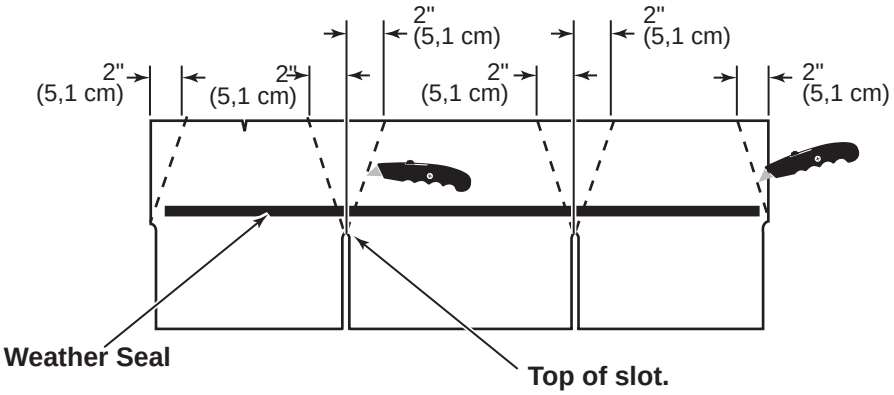

Score shingle, then snap-off angled cut.

10x12'

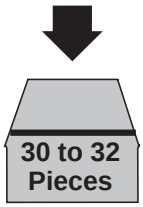

Note: • You will need about 30 - 32 cut pieces for 10' x 12' model

2 Install first ridge cap flush to shingles at front, as shown.

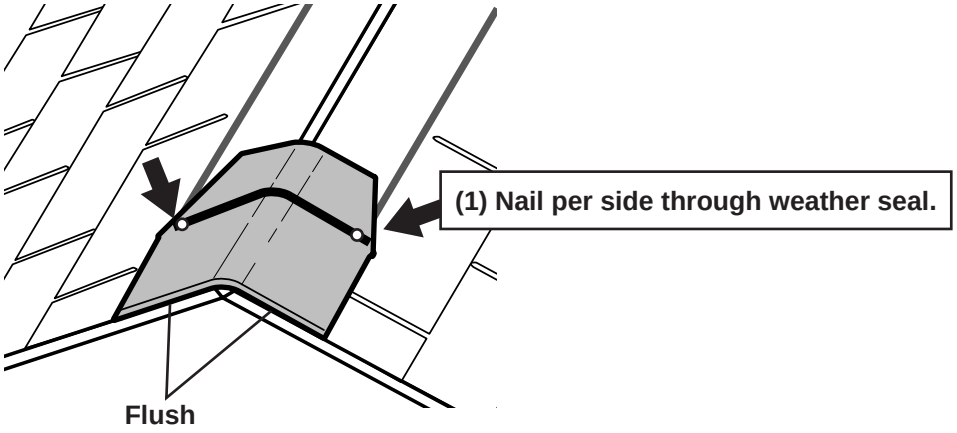

3 Install second ridge cap 5" back, as shown.

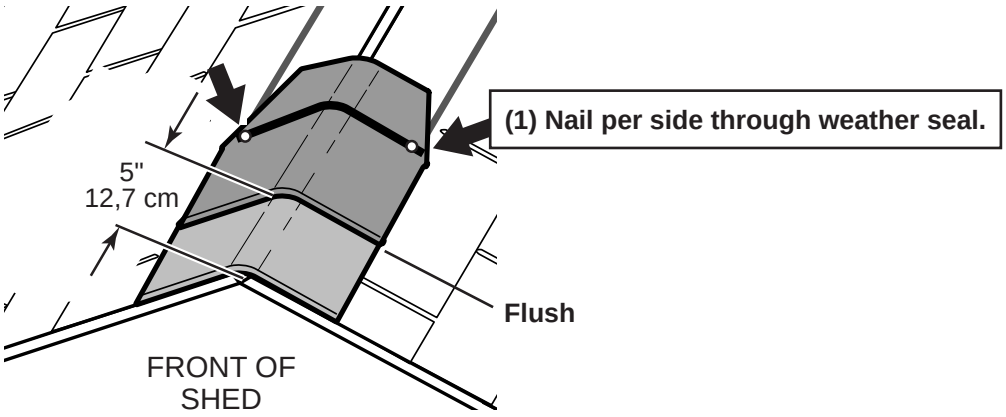

SHINGLES - RIDGE CAP
continued...

4 Continue installing ridge cap to back of roof.

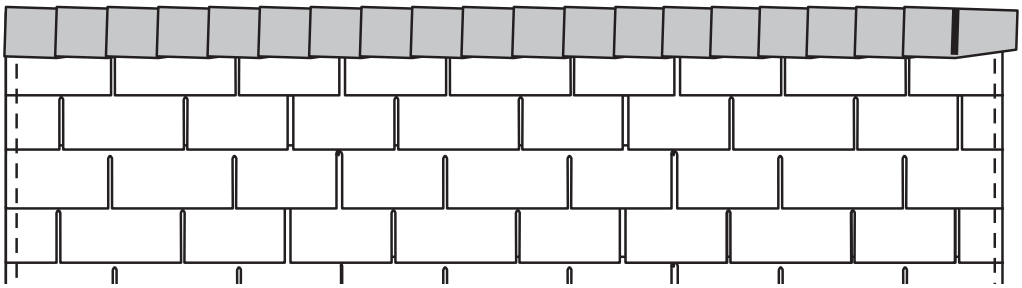

5 Make sure there is 4" between the shingle-color and edge of shingles.

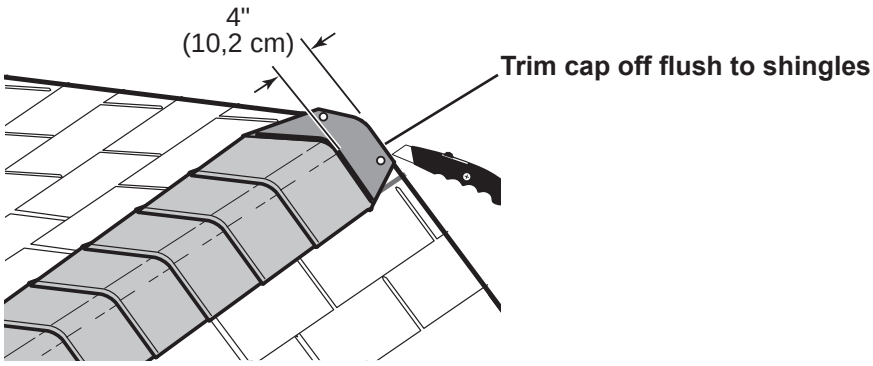

6 When you have 4" minimum of shingle color cut one piece to cap your roof.

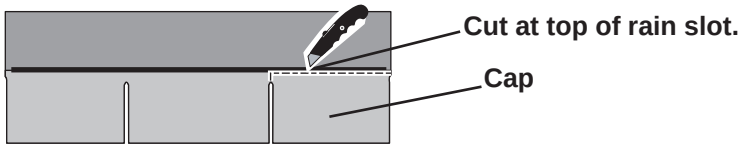

7 Install flush to shingles.

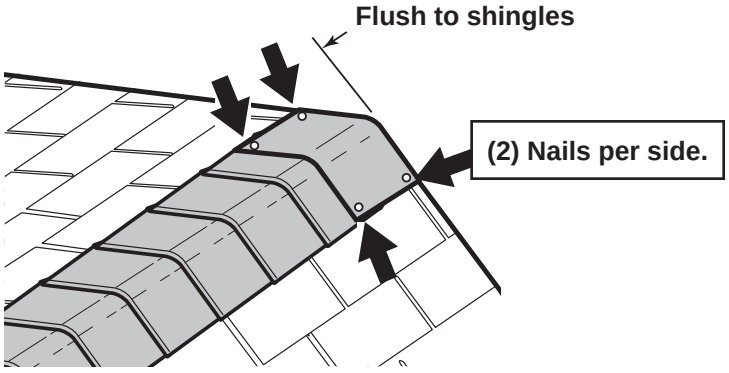

FINISH

You have finished your ridge cap.

16615-NGA 10' x 12' Order Form

CATEGORY	PART DESCRIPTION	PART SIZE	PART ITEM #	BUILDING QTY.	PART ID
2 X 3	Loft Ledger Board "A"	LUM SPF 2X3X96 #2&BTR	12115	1	PT
	Loft Ledger Board "B"	2 X 3 X 23 7/8"	Q 23140000000	1	LW
	Bench Support	2 X 3 X 19" SUPPORT	Q 19000000000	6	LR
	Shelf Support	2 X 3 X 10" SUPPORT	Q 10000000000	6	AC
2 X 4	Collar Ties	*LUM SPF 2X4X72 #2&BTR	O 72000000000	1	TM
	Back Wall Top & Btm "A" / Dblr "A" / Loft	LUM SPF 2X4X96 #2&BTR	12306	10	TP
	Side Wall T & B Plate "A" / Dblr "B"	LUM SPF 2X4X92-5/8 #2&BTR	12305	3	TJ
	Side Wall T & B Plate "B"	2 X 4 X 44 3/8" PLATE	O 44060000000	1	HVC
	Side Wall Top Plate	2 X 4 X 68-1/2"	O 68080000000	4	YFA
	Doubler "C"	2X4X48" DOUBLER/ PLATE/ CRATE	O 48000000000	2	SP
	Doubler "D"	2 X 4 X 20 3/8" DOUBLER	O 20060000000	2	JBD
	Back Wall T & B Plate "B"/ Loft Support	2 X 4 X 24" DOUBLER / PLATE	O 24000000000	8	RL
	Front Wall Bottom Plate "A"	2 X 4 X 60 1/2" PLATE	O 60080000000	1	AV
	Front Wall Bottom Plate "B"	2 X 4 X 12-1/2 " PLATE	O 12080000000	1	AJ
	Window Framing / Loft Support "A"	2 X 4 X 22 1/2"	O 22080000000	4	AO
	Window Bench Top Filler	2 X 4 X 11 5/8" FILLER	O 11100000000	1	BG
	Work Bench Stud	2 X 4 X 34" SHORT STUD	O 34000000000	1	SG
	Wall Studs	2 X 4 X 78 1/2"	O 78080000000	22	AI
	Jack Studs	2 X 4 X 68" STUD	O 68000000000	2	UM
	Over Door Crippler	2 X 4 X 7"	O 07000000000	5	AL
	Header	2 X 4 X 67"	O 67000000000	2	AM
	Rafter	2 X 4 X 65" 22.5* RAFTER	O 65022222000	14	AD
	Front / Rear Gable Connector	2 X 4 X 18 1/8"-22.5* CONNECT	O 18022222000	4	AF
2 X 6	Overhang "A"	LUM WSPF 2X6X96 #1 PREMIUM PET	12416	2	VX
	Overhang "B"	2 X 6 X 49 1/2" OVERHANG	N 49080000000	2	AS
1 X 3 PINE	Gauge Block	1 X 3 X 5" PINE FILLER	U 05000000000	1	GAA
	Shelf Backwall Support "A"	LUM SPF 1X3X96 SQ EDGE PET	14403	2	BE
	Shelf Backwall Support "B"	1 X 3 X 23 7/8" PINE SUPPORT	U 23140000000	2	BC
1 X 4 PINE	Fascia "A"	LUM SPF 1X4X96 SQ EDGE PET	14407	2	KP
	Fascia "B"	1 X 4 X 23 7/8" PINE FASCIA	T 23140000000	1	JS
	Bench Fascia "B"	1 X 4 X 20-1/2" PINE FASCIA	T 20080000000	1	BA
7/16 OSB	Upper Roof Panel "A"	OSB 7/16" x 4' x 8'	11110	2	---
	Upper Roof Panel "B"	7/16" OSB 47 7/8" X 48" ROOF	C 48004714000	2	---
	Lower Roof Panel "A"	7/16" OSB 23 1/2" X 96" ROOF P	C 96002308000	2	---
	Lower Roof Panel "B"	7/16" OSB 23 1/2" X 48" FILLER	C 48002308000	2	---
	Header Filler	7/16" OSB 3 1/4" X 66 3/4" HEADER	C 66120304000	1	---
	Loft Deck "A"	7/16" OSB 36" X 96" LOFT PANEL	C 96003600000	1	---
	Loft Deck "B"	7/16" OSB 15 7/8" X 36"	C 36001514000	1	---
	Bench Top "A"	7/16" OSB 19 1/2" X 92 1/2" BE	C 92081908000	1	---
	Bench Top "B"	7/16" OSB 19 1/2" X 23 7/8"	C 23141908000	1	---
	Bench Bracket	EZ 8" 14 1/4" X 22 1/4" BENCH	J 220414040PP	5	---
	Shelf Top "A"	7/16" OSB 11 1/2" X 96" ROOF	C 96001108000	1	---
	Shelf Top "B"	7/16" OSB 11 1/2" X 23 7/8"	C 23141108000	1	---
1/4 PEGBOARD	Peg Board "A"	1/4" x 23-7/8" x 96"	A 96002314000	1	---
	Peg Board "B"	1/4" x 23-7/8" x 23-7/8"	A 23142314000	1	---
GUSSETS	Gusset	EZ8"/OSB 6" X 24" GUSSET 22.5*	J 24000600225	12	---
NO GROOVE SIDING	Center Gable Panel	3/8" NG 23 7/8" X 23 9/16"	K 23092314000	2	---
	Front / Rear Gable Panel - Right	3/8" NG 23 9/16" X 48" RIGHT FRONT GABLE	K 48002309100	2	---
	Front / Rear Gable Panel - Left	3/8" NG 23 9/16" X 48" LEFT FRONT GABLE	K 48002309200	2	---
	Corner Trim	3/8" NG 1 3/4" X 83-1/2"	K 83080112000	8	---
	Rearwall Panel "A" / Side Panel	SIDING NGSE 3/8X4'X7'	11507	7	---
	Rear Panel "B"	NG 23 7/8" X 84" WALL PANEL	K 84002314000	2	---
	12' wide Frontwall Panels w/ Window	NG 48" x 84" (GENTRY) WINDOW	K 84004800600	1	---
	Frontwall Panel Right	NG 48" x 84" RIGHT FRONTWALL	K 84004800101	1	---
	Frontwall Panel Left	NG 48" x 84" LEFT FRONTWALL	K 84004800201	1	---
19/32 X 3 SMART TRIM	Vertical / Over Door Trim	19/32 TST 2 1/2" X 72" TRIM	UT72000208000	1	ZJ
	Long Cross Buck - Right	19/32 TST 2 1/2" X 62" 22.5*	UT62000208221	1	AHR
	Long Cross Buck - Left	19/32 TST 2 1/2" X 62" 22.5*	UT62000208222	1	AHL
	Horizontal Window Trim	19/32 TST 2 1/2" X 28 1/8"	UT28020208000	2	DT
	Vertical Shutter Trim	19/32 TST 2 1/2" X 30 1/8"	UT30020208000	6	AZ
	Horizontal Shutter Connector	19/32 TST 2 1/2" X 8 1/2"	UT08080208000	4	DF
	Angled Shutter Trim - Right	19/32 TST 2 1/2" X 21"	UT21000208161	1	BWR
	Angled Shutter Trim - Left	19/32 TST 2 1/2" X 21"	UT21000208162	1	BWL
	Horizontal Door Rail	19/32 TST 2 1/2" X 26 5/8"	UT26100208000	2	AH
19/32 X 4 SMART TRIM	Gable Trim Right	19/32 TST 3 1/2" X 71 15/16" 22.5* O/E RGT TRIM	UT71150308221	2	AUR
	Gable Trim Left	19/32 TST 3 1/2" X 71 15/16" 22.5* O/E LFT TRIM	UT71150308222	2	AUL
PURCHASED COMPONENTS	Door Stiffener	LSL 1-1/4 X 2-1/4 X 69 PET	12715	2	OO
	Large Square Window	WINDOW 22 1/4" X 29 3/4" LG SQ	15281	1	---
	Black T-Handle	HANDLE - T 5-1/2" SHAFT & "D"	15375	1	---
	Fuax Hinges (4pk)	HINGE (FAUX) w/ SCREWS (4 HING	15246	1	---
	Hardware Kit	H/K CLASSIC GENTRY PROD IMPROV	15878	1	---
	Threshold	THRESHOLD 7/8" X 1-1/2" X 63-7/8	15420	1	---
PACKAGING	Instructions		16615-NGA	1	---
	30222-RNG				
Right Door Assembly	Door Panel	NG 31 1/4" X 71 3/8" DOOR	K 7106310400C	1	---
	Right Hinge Assembly	HINGE RIGHT (RED) 19/32x3 THIN TRIM	30121-TT	1	---
	Vertical Door Stiles	19/32 TST 2 1/2" X 71 5/8"	UT71100208000	2	GY
	Horizontal Door Rails	19/32 TST 2 1/2" X 26 5/8"	UT26100208000	2	AH
	30222-LNG				
Left Door Assembly	Door Panel	NG 31 1/4" X 71 3/8" DOOR	K 7106310400C	1	---
	Left Hinge Assembly	HINGE LEFT (GREEN) 19/32x3 THIN TRIM	30131-TT	1	---
	Vertical Door Stiles	19/32 TST 2 1/2" X 71 5/8"	UT71100208000	2	GY
	Horizontal Door Rails	19/32 TST 2 1/2" X 26 5/8"	UT26100208000	2	AH

LIMITED CONDITIONAL WARRANTY*

Backyard Storage Solutions, LLC warrants the following:

1. Every product is warranted from defects in workmanship and manufacturing for 1 year.
2. All accessories, hardware and metal components are warranted for 2 years.
3. All Oriented Strand Board (OSB) is warranted for 2 years
4. Siding and Trim is warranted for 10 years.
5. Solar Shed windows are warranted for 1 year.
6. Cedar lumber is warranted for 15 years.
7. Preserved Pine is warranted for 10 years.
8. Redwood is warranted for 10 years.

Backyard Storage Solutions, LLC will repair, replace or pay for the affected part. In no event shall Backyard Storage Solutions, LLC pay the cost of labor or installation or any other costs related thereto. All warranties are from date of purchase. If a cash refund is paid on an affected part, it will be prorated from the date of purchase.

CONDITIONS

The warranty is effective only when:

1. The unit has been erected in accordance with the assembly instructions.
2. The unit has been properly shingled and painted or stained and reasonably and regularly maintained thereafter.
3. The failure occurs when the unit is owned by the original purchaser.
4. Backyard Storage Solutions, LLC has received the warranty registration card within thirty (30) days of purchase and notification of the failure in writing within the warranty period specified above.
5. Backyard Storage Solutions, LLC has had reasonable opportunity during the sixty (60) days following receipt of notification to inspect and verify the failure prior to commencement of any repair work.

REQUIREMENTS

Storage Buildings

To validate your warranty, it is necessary to properly maintain your Backyard Storage Solutions, LLC unit; shingle the roof and paint or solid-colored stain the siding using quality, 100% acrylic latex exterior product with a minimum of two (2) coats within thirty (30) days of assembly; caulk above all doors and all horizontal and vertical trim boards; paint and seal all exposed edges, sides and faces of siding/trim and OSB siding to include all exterior walls and all sides and all edges of doors.

Gazebos & Pergolas

To validate your warranty, it is necessary to properly maintain your Backyard Storage Solutions, LLC unit. This includes treating all of the exposed cedar and pine surfaces on your gazebo or pergola structure with an exterior grade wood preservative, an exterior oil-based semi-transparent stain, an acrylic latex exterior paint or an acrylic latex solid color exterior stain within 30 days of assembly and as needed thereafter to maintain your warranty.

Keep vegetation trimmed away from building and make sure siding panels and trim do not come in contact with masonry or cement. The minimum ground clearance for siding must be one half inch (½ inch) from concrete slab or two and one half inches (2 ½") from the ground when building is erected or constructed on a treated wood floor kit. Water from sprinklers must be kept off unit. In no event will Backyard Storage Solutions, LLC be responsible for any indirect, incidental, consequential or special damages nor for failure(s) that are caused by events, acts or omissions beyond our control including, but not limited to, misuse or improper assembly, improper maintenance (which eventually leads to rot or decay) and acts of God. Backyard Storage Solutions, LLC will not be held responsible for any labor costs incurred to construct your unit.

This warranty gives you certain specific rights that vary from state to state.

CLAIM PROCEDURE

To make a claim under this warranty, you can either call 1-888-827-9056 or email: customerservice@backyardproducts.com.

Please have ready the information below when you call or include the information in your email:

1. The model and size of the product.
2. A list of the part(s) for which the claim is made.
3. Proof of purchase of the Backyard Storage Solutions, LLC item, as shown on the original invoice or receipt.
4. Run code: found on exterior product label or assembly instructions enclosed in the product package.

All other inquiries can be mailed to:

Backyard Storage Solutions, LLC
Attn: Customer Service
1000 Ternes
Monroe, MI 48162

***WARRANTY TERMS MAY VARY OUTSIDE THE U.S.A.**

IMPORTANT: This is your warranty certificate.