Everyday Bar Deck Mount Faucet and Lever Handles Chrome
Model(s) LK2477CR

PRODUCT SPECIFICATIONS

Everyday Bar Deck Mount Faucet and Lever Handles Chrome. Faucet has a flow rate of 1.5 GPM, and is made of Brass material, with a Ceramic Disc valve. Faucet requires 2 faucet holes.

Mounting Type:	Deck Mount
Special Features:	Solid Brass Construction
Finish:	Chrome (CR)
Handle Type:	Lever Handle
Deck Clearance:	9"
Spout Reach:	3-9/16"
Spout Height:	11-11/16"
Hole Drillings:	2
Material:	Brass
Valve Type:	Ceramic Disc
Valve Connection:	3/8" Female Compression Hose Assembly
Flow Rate:	1.5 GPM
Faucet Hole Size (min):	1-3/8"
Countertop Thickness:	1-1/2
Spout Swing Rotation:	360°
Spout Type:	Standard Spout



Chrome (CR)



A Century of Tradition and Quality.
For more than 100 years, Elkay has been making innovative products and providing exceptional customer care. We take pride in offering plumbing products that make life easier, inspire change and leave the world a better place.

Product Compliance: ADA & ICC A117.1
ASME A112.18.1/CSA B125.1
NSF 372 (lead free)
NSF 61 (Q≤1)

Complies with ADA & ICC A117.1 accessibility requirements when installed according to the requirements outlined in these standards.

Clean and Care Manual (PDF)
Installation Instructions (PDF) - LK2477 - Install sheet
Warranty (PDF)

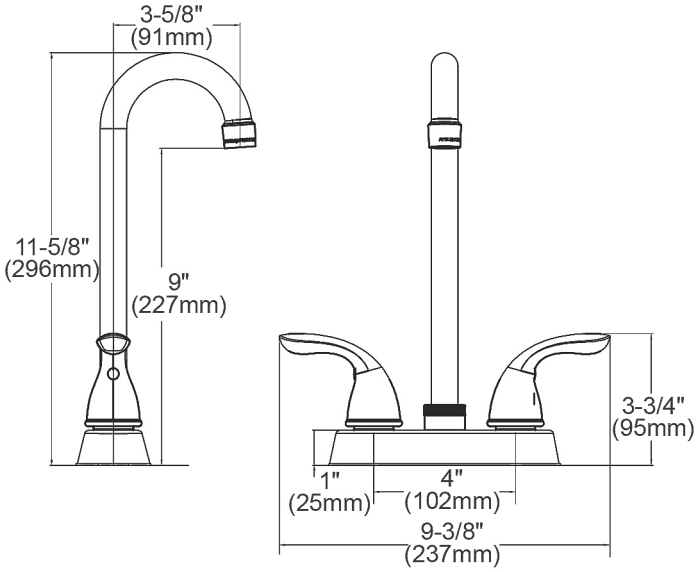

PART:_____QTY: _____
PROJECT:_____
CONTACT:_____
DATE:_____
NOTES:_____
APPROVAL:

In keeping with our policy of continuing product improvement, Elkay reserves the right to change product specifications without notice. Please visit elkay.com for the most current version of Elkay product specification sheets. This specification describes an Elkay product with design, quality, and functional benefits to the user. When making a comparison of other producers' offerings, be certain these features are not overlooked.

Optional Accessories		
LK115	Faucet Extension Kit Spec Sheet (PDF)	

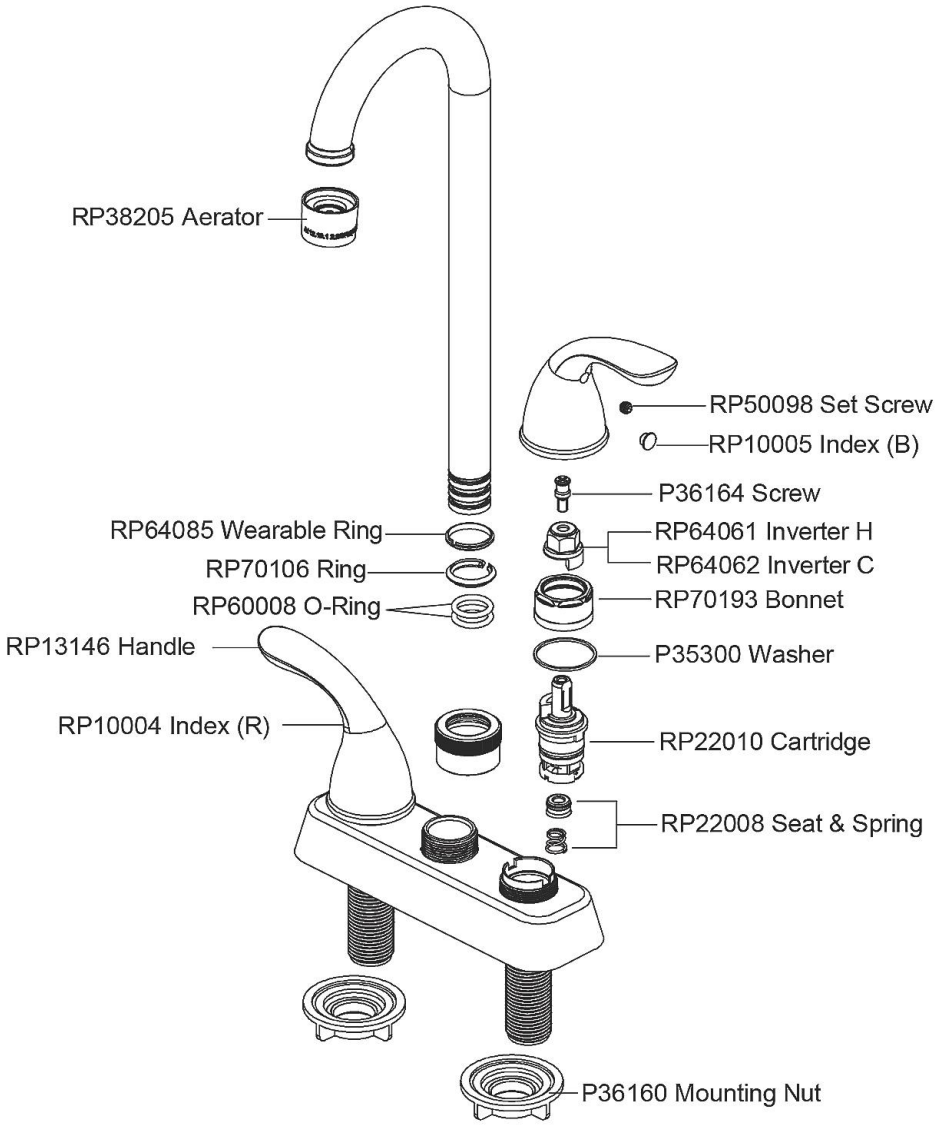

In keeping with our policy of continuing product improvement, Elkay reserves the right to change product specifications without notice. Please visit elkay.com for the most current version of Elkay product specification sheets. This specification describes an Elkay product with design, quality, and functional benefits to the user. When making a comparison of other producers' offerings, be certain these features are not overlooked.