ITEM NO.: MCBF1660/1660R

LED MEDICINE CABINET
BEVEL DESIGN

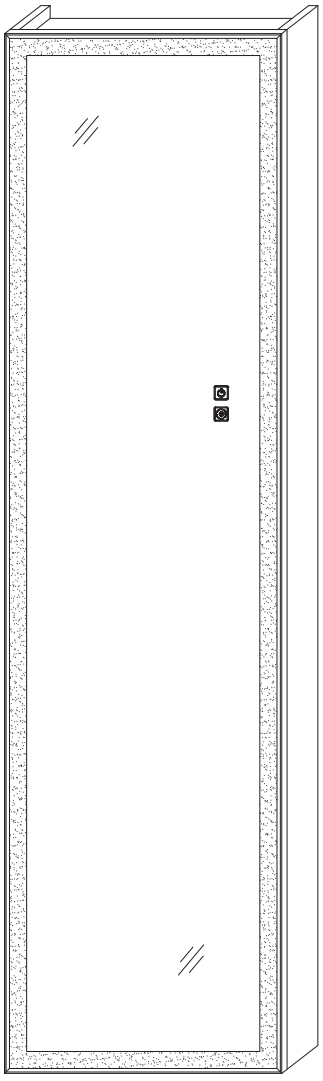

MCBF-US V1.3-2521

INSTALLATION INSTRUCTION

Please read this instruction carefully before the installation and keep it for the future use and the warranty.

BRAND SUPPORT

Thank you for choosing us !
We are a brand that specializes in producing mirrors professionally.
Your suggestions are important to us. We would greatly appreciate it if you could share your ideas with us so that we can improve our products and better satisfy our customers.

⚠ Manufacturer warranty for 2 years from date of purchase.

General Guidelines

1. Please carefully read the following instructions and use the product accordingly.
2. Keep this manual and pass it on when transferring the product.
3. This summary may not include every detail of all variations and considered steps.

If you need further information or assistance, please feel free to contact us at our official email address:

✉ *homefixassist@outlook.com*

Warnings

1. Children are not allowed to assemble the product. During assembly, please ensure that small parts are kept out of the reach of children, as they may pose a choking hazard if swallowed or inhaled.
2. Keep plastic packing bags out of reach of children to prevent suffocation or other potential dangers.
3. Avoid using sharp objects or corrosive chemicals on the product, as they can cause damage to both the product and the user.

Use Tips

1.Please use in safe voltage range. (100V-120V)
2.Do not strike the mirror with hard or pointed items.
3.WARNING: The installation must be performed by a qualified licensed electrician.

⚠ DANGER: Before installation, make sure the main power is cut off.

PRE-ASSEMBLY

1. Important Safety Instructions:

- Please read all instructions carefully before assembling the item.
- Assembly by two or more adults is highly recommended.
- To connect the wires to electrical junction box, a qualified technician or electrician is highly recommended.
- Before installation, component addition or replacement, please make sure the main power has already cut off.
- Ensure the assembly location(solid stone / brick walls) can bear the weight of the complete fitting.
- To prevent injury, the mirror must be installed according to this instruction.

2. Pre-assembly:

- After opening the package, please inspect the accessories according to the packing list in order to ensure the received accessories are complete.
- Ensure the assembled voltage is between 100V and 120V. If the voltage exceeds 120V, please use a transformer.
- You can connect the wires directly to your junction box or a plug.
- Before assemble the mirror on wall, please try to plug and power the product at first, to make sure that the lighting effects and the functions mentioned in section 3 work. If so, you can start to install.

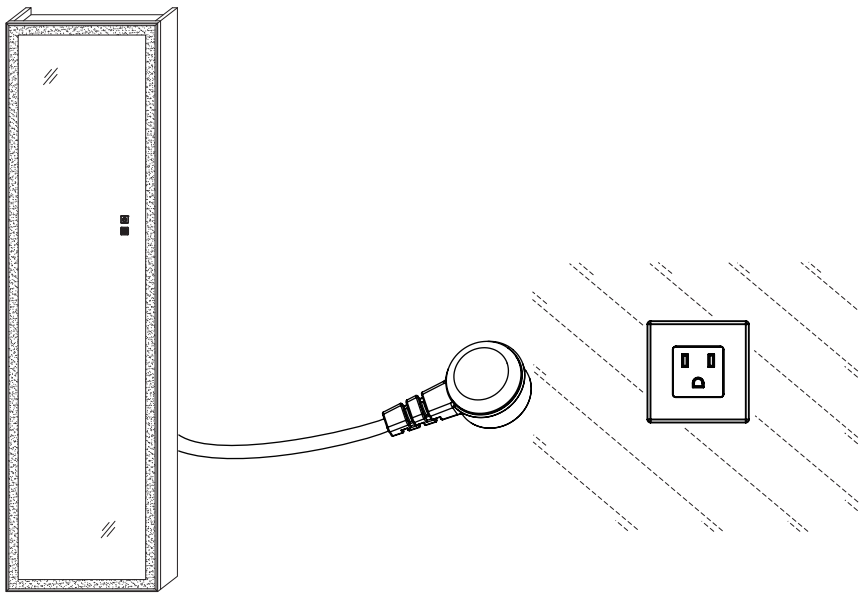

BUTTONS FUNCTION EXPLANATION

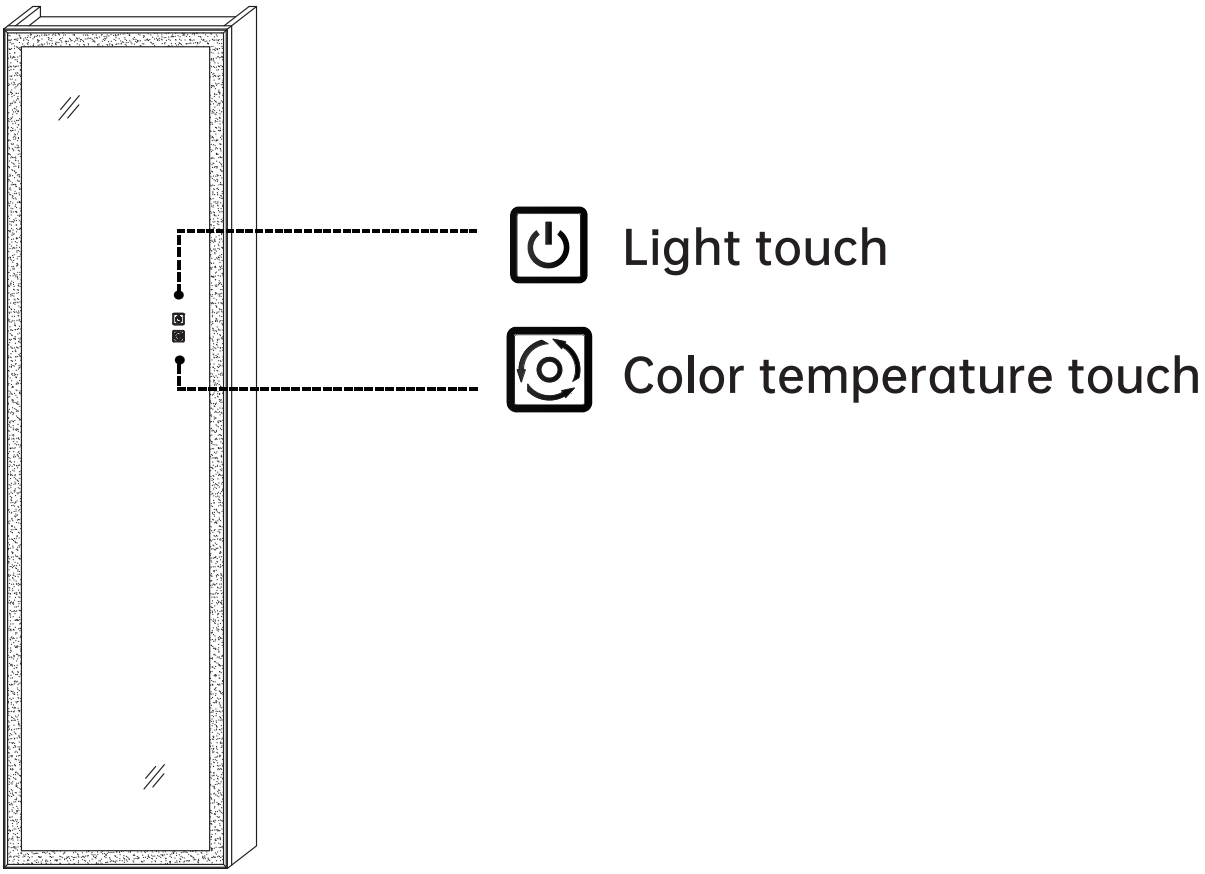

① Top button: Light Brightness adjustment.

Press and hold the button to make the brightness stepless adjustment(100% to 20%).
Memory function: The light brightness will keep the last choice, hardwire Installation(wall switches)also work.

② Under button: Color temperature adjustment.

There are 3 C.T. to select, make a short press to switch them.
White light(6000K) - Natural light(4000K) - Yellow light(3000K).
Press and hold the touch to make the color temperature stepless adjustment(6000K to 3000K).
Memory function: The color temperature will keep the last choice.

③Induction Led Strip.

The top light bar will automatically on and off as the door open and close.

ATTENTION

Not Offering

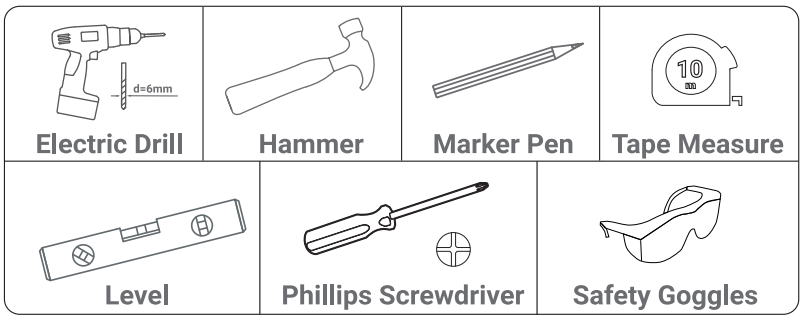

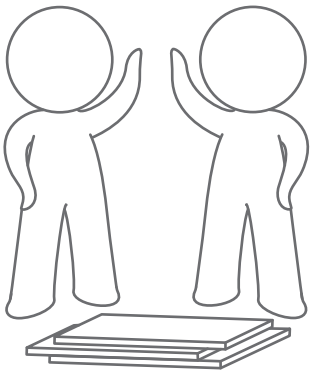

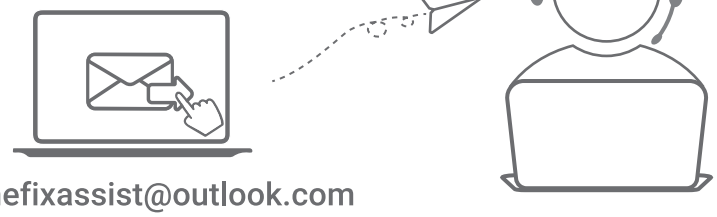

homefixassist@outlook.com

KEEP DRY

NO SUN EXPOSURE

SOFT DRY CLOTH

PARTS LIST-ARCHED

 Medicine Cabinet x 1	 Bracket x 1	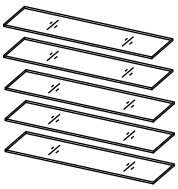 Glass shelf x 5	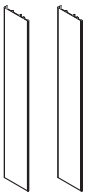 Side Panel x 2	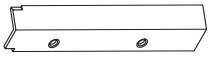 Side Panel Cover x 4
 Lower Bracket x 1	 Shelf Clip x 4	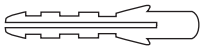 1/4" (φ6*40mm) A x (3+1+1)	 5/32" (φ4*40mm) B x (3+1+1)	 (φ4*8mm) C x (8+2)

*We offer additional 1 screws to prevent screw missing in case.

*Each piece of tempered glass requires 4 shelf clips, which we have installed inside the cabinet, while we provide 4 extra shelf clips as accessories.

BEFORE INSTALLATION

- For safety and ease of mounting, installation is recommended using two people.
- Please confirm the installation position and installation height of the hang bracket supplied, and use a spirit level to make sure the bracket be leveled. Then mark the hole positions on the wall.

METHOD 1: FOR HANGING WALLS

Method 1.1 : For Solid or Concrete Walls.

（Please refer to step 1 to step 5、9、10, P8-P11, P14.）

METHOD 2: FOR RECESSED

（Please refer to step 6 to step 10, P12-P14.）

*The spacing between each two holes is 4 in (100mm).

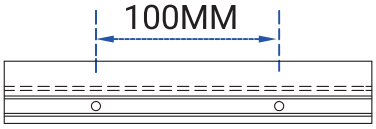

ILLUSTRATIVE GRAPH

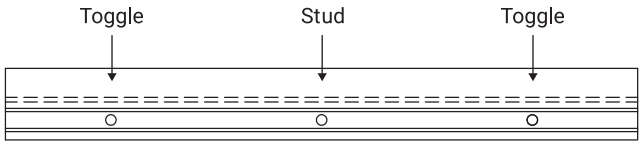

"Centered Installation"

MCBF1660/1660R

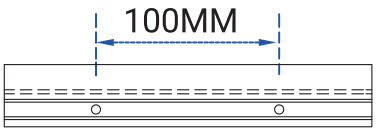

*The spacing between each two holes is 4 in (100mm).

- If walls are stud or dry Wall, or use toggle anchor please consult a licensed contractor and your local hardware store for assistance.
- Using the electronic stud finder and mark stud locations using the pencil.
(Note: It is best to mount the bracket to at least (1) stud, using the illustrative graph shown below for reference. Wood studs are typically located every 16", on center.)

Cabinet Door Installation

*Taking MCBL3630 as an example.

1.Insert the hinges to the base ,then connect the doors with the cabinet.

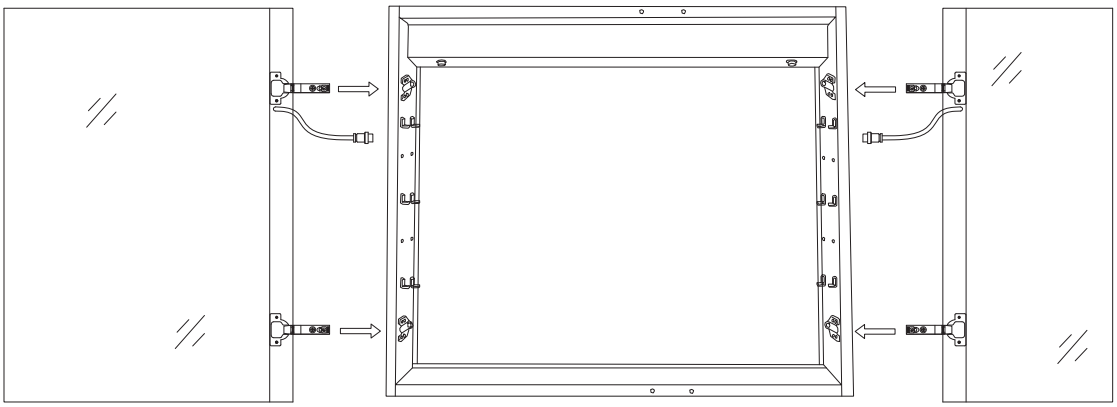

2.If necessary, adjust corresponding screws on the hinge to align the doors, ensure that gaps are even and the doors open and close smoothly.

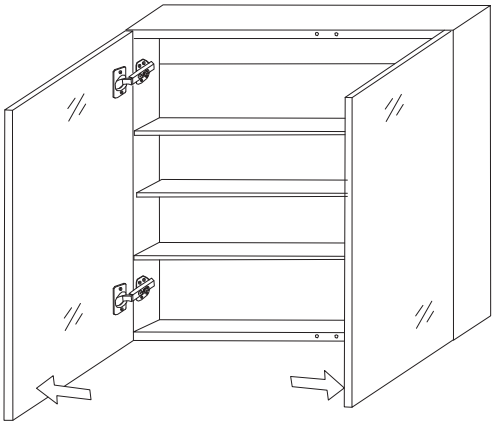

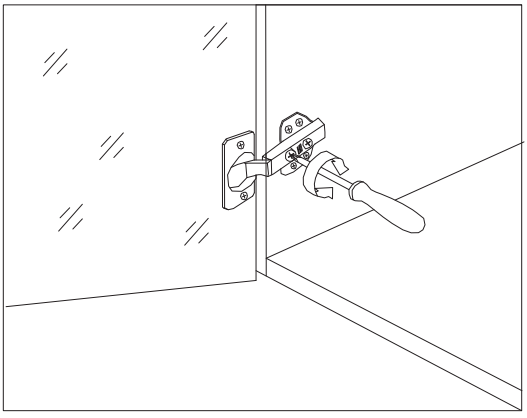

METHOD 1: FOR HANGING WALLS

Method 1.1 : For Solid or Concrete Walls.

1 ⚠ **ATTENTION**

- The distance between the bottom of bracket to the top of the mirror is $2^{1/8"}$ inch(55mm).
- The recommended installation safety distance is 8 inch(at least) from the ground.The exact mounting height should be determined by your height, with the field of view flush with the center of the mirror.

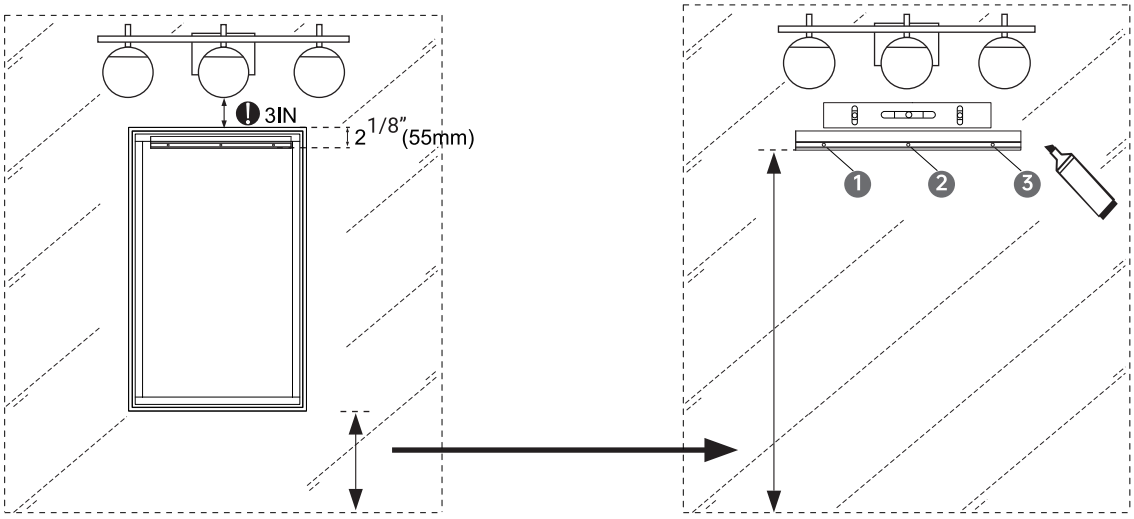

2

Use a 1/4" (6mm) drill to drill holes at the marked points to a depth of 13/4" (45mm), then apply the wall anchors with a hammer. Mount the lower bracket to the wall with screws.

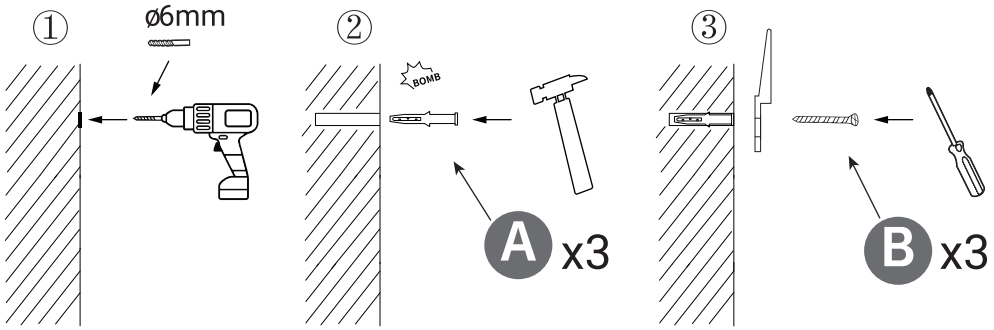

⚠ Note: Please wear goggles and pay attention on your safety.

A		3 PCS
B		3 PCS

3

Lift the medicine cabinet and place it securely in the upper bracket. Holding the cabinet in an upright position, secure the lower bracket in the grooves on the bottom of the cabinet.

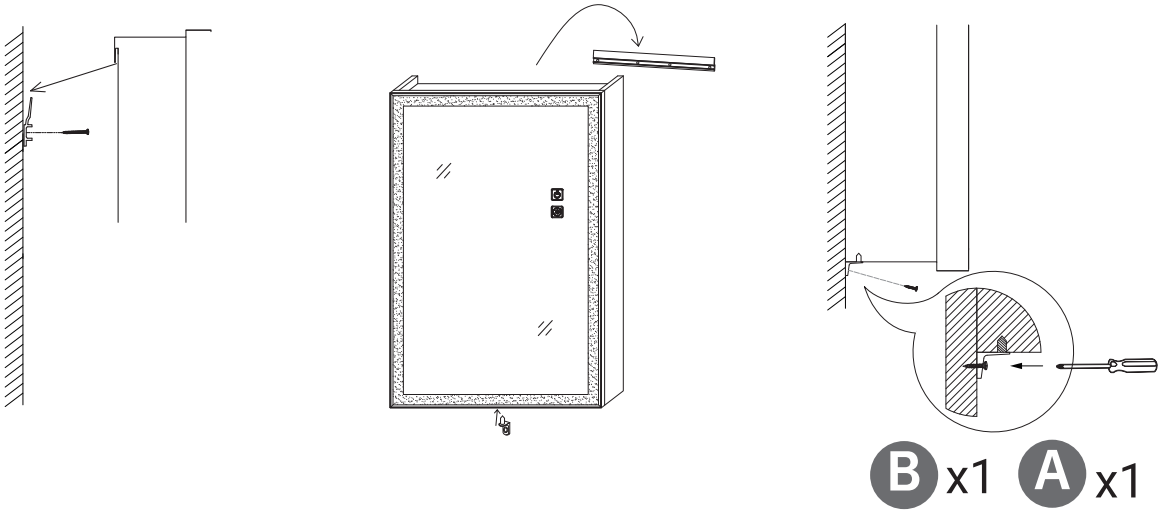

Note: Gently shake the mirror to ensure that the mirror is securely installed.

A 1 PCS

B 1 PCS

4

Install side Panels

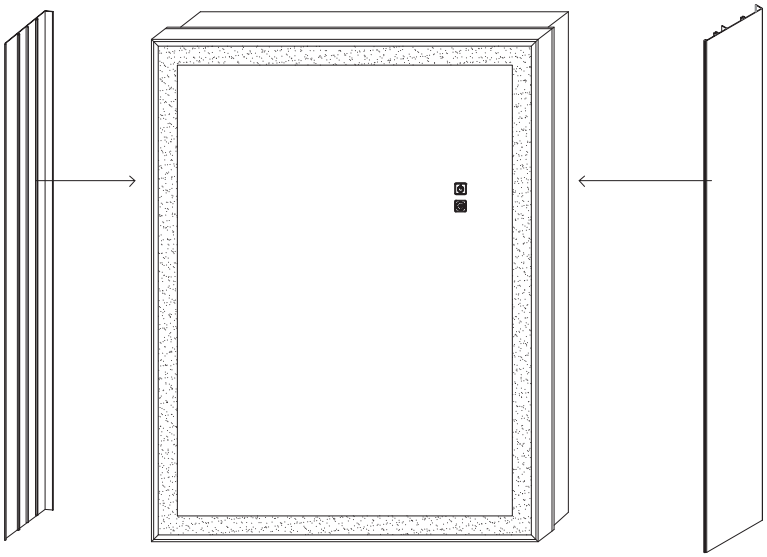

Note: No need to install side panels if recessed.

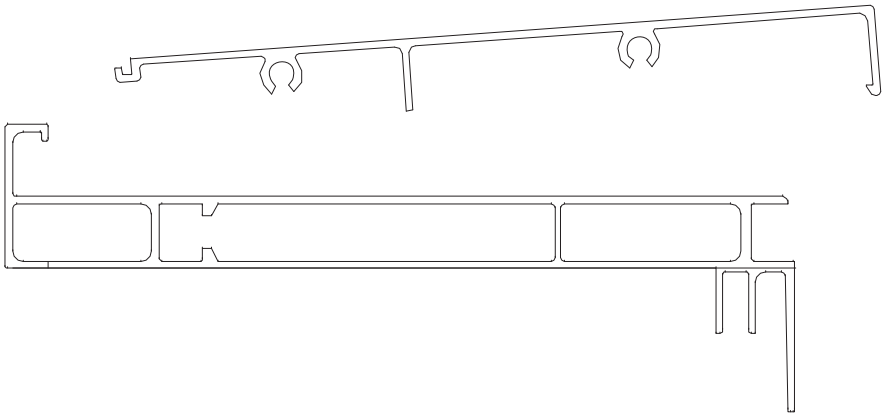

Align the slots inside of
the board and cabinet.

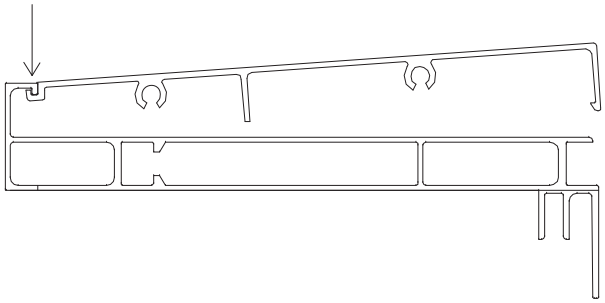

Press down the board until
they are clamped together.

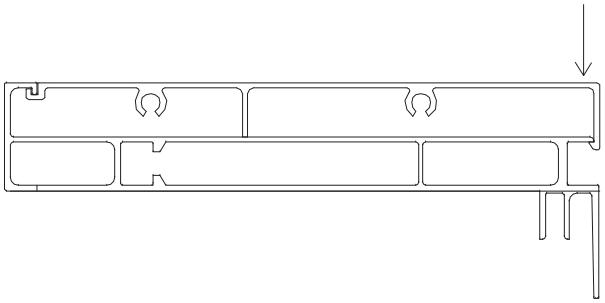

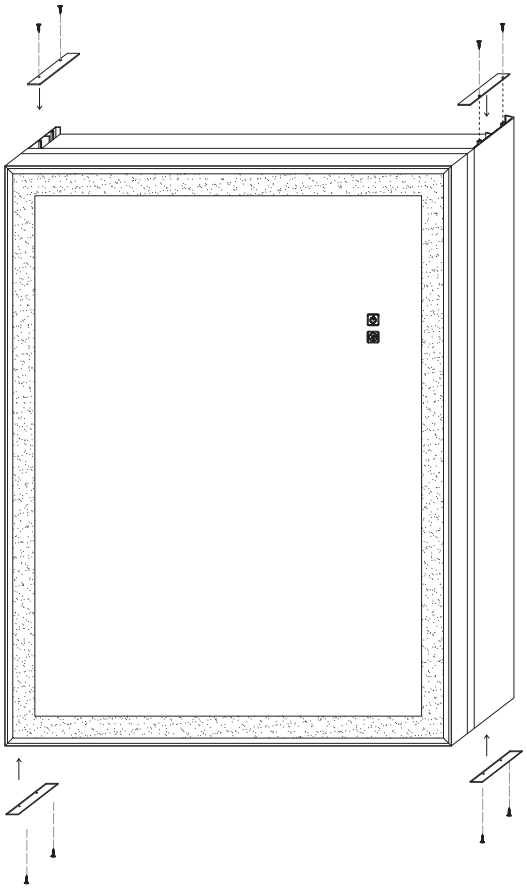

C  8 PCS

5

Plug the mirror. You can use the plug directly or connect the wire to a standard switch lighting circuit.

●Use the plug

After hanging the mirror, plug it directly.

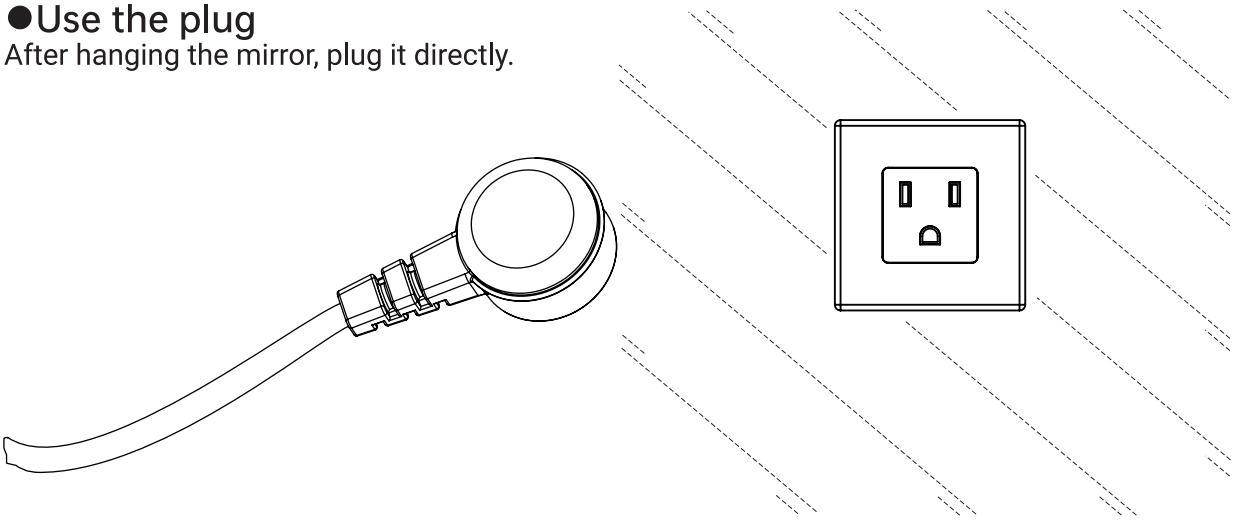

●Hardwire Installation

Cut the plug and connect the mirror's wire to the power by the wire connectors.

⚠ DANGER: Before installation, make sure the main power is cut off.

BLACK WIRE --- POWER SUPPLY L (LIVE)
WHITE WIRE --- POWER SUPPLY N (NEUTRAL)
GREEN WIRE --- POWER SUPPLY E (EARTH)

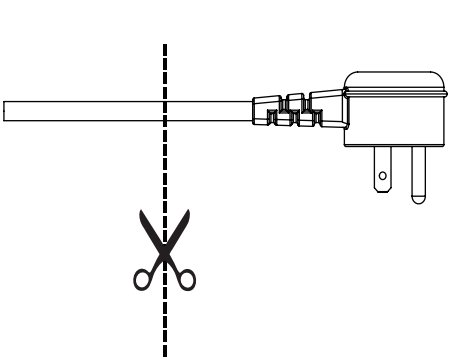

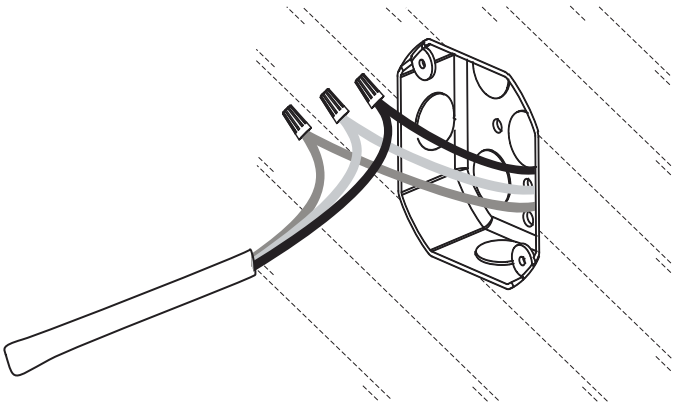

METHOD 2: FOR RECESSED

6

- The wall space is set aside in advance based on the size of the recessed led medicine cabinet

- The recommended installation safety distance is 8 inch(at least) from the ground.
- The exact mounting height should be determined by your height, with the field of view flush with the center of the mirror.

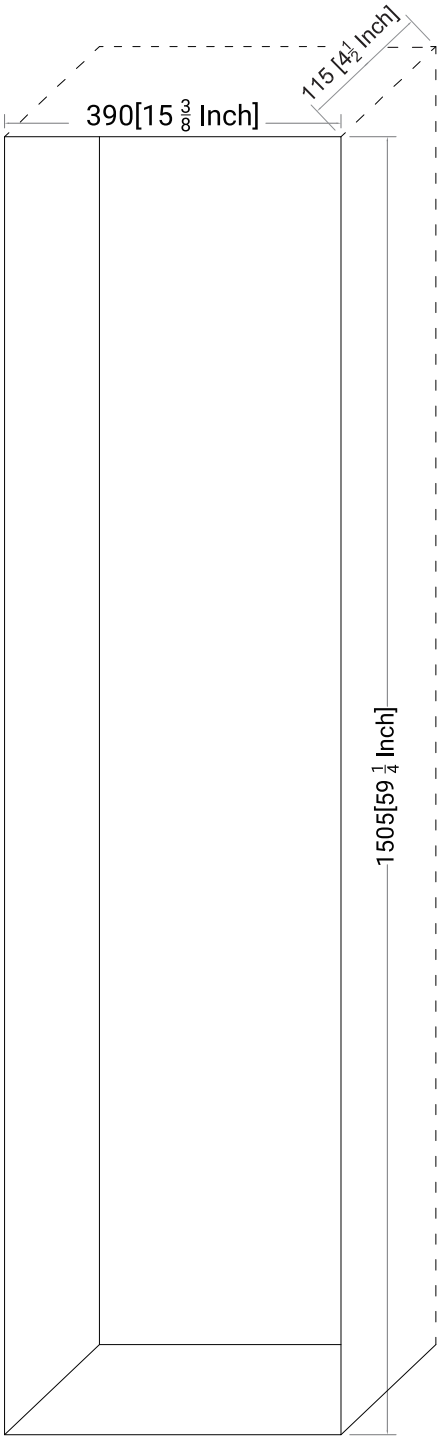

7

Plug the recessed led medicine cabinet.

●Hardwire Installation

Cut the plug and connect the mirror's wire to the power by the wire connectors.

⚠ DANGER: Before installation, make sure the main power is cut off.

BLACK WIRE --- POWER SUPPLY L (LIVE)
WHITE WIRE --- POWER SUPPLY N (NEUTRAL)
GREEN WIRE --- POWER SUPPLY E (EARTH)

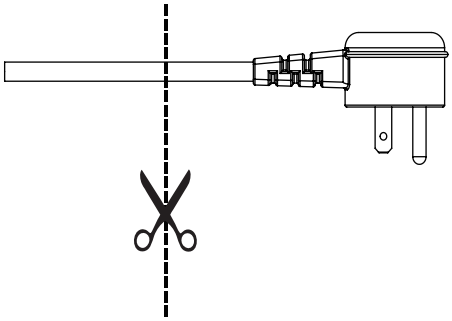

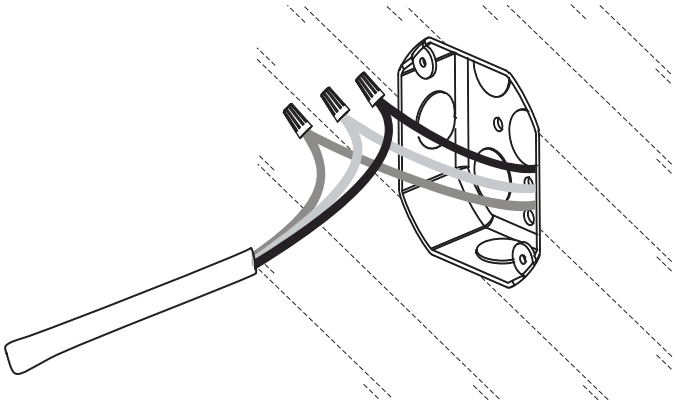

8

Install the recessed led medicine cabinet.

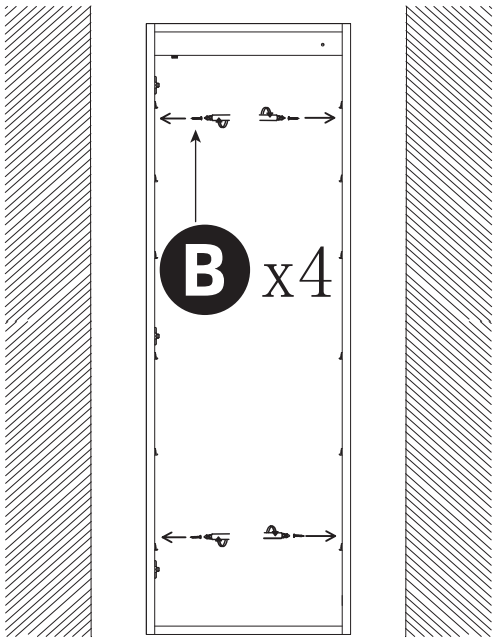

⚠ Note: Gently shake the mirror to ensure that the mirror is securely installed.

B 4 PCS

9

Insert the glass shelves

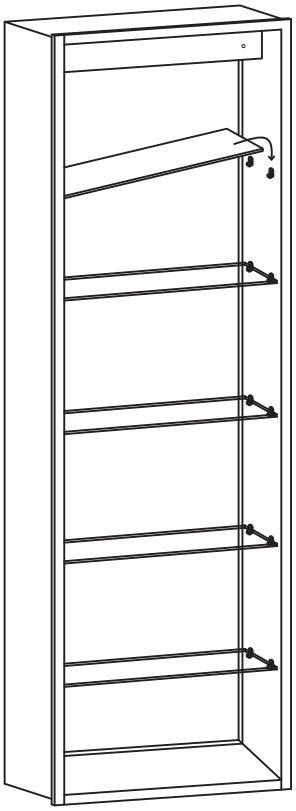

10

The installation has completed!

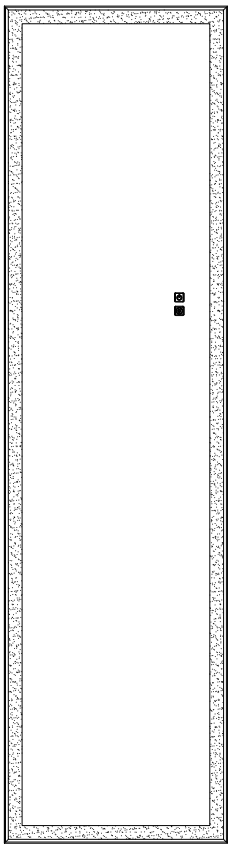

Congratulations!

PRODUCT SPECIFICATION

ITEM NO.:	Dimension	Watts	Lumens
MCBF1660	16 x 60 x 5.7 in	48W	4,220
MCBF1660R	16 x 60 x 5.7 in	48W	4,220

PARAMETER	SPECIFICATION
Wiring Method	Hardwired / Plug In
Input Voltage	AC100-120V
Output Voltage	12V DC
Switch	Touch Sensor Switch
Color Temperature	6000K-3000K
CRI	≧90 Ra
Nema Rate	3
Anti-fog	Yes\Automatically Powers Off
Life Span	25000 hours
Working Temperature	14~113℉

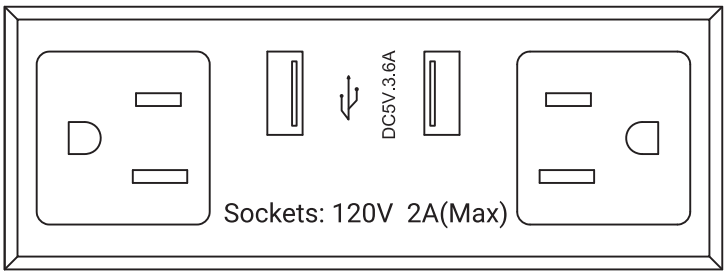

⚠ **Note:** Sockets: 120Vac, 2A(Max), 240W; Usb: 5Vac, 3.6A(Max), 18W; Not suitable for high power appliances.

HYDRAULIC HINGE ADJUSTMENT METHOD

Open the "DTC" cover in the direction of the arrow.
①: Adjust the door counterclockwise to move to the right,
Turn clockwise to adjust the door to move to the left.
②: Twist counterclockwise to loosen it,You can adjust the front and rear direction of the door.
Tighten clockwise after adjustment.

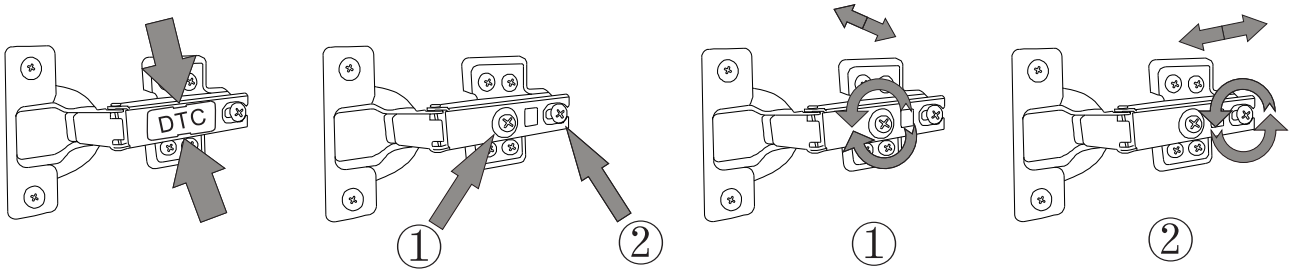

Note: Since this product has 3 DTC hinges on the left side of the cabinet, if you need to adjust the relative position of the cabinet door up and down and left and right, please adjust the hinges in order to use the product better.

Brand Support

Thank you for your support and for choosing our brand.
We greatly appreciate your business.

If you have any problem, please feel free to contact us:

homefixassist@outlook.com