PORTABLE ICE MAKER

USER MANUAL

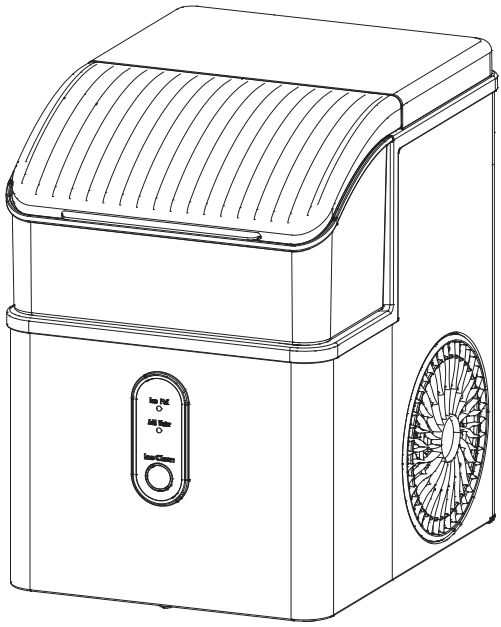

Model No.: HZB-15NH/S

Read this booklet thoroughly before using and save it for future reference

Tel: 888-698-2504

Web: www.electacticshop.com

Email: service@electacticshop.com

Scan the QR code to watch the product videos

CONTENTS

IMPORTANT SAFETY INSTRUCTIONS ---------- 1
KNOWING YOUR UNIT ---------- 4
USING YOUR UNIT ---------- 5
SYSTEM CLEANING PROCEDURE ---------- 7
TROUBLESHOOTING ---------- 11

IMPORTANT SAFETY INSTRUCTIONS

Your safety and the safety of others are very important.

We have provided many important safety messages in the manual for your appliance.
All safety messages will tell you what the potential hazard is, how to reduce the chance of injury, and what can happen if the instructions are not followed. Always read and obey all safety messages.

All safety messages will follow the safety alert symbol and the word "DANGER" or "WARNING" as shown below:

⚠ DANGER **⚠ WARNING**

These words mean: **Serious injury may occur if you don't immediately follow the instructions.**

When using electrical appliances, basic safety precautions should be followed to reduce the risk of fire, electric shock, and injury to persons or property. Read all instructions before using any appliance.

- Do not operate this, or any other appliance with a damaged cord. If the supply cord is damaged, it must be replaced by the manufacturer or its service agent or a similarly qualified person in order to avoid a hazard.
- This ice-maker must be positioned so that the plug is accessible.
- Connect to properly grounded outlets only. No other appliance should be plugged into the same outlet. Be sure that the plug is fully inserted into the receptacle.
- Do not run the power cord over carpeting or other heat insulators. Do not cover the cord. Keep cord away from traffic areas, and do not submerge in water.
- We do not recommend the use of an extension cord, as it may overheat and become a risk of fire. If you must use an extension cord, use No.14AWG minimum size and rated no less than 1875 watts.
  Unplug the ice maker before cleaning or making any repairs or servic-
- ing.
  Exercise caution and use reasonable supervision when appliance is
- used near children.

IMPORTANT SAFETY INSTRUCTIONS

- Do not use your ice-maker outdoors. Place the ice-maker away from direct sunlight and make sure that there is at least 6 inches of space between the back of your unit and wall. Keep a minimum distance of 6 inches on each side of your unit free.
- Do not use other liquid to make the ice-cube other than water.
- Do not clean your ice maker with flammable fluids. The fumes can create a fire hazard or explosion.
- Do not tip over.
- If the ice maker is brought in from outside in wintertime, give it a few hours to warm up to room temperature before plugging it in.
  WARNING - This appliance must be earthed.
- **DANGER -** Risk Of Fire or Explosion. Flammable Refrigerant Used. Do Not Use Mechanical Devices To Defrost Ice Maker. Do Not Puncture Refrigerant Tubing.



- **DANGER -** Risk Of Fire Or Explosion. Flammable Refrigerant Used. To Be Repaired Only By Trained Service Personnel. Do Not Puncture Refrigerant Tubing.

- **CAUTION -** Risk Of Fire Or Explosion. Flammable Refrigerant Used. Consult Repair Manual/Owner's Guide Before Attempting To Install Or Service This Product. All Safety Precautions Must Be Followed.
- **CAUTION -** Risk Of Fire Or Explosion. Dispose Of Properly In Accordance With Federal Or Local Regulations. Flammable Refrigerant Used.
  CAUTION - Risk Of Fire Or Explosion Due To Puncture Of Refrigerant
- Tubing.Follow Handling Instructions Carefully. Flammable Refrigerant Used.
  The ice maker should be installed in accordance with the safety stan-
- dard for Refrigeration Systems, ASHRAE15. The ice maker shall not be installed in corridors or hallways of public buildings.
  If the unit is with problem need to be maintained, that replacing with
- like components and that servicing shall be done by factory authorized service personnel, so as to minimize the risk of possible ignition due to incorrect parts or improper service.

IMPORTANT SAFETY INSTRUCTIONS

IMPORTANT:

The wires in this mains lead are colored in accordance with the following code:

Green or Green with a strip yellow	Grounding
White	Neutral
Black	Live

To avoid a hazard due to instability of the appliance, it must be placed at an even or flat surface.

KNOWING YOUR UNIT

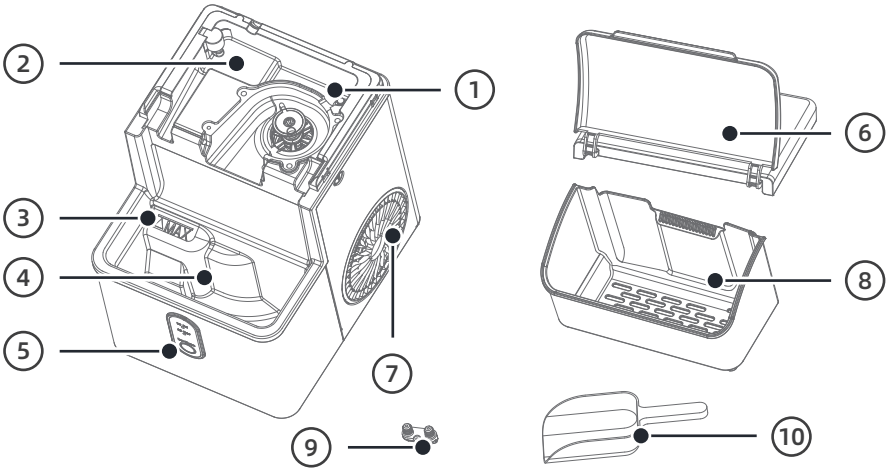

① Float Switch	② Secondary Water Tank	③ Maximum Water Level	④ Water Tank
⑤ Control Panel	⑥ Top Cover	⑦ Hot Air Outlet	⑧ Ice Basket
⑨ Water Drain Cap		⑩ Ice Scoop	

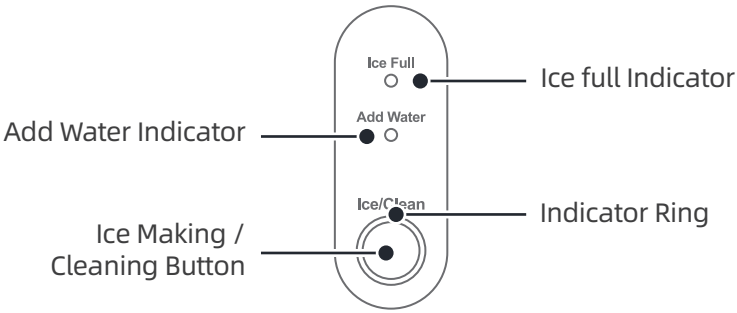

Control Panel

USING YOUR UNIT

Before First Use

Unpacking and Inspection

- Remove all exterior and interior packaging materials.
- Check that all accessories are included.
- If any parts are missing, please contact Customer Service.
- Remove all tapes and take out any accessory parts inside the unit.

Placement and Standing Time

- Place the ice maker on a level countertop.
- Keep the unit away from direct sunlight and heat sources such as stoves, furnaces, or radiators.
- Maintain at least 6 inches of clearance on all sides and the back of the unit. Ensure the power plug is easily accessible.
- Let the unit stand upright for 6 hour before plugging it in to allow the refrigerant to settle.

Power Supply and Safety

- This appliance must be plugged into a properly grounded wall outlet.
- Do not remove or damage the grounding prong.
- Improper use of the grounded plug may result in electric shock.
- If the power cord is damaged, contact Customer Service immediately.
- Power requirement: 110-120 V~, 60 Hz.

Water Requirement

⚠ WARNING

- Fill with potable water only.
- Use drinking water only.

USING YOUR UNIT

Cleaning Before First Operation

- Unplug the unit before cleaning.
- Clean the interior with warm water, mild detergent, and a soft cloth.
- Rinse with clean water and drain the water by removing the drain cap located at the front bottom of the unit.
- Clean the exterior with warm water and mild detergent.
- Dry the unit thoroughly before first use.

Operation Instruction

1. Remove the ice basket. Pour portable (drinking) water into the water tank. Do not add more than 0.3 gallons of water at one time.

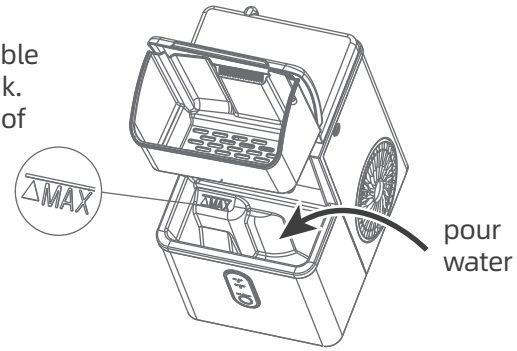

2. Reinstall the ice basket properly.
   Note: Make sure the water drain cap is securely inserted into the appliance. If the drain cap is not in place, the unit will not operate properly.
3. Plug the unit into a power outlet. The ring indicator will light up red, indicating standby mode.
4. Press the "Ice/Clean" button once. The ring indicator will flash white, and the unit will begin making ice. Press the "Ice/Clean" button again to stop ice making.
   - Add Water Indicator: During ice making, if the "Add Water" indicator lights up and the unit stops operating, add water to the tank. After adding water, restart the unit. If not restarted manually, the unit will resume operation automatically after a period of time. When restarting, the compressor will have a 3-minute delay for protection.
   - Ice Full Indicator: When the ice basket is full, the unit will stop operating automatically. The "Ice Full" indicator will light up and the ring indicator will remain white. After removing the ice, the unit will resume ice making automatically.

SYSTEM CLEANING PROCEDURE

Automatic Cleaning Mode

For first-time use or if the unit has not been cleaned for a long period, it is strongly recommended to run the cleaning procedure before making ice.

1. Make sure the bottom water drain cap is properly inserted; otherwise, the unit will not operate correctly.

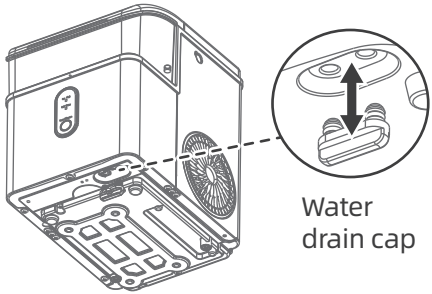

2. Plug in the ice maker.

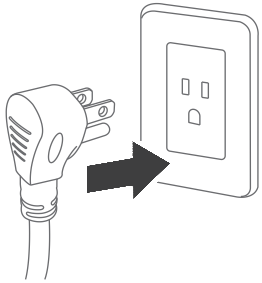

3. Press and hold the "Ice/Clean" button for 5 seconds.

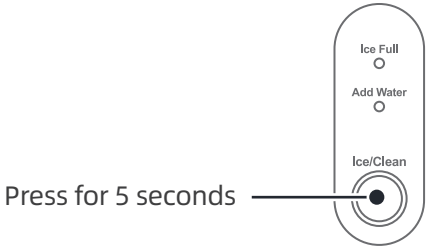

SYSTEM CLEANING PROCEDURE

4. The ring indicator light will flash white, and the unit will start the automatic cleaning cycle (approximately 15 minutes). The unit will stop automatically when the cleaning cycle is complete. To stop cleaning manually, press the "Ice/Clean" button again.

5. After the cleaning cycle is complete, remove the top cover and the ice basket.

   Tip: Remove the top cover by gently pulling up the front clear cover.

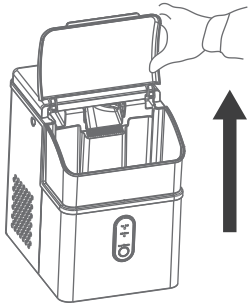

6. Rinse both the main water tank and the secondary water tank with clean water.

7. Move the appliance to the edge of a countertop and place a container underneath. Remove the bottom drain cap to drain the dirty water, then reinstall the drain cap securely.

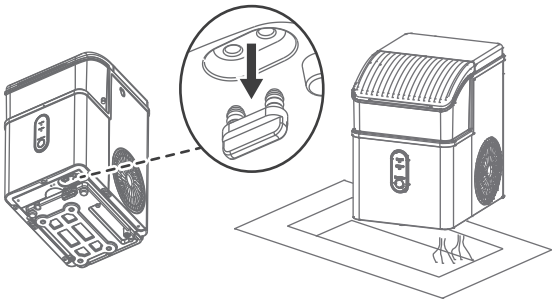

8. Reinsert the drain cap.

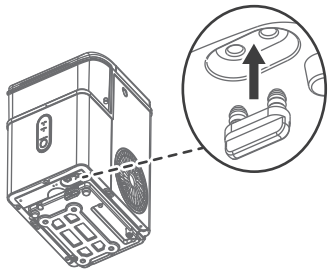

SYSTEM CLEANING PROCEDURE

Sanitizing Procedure

1. Unplug the ice maker.

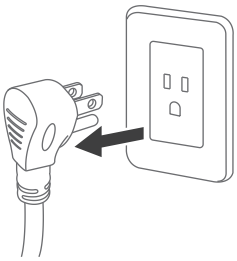

2. Remove the bottom drain cap and drain all remaining water into a sink.

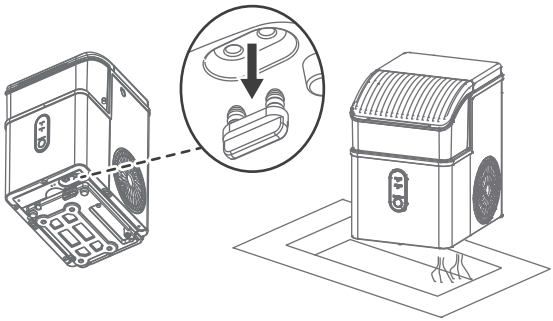

3. Monthly descaling (mineral removal):
   For removing mineral deposits, use white vinegar instead of water. Pour the vinegar into the unit, plug in the appliance, and run the cleaning function for about 5 minutes. Then unplug the unit again and leave the white vinegar inside for more than 12 hours.

4. Fill the water tank with the cleaning solution (or fresh water), up to the "MAX" water level.

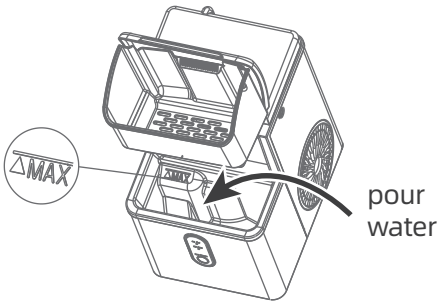

SYSTEM CLEANING PROCEDURE

5. Start the cleaning cycle. (See "Automatic Cleaning Mode").

6. When the ring indicator light turns off, remove the bottom drain cap and drain the water into a sink.

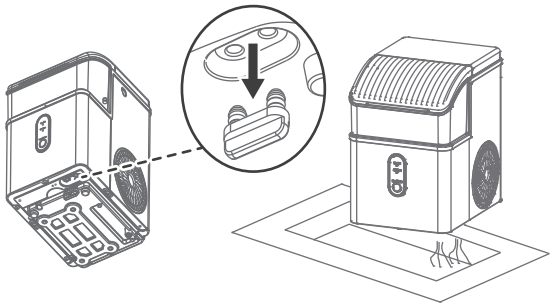

7. Repeat Steps 4 to 6 using fresh water for two additional cycles to thoroughly rinse the interior.

8. Reinstall the drain cap securely on the bottom of the unit.

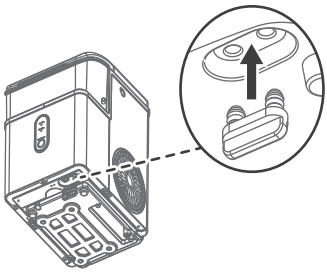

9. Fill the unit with fresh drinking water and press the "Ice/Clean" button to start the ice-making process.

TROUBLESHOOTING

Problem	Cause	Solution
Add Water indicator turns on.	Insufficient water level.	Stop the ice maker, add potable water, then press the Ice/Clean button again to restart the unit.
Ice Full indicator turns on.	Ice basket is full.	Remove some ice cubes to allow ice making to continue.
	Ice cubes are stuck or absent.	Clear any blockage inside the basket or clean the inner wall of the ice basket.
Ring indicator light flashes red.	Ambient temperature or water temperature is too high.	Operate the ice maker at an ambient temperature below 90°F (32°C) and fill the tank with cold water.
	Refrigerant liquid leakage.	Press the "Ice/Clean" button twice to restart the ice-making program. If the problem occurs again, please contact Customer Service.
	Cooling system pipe is blocked.	
Ring Indicator flashing fast then slow.	Ice jam.	Evaporator frozen: Power off the unit for 2 hours, then clean the unit.
	Ice pusher malfunction.	Please contact Customer Service.
Ice making is too slow.	Hot air outlet is blocked.	Ensure the hot air outlet has at least 6 inches (15 cm) of clearance for proper ventilation.
	Water temperature in the tank is too high.	Use water between 45°F–90°F (7°C–32°C) for optimal ice-making performance.
	Refrigeration system malfunctions.	Please contact Customer Service.
Water leakage.	Drain cap is not installed properly.	Ensure the drain cap is securely inserted.
	Loose internal pipe connection.	Please contact Customer Service.
	Sealing components have reached the end of service life.	

8:30am-5:30pm P.S.T.
Monday to Friday

Thank you for purchasing this product! If you have any questions about the product such as missing parts, damaged products, product assembling and operation, please contact us via customer service team:

Email: service@electacticshop.com

Web: www.electacticshop.com

Tel: 888-698-2504