PALRAM

# SUNSKY®

Corrugated Polycarbonate Skylight & Side Light Panels for Commercial Applications

## Installation Guide

palram.com/us

## Contents


| | | |
|---|---|---|
| A. | Introduction | 1 |
| B. | Profile Matching | 3 |
| C. | Transportation, Handling & Storage | 3 |
| D. | Chemical Resistance and Fire Hazard Comments | 4 |
| E. | Sawing, Cutting & Drilling | 4 |
| F. | Safety Measures (during installation and afterwards) | 5 |
| G. | Panel Orientation | 5 |
| H. | General Information for Installation | 5 |
| I. | Installation Comments (Roofing & Siding) | 7 |
| J. | Fastening & Sealing | 8 |
| K. | Recommended Washers & Fasteners | 8 |
| L. | Side & End Lap Installation | 11 |
| M. | Options for Installation | 13 |
| N. | Important Installation Comments | 16 |
| O. | Expansion & Contraction Table for SunSky Corrugated Polycarbonate | 17 |


### FBC Approved Installation Instructions

FBC APPROVED

To obtain FBC approval, certain installation requirements must be met. For information about Florida Building Code requirements and FBC approval and installation instructions, visit the FBC web site at **floridabuilding.org**. Product approval numbers are 11238 (roof decks) and 11240 (structural walls).

### TDI Approved Installation Instructions

Sunsky 12 in 1mm and 1.5mm thicknesses are approved by the Texas Department of Insurance (TDI) for use in Tier III coastal counties. The FBC installation instructions must also be followed for this approval.

TDI TEXAS DEPARTMENT OF INSURANCE ENGINEERING

## A. Introduction:

SunSky is a high quality light-transmitting, corrugated polycarbonate panel designed to match the profiles of major types of metal roofing and siding panels. It is designed for single or multi-panel skylights or side lights in roofs and walls of metal-clad structures.

Figure 1: Various SunSky Skylight and Side Light Arrangements

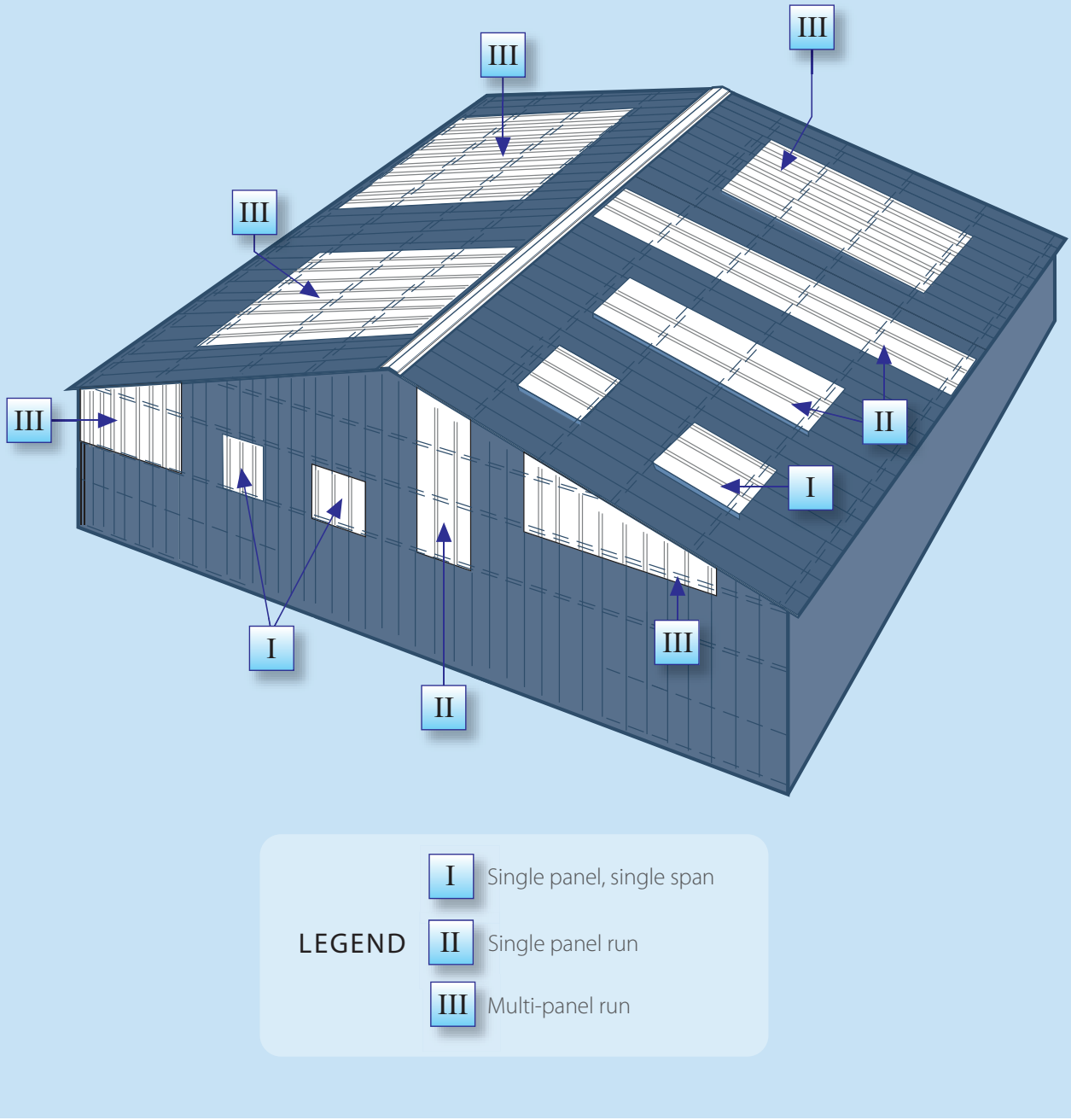

**IMPORTANT INFORMATION** Each SunSky profile has its own additional profile-specific Technical and Installation addendum which includes additional details such as:

- Profile Drawings and Dimensions
- Load and Span Data
- Maximum Recommended Lengths
- Maximum Recommended Radius
- Fastener Recommendations and Schedules

Installation and Technical Spec addendums for each SunSky profile are available here: palram.com/us/product/sunsky. If viewing this document as a PDF, click on the Link button for any of the profiles listed below to download the related Installation and Tech Spec addendum document.

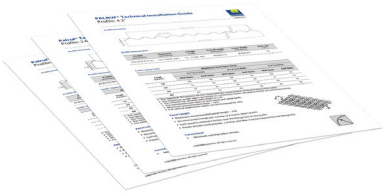

## Table 1 Stock Profiles and Availability*

| Link | Profile Name/ Profile # | Basic Profile Dimensions | Thicknesses (mm) | | | Standard Lengths (Ft.) | | | | | Colors | | | |
|---|---|---|---|---|---|---|---|---|---|---|---|---|---|---|
| | | | 0.8 | 1.0 | 1.20 | 8' | 10' | 10½' | 12' | 16' | Clear | Soft White | White | Solar Gray |
| ▼ | SunSky 9" | 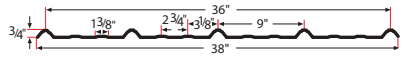 | ✔ | ✔ | | ✔ | ✔ | | ✔ | ✔ | ✔ | ✔ | ✔ | ✔ |
| ▼ | SunSky 12" |  | ✔ | ✔ | | ✔ | ✔ | | ✔ | ✔ | ✔ | ✔ | ✔ | |
| | SunSky Ridge Caps | 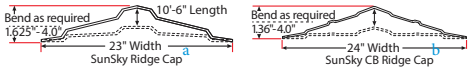 | | ✔[a] | ✔[b] | | | ✔ | | | ✔ | ✔ | ✔ | |

Common Limited Stock Specialty Profiles* *(Minimal stock available on hand, most subject to minimum order requirements. Other profiles available.)*

| | | | | | | | | | | | | | | |
|---|---|---|---|---|---|---|---|---|---|---|---|---|---|---|
| ▼ | 9" Classic Rib | 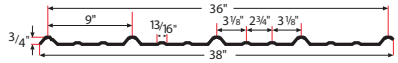 | ✔ | | | ✔ | ✔ | | ✔ | ✔ | ✔ | | ✔ | |
| ▼ | 9" ProPanel II | 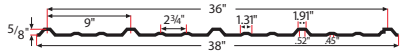 | ✔ | | | ✔ | ✔ | | ✔ | | ✔ | | ✔ | |
| ▼ | 9" Frontier (a.k.a. SUNTUF 6010) | 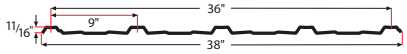 | ✔ | | | | | | ✔ | | ✔ | | | |
| ▼ | 7.2 MegaRib |  | | ✔ | | | | | ✔ | | ✔ | | | |
| ▼ | 2.67" LP 7190 | 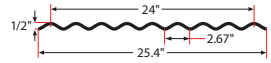 | | ✔ | | | | | ✔ | | ✔ | | ✔ | |
| ▼ | 2.67" SP | 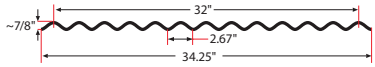 | | ✔ | | | | | ✔ | | | | ✔ | |
| ▼ | 5V Crimp 6710 | 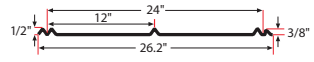 | | ✔ | | | ✔ | | ✔ | | ✔ | | ✔ | |
| ▼ | Sunsky Mini | 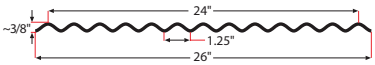 | ✔ | | | | | | ✔ | | ✔ | | ✔ | |
| ▼ | U-Panel 9600 | 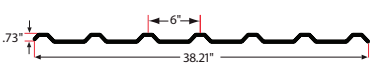 | ✔ | | | | | | ✔ | | | | ✔ | |

** Special dimensions and colors are available, subject to minimum order.*

## B. Profile Matching:

1. SunSky 9 and 12 profiles were designed to closely match commonly used metal profiles. These profiles, produced by a few major US suppliers, are manufactured with 5 and 4 main corrugations of 9" and 12" spacing respectively, with two minor corrugations in between. Other panels, appearing to be similar, differ in small but important ways and an exact match may be difficult to achieve.
2. SunSky 12" profile will not fit closely over or under the older R-Panel, produced with one central minor corrugation.
3. Slight detail differences such as corrugation height, slant, wave distance etc. will hinder exact matching of such a panel with a SunSky profile. This may lead to insufficient sealing, water leakage and forced installation, putting undue stresses on the SunSky panel while trying to adapt it to an "almost similar" metal profile. **Undue stress may lead to premature failure and void any and all warranties.**
4. A careful comparison will disclose whether a standard SunSky panel matches your metal profile.

**Don't See a Match For Your Metal Profile?**

Palram maintains the world's largest polycarbonate profile portfolio. If we don't have a profile that matches yours, we can probably custom-match it using MetalMatch technology.

To learn more visit go.palram.com/profiles and review the portfolio or complete the form.

PALRAM Metal Match® PC PROFILE TECHNOLOGY

## C. Transportation, Handling & Storage:

1. Transport and store SunSky panels horizontally on flat, sturdy pallets, equal to or longer than the longest panels. Short panels should be stacked on top of longer ones. The panels should be secured and fastened to the pallet during transportation.
2. Store SunSky panels in a cool and shaded place, out of direct sunlight. Avoid covering the stack of panels with dark or heat-absorbing materials or objects, to prevent solar heat buildup.
3. When necessary to store panels outdoors, cover the stack with a white opaque polyethylene sheet, or another material that does not absorb or conduct heat. Be sure that the entire stack is covered.
4. SunSky panels are tough, requiring no special care. However, we recommend some cautionary steps:
   - Avoid stepping on the panel, driving over the panel, or folding the panel when handling and installing.
   - Avoid dragging the panel on the ground, scraping it against the structural elements, or any other sharp or rough objects, to prevent the panel from getting scratched.



Figure 2

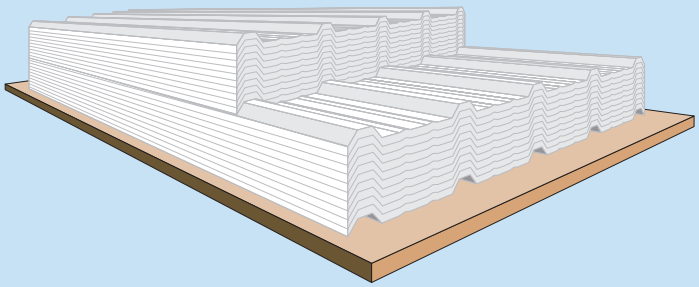

Figure 3

Storage of Panels

## D. Chemical Resistance and Fire Hazard Comments:

1. SunSky panels are resistant to a variety of chemicals and exhibit limited resistance to a second group of chemicals. A third group of chemicals may attack and damage the panel. Degree & severity of damage depends upon chemical type and duration of exposure.

   Consult the Chemical Resistance Table that can be downloaded at palram.com/us/chemical-resistance.
   When in doubt, consult the Palram Technical Support Department or your distributor.

2. SunSky panels will melt at approximately 400°F, generating vent openings for smoke release in the event of fire.
   Standard operating temperature range for polycarbonate is -40 °F to 212 °F.

## E. Sawing, Cutting & Drilling:

1. SunSky panels can be cut or sawed by manual or power tools. A bench/table circular saw is best for straight long cuts. For better results, cut a few panels together. Portable circular saws are suitable for on-site straight cuts. A jigsaw is used for cutting a limited length of irregular or curved lines. Hand tools such as handsaw, metal shears or hand-held cutting knives can be used for localized, limited work.
2. Sawing is done with plywood saw blade, installed in reverse direction, with small teeth, or special blades for plastics, spinning at high speeds, with a slow feed rate. Panels should be clamped during sawing, to avoid vibrations. Avoid intersecting cuts. Drill a hole at intersection point, then cut the panel up to the hole.
3. Drilling is done using a power drill, with regular high-speed steel bits intended for metal, rotating at about 1,000 RPM. Better results with SunSky are achieved using bits ground to shallower tip angle than for metal. Clamp the drilled panel down to avoid vibrations or movement during operation.
4. Keep the cut area clean. Blow away saw and drill dust with compressed air.



Sawing the panels
Figure 4

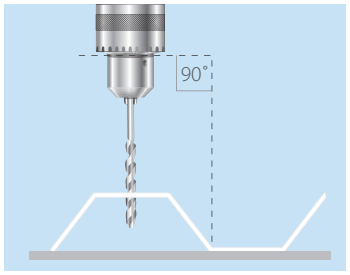


Drilling the panels
Figure 5

## F. Safety Measures (during installation and afterwards):

1. Use ladders, crawling boards and other safety equipment required for safe installation. Be sure to wear appropriate personal protection equipment such as proper gloves, safety glasses, etc. Use all safety measures required according to local safety regulations.
2. Always use appropriate scaffolding to service panels. Scaffolding should provide proper worker safety and ensure proper placement and distribution of weight to avoid damage to panels.

   **Do not walk on panels for fear of falling and other severe bodily harm.**
3. Never leave SunSky panels unattended on the roof until all the required fasteners have been appropriately installed or the panels secured to the supporting structure.
4. Always follow local and/or national building and OSHA safety codes.



**WARNING!**
**Do not step directly on panels between the purlins! Use scaffolds, ladders, or crawl boards.**
Figure 6

## G. Panel Orientation:

1. SunSky's exterior surface is UV resistant, indicated by labeled strips on protected side. **Install the panel with the labeled side out.** The protected side is up when panel edges are both pointing down.
2. Installation Direction: For multi-panel runs, begin installation of SunSky on the side away from wind and rain direction.

**WARNING!**
Fatal falls and serious injuries may result from inadequate guarding and fall protection for work around skylights and roof and floor openings.

## H. General Information for Installation:

1. **Roof Pitch:** SunSky performs best when installed at pitch rates of 10 percent (1":10" slope or 5.7°) or more. If installed at a lower pitch, additional sealing should be applied to ensure weather resistance. A minimum slope of more than 5% is recommended when installing SunSky.
2. **Load Rating and Maximum Recommended Distance** (Typical profile variations are considered the same): The depicted distances refer to a single panel, single-span installation on surrounding supportive compatible metal cladding.

2.1 **Load Rating Values:** SunSky panels load rating will vary according to the arrangement of panel(s) and existing or designed spans, as mentioned above.

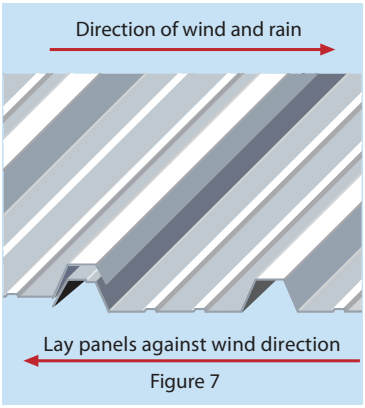

Figure 7

3. **Uplift Testing:** SunSky corrugated polycarbonate panels meet Uplift Test Criteria specified in UL 580 Test for Uplift Resistance of Roof Assemblies (UL Class 90). Consult Palram Americas technical support for additional details if necessary.

### Test Description

**Roof Covering:** Corrugated polycarbonate roof panels with 9 inch spaced corrugations. The tested material comes in 0. 032" thick x 38" width and 12 feet long.

**Fastener:** #12 - 14 x 1-1/4" Type 2 Structural Drilling Fastener, carbon steel, zinc plate with 3/4" O. D. heavy EPDM/galvanized washer.

### Uplift Test Results

A buckled hip was visible during the test. The fasteners were in place and no cracks or breaks were found in the SunSky panels. The test assembly withstood all phases of testing for Class 90. The roof assembly described in this report met the uplift test criteria specified in UL 580 - Test for Uplift Resistance of Roof Assemblies. **Note:** The buckled hip returned to the original shape after testing with no panel damage or permanent deformation.

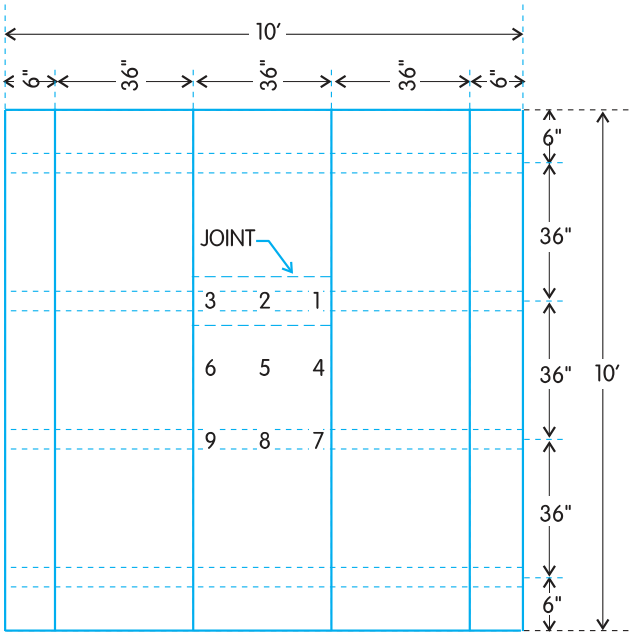


Figure 8

4. **Purlin & Girt Spacing:** Purlin and girt spacing are usually dictated by overall design and engineering calculations along which the whole structure is constructed. SunSky panels are installed at the same purlin/girt spacing as the rest of the metal panels in the structure.

Verify that the installed SunSky panels will remain within the uniform load-supporting limits of deflection as observed by the Evaluation Acceptance tests (see the “Uniform Load” diagrams and “Uplift” paragraphs).

In case purlin/girt spacing of the metal-clad structure surpass the values depicted in the tables by a significant margin (especially in multi-panel runs), a secondary support system, based on data in the above mentioned tables, should be prepared for the SunSky skylight or side light.

When support spacing is marginally larger, on-site environmental conditions should be considered and acted upon.

## I. Installation Comments (Roofing & Siding):

1. **Single Panel Run Installation:** The length (long side) outermost crests of a SunSky panel should lap over matching adjacent crests of metal panels on both sides.
2. **Multi-Panel Run Installation:** The middle SunSky panels should be installed with the regular under/over length overlap (the short crest edge on top of a longer one). The outermost SunSky panels on both length sides will lap over the adjacent matching metal panels, as in a single panel run, unless designed otherwise.

   **Important!** Whenever the extreme side-laps of a skylight or side light side-laps are installed on top of the adjoining metal panels, the overlapping metal panel(s) above the opening should also be installed the same.
3. **Framed Independent Side Light Installation:** An installation method for side lights, requiring framing for the apertures in the siding. Frame details enable installation of any SunSky profile, independent of the surrounding wall cladding.

   Aluminum profile framing is very suitable, relatively inexpensive, and available in a wide variety of shapes, and is easy to work with (Custom shapes are available with minimum quantity requirements). Fabricated zinc plated, painted or stainless steel sheet are possible options, moderately priced and easy to fabricate. Wood framing is also possible, especially for small-scale and DIY jobs. Typically, the designs of these structures are more simple to build, and requires only basic everyday tools.
4. **Side-lap Support:** At side-laps where the SunSky edge corrugation has to be installed under the corrugation of the adjoining metal panel, or in SunSky on SunSky side-laps (multi-panel runs) length support profiles, of metal or wood, are recommended. Such length supports ensures better side seal and rigid installation. (See Fig. 17, 32)

   Support details should suit the SunSky profile used.

**SunSky skylights in roofing:**

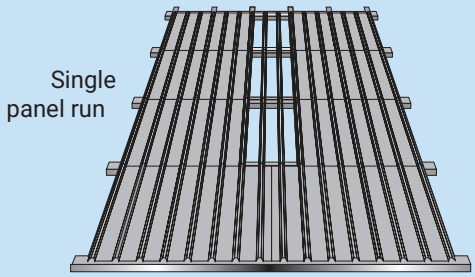


Figure 9




Figure 10

**SunSky side lights in siding:**

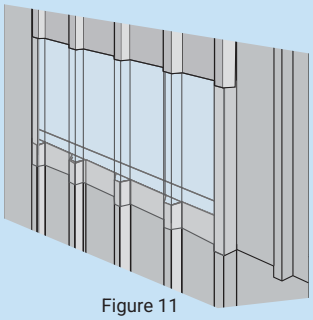

Single-span,
single-panel
side light depiction

Figure 11

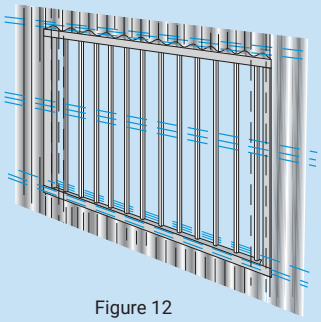

Multi-span,
multi-panel
framed side light

Figure 12

## J. Fastening & Sealing:

Each specific profile has its own specific recommended fastener schedule. See page 2 for links to each profile tech addendum, or visit palram.com/us/product/sunsky.

Figure 13 serves as an example of the information presented.

SunSky 12"

Figure 13. Example of fasteners schedule found in specific addendums

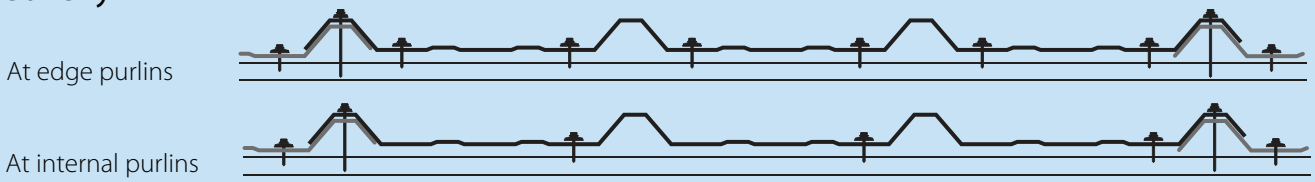


## K. Recommended Washers & Fasteners

Use of recommended fasteners and washers, along with careful execution according to the installation instructions is essential for maximum product performance. Palram brand EPDM-washered fasteners for Sunsky have been tested and certified to be compatible with polycarbonate, whereas other brands may not be. Incompatible washers can result in panel failure that is not covered by warranty. Contact your Palram representative for availability. For fasteners shown below, pre-drill fastener holes with a 3/8" drill bit to accommodate thermal expansion & contraction of the panel. Over-size holes by an extra 1/8" for other fastener diameters. Failure to accommodate for thermal movement may cause buckling of the sheet and, potentially, eventual failure. Fasteners shown below are available from Palram.

### Umbrella Washer



19 mm

### Fastener Tip Types



Sharp Point (a.k.a. A Point)



Self Drilling

### For Side Laps



Grommet

### Table 2 Recommended Fasteners

| Targeted Use | Fastener | Palram Item# | Description | Fastener Shank Gauge | x | Fastener Length | Fastener Head Size | Corrosion Resistance* |
|---|---|---|---|---|---|---|---|---|
| Wood |  | 93034 | #14 x 1 | 14 | x | 1" | 5/16" | Mechanically Zinc Coated Carbon Steel |
| | | 9008326 | #14 x 1-1/2 | | x | 1-1/2" | | |
| | | 93035 | #14 x 2 | | x | 2" | | |
| | | 9006380 | #14 x 3 | | x | 3" | | |
| Metal |  | 93036† | #14 x 1 | 14 | x | 1" | 3/8" | |
| | | 9008324 | #14 x 1-1/2 | | | 1-1/2" | | |
| | | 93037 | #14 x 2 | | x | 2" | | |
| | | 9006379 | #14 x 3 | | | 3" | | |
| Polycarbonate (PC) (For PC to PC side laps) |  | 93470 | 1/4" x 1" Rubber Grommet | 1/4" | x | 1" | 1/4" | Stainless Steel / EPDM |

* Mechanically Zinc Coated Carbon Steel fasteners are designed to withstand years of exposure to Mother Nature's most tortuous elements, however, if installing SunSky in a location with above normal exposure to salt-air, chemicals, or pollutants, use 304 Stainless Steel fasteners (see Dealer for details).

† Also used as stitch screw on steel to polycarbonate side laps.

4. **Palram Recommended Washer / Fastener Combination:** Palram Recommended Washer / Fastener combination was chosen after comprehensive performance testing. The "umbrella" shaped gaskets seal the fastener holes & heads well without exerting excessive pressure on the SunSky panel itself. Limited thermal expansion is possible and compatibility with polycarbonate assured. **Regular Washer/Gaskets Fasteners (e.g. Tek Screws) for metal panels are NOT RECOMMENDED for use with SunSky as these types of washers apply excessive pressure, are inadequate for SunSky sealing, and cause undue internal stresses in the panel. The stresses result in crazing, fractures, and eventual failure. Installations using such fasteners are strongly discouraged and are subject to nullification of warranty.**

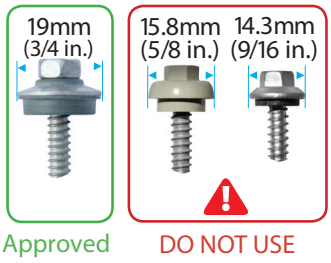


5. **Installation & Fastening Tips:**

a. **Allow for expansion & contraction at fasteners:** For panels longer than 12', pre-drill panels at all fastening points with a 3/8" hole to allow for increased expansion and contraction due to longer length. For panels 12' in length or less, pre-drill a hole 1/16" larger than the diameter of the fastener shank. Palram recommends that SunSky panels are not installed below 40°F or above 80°F. See Page 17, Table 3, for detailed SunSky Thermal Expansion Data.

b. **Drive fasteners perpendicular to SunSky face.** Use an adjustable-torque power screwdriver to ensure against over tightening. Avoid distortion of washer/gasket and panel. (See fastener positioning details - Figure 14a and 14b). **Never use an impact wrench/driver for fastening SunSky.**

c. **Installation Direction:** We recommend starting installation from the bottom up, on one side, and work to the left or right accordingly. **Never start working from both ends to the middle.** Always lap the top panel over the lower one.

d. **Keep panel straight, flush and taut during installation.**

e. **Do not over tighten (see important note above and Figures14a & 14b)**

f. **Side-Lap Support:** At a side-lap of metal on SunSky or two SunSky panels (multi-panel installation) a lengthwise wood or steel support bar may be required.

g. **Fastening Details** (Schematic Figures 15, 16, 17, and 18):
1. SunSky panel
2. Adjoining metal panel
3. Valley fastener, with 3/4" Washer
4. Metal crest / valley fastener
5. Side-lap fastener with 3/4" washer
6. Side-lap stitching fastener and 3/4" washer
7. Butyl-rubber or expanding sealing strip
8. Optional side-lap support bar

h. **Fasteners Positioning Comments:**

- Generally, valley fasteners should be installed at the top & bottom edges, and at end-laps of SunSky panels, as shown on Page 8, Section J, Figure13.
- In multi-panel runs, the number of fasteners can be reduced at mid-purlins, unless conditions demand otherwise. The remaining fasteners should be evenly positioned adjoining the main corrugations of the specific panel.
- Stitching screws should be distributed 12"-16" apart. For polycarbonate to polycarbonate side laps, please use the 1" Rubber grommet shown in Table 2 Recommended Fasteners.

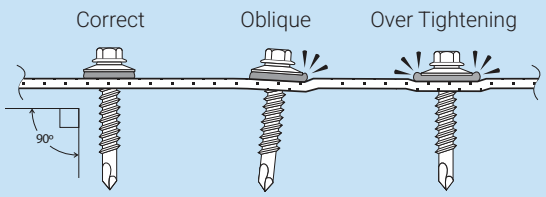

Right & wrong fastener insertion
Figure 14a

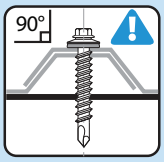

Figure 14b

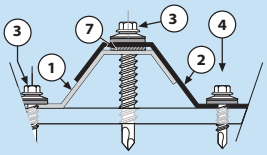

Figure 15

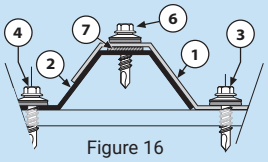

Figure 16

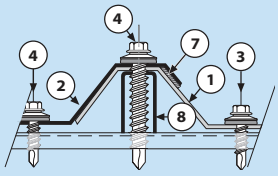

Figure 17

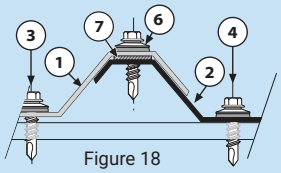

Figure 18

6. **Sealing SunSky:**

a. **Self-Adhesive XPE Sealing Tape** (Expanded Cross-Linked Polyethylene): Resilient, closed cells, self-adhesive foamed-polyethylene to be applied at sides & end-laps, on top of the overlapped area. Cross-section dimensions may vary according to specific requirements. A typical XPE tape is 3/4" (20.0 mm) in width, 3/16" (5.0 mm) in thickness and comes with pressure sensitive adhesive on one side, protected by silicone paper.

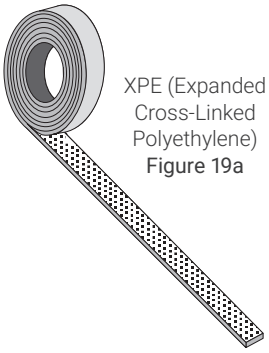

XPE (Expanded Cross-Linked Polyethylene)
Figure 19a

**Butyl-Rubber or Expanding Sealing Tape:** Elastomeric or Expanding Sealing Tape to be applied at side & end-laps, on top of the overlapped area. Do not use mastic tape. All sealing tapes must be 100% compatible with polycarbonate as specified by the sealing tape manufacturer.

**Install as follows:** (See Page 9, Figures 15-18 and Page 11, Figures 20-22) Remove bottom protective paper strip progressively, as installation advances. Apply carefully by hand.

- **Single seal end-lap:** Apply along fasteners' center-line at the end-lap, following the profile shape.
- **Double seal end-lap:** Apply above and below fasteners' center-line at end-lap, following the profile shape.
- **Single seal side-lap of Sunsky over metal panel:** Apply on top of center-line of side corrugations.
- **Single seal side-lap of metal over Sunsky panel:** Apply between to the down facing corrugation of the metal panel and the Sunsky panel to prevent capillary action.
- **With butyl-rubber only:** Remove top protective paper strip before laying the overlapping panel. Lay the edge of lapping panel and apply moderate hand pressure on the top panel along the side corrugation, to ensure a proper seal.

b. **Top & Bottom Contoured End Closures:** Top or bottom matching closure strips close the opening above or below the panel and its corrugations.

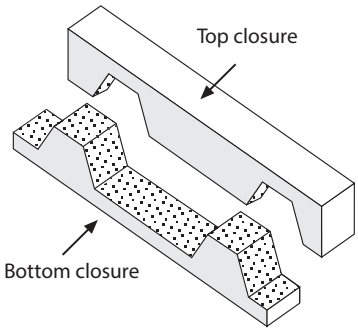


Top & Bottom End Closures (SunSky 12")
Figure 19b

**Install as follows:** Place the closure strip at the top or bottom edge fasteners' center-line, and insert the fasteners through said strip so it will be held firmly in place. A few dabs of silicone could hold the strip temporarily in place until the top panel is laid and screws are inserted. (Figures 23a, 23b, 24a & 24b)

- **Location A:** Where SunSky runs reach the top or bottom of roof or wall edges, or at the roof ridge, the space left between the panel's profile and the purlin, or girt, should be closed and sealed with a contoured foam, polyethylene (XPE) closure strip matching the panel profile.
- **Location B:** Where SunSky runs reach a top trim, or at a ridge-cap, a top closure strip should be used at the top edge above the panel.

c. ***Silicone Sealants: Sealants, adhesives or bonding materials may be found to be incompatible, and can chemically attack the panels, originate failure, and revoke any and all warranties. Please contact sealant and/or sealing tape manufacturer to insure its compatibility with polycarbonate prior to use. Palram Americas, Inc. will not be responsible for panel failure due to chemical incompatibility with the sealant and/or sealing tape.***

## L. Side & End Lap Installation:

End lap (or width overlap - short side) of a SunSky panel on another consecutive SunSky or metal R-panel, should always be done over a supporting purlin. Each of the panels involved should overhang the purlin center-line by about 3" (2" minimum and 4" maximum), totaling an average overlap of 6".

### Fastener and Sealing Tape Locations

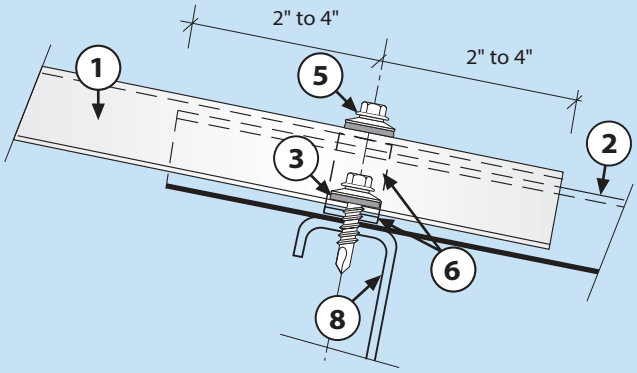


End-Lap Detail
Figure 20

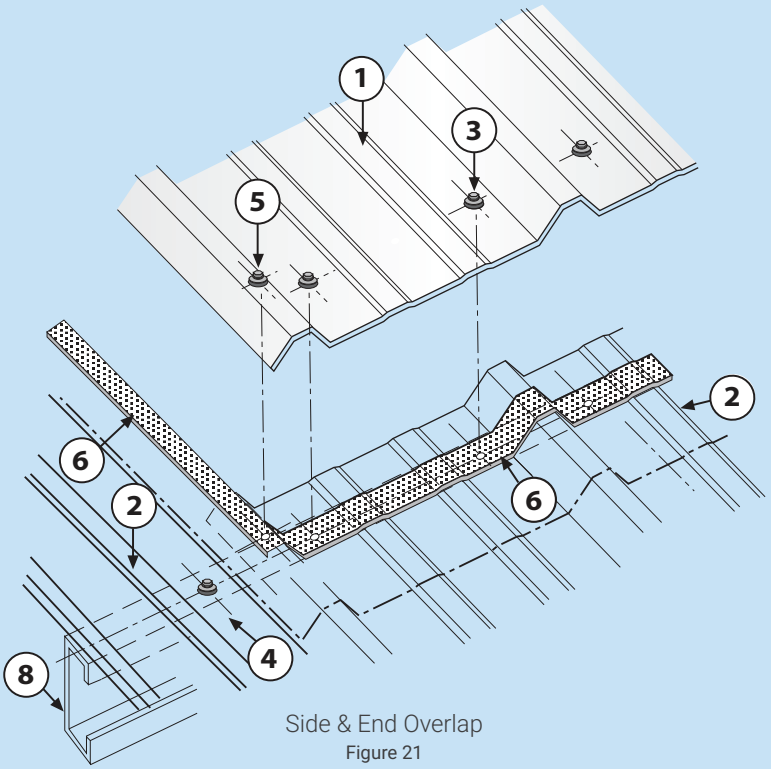


Side & End Overlap
Figure 21

Legend

1. Representative SunSky panel
2. Representative panel
3. SunSky valley fastener, with Palram 3/4" special washer gasket
4. Typical sheet-metal crest or valley fastener with 3/4" washer and gasket
5. SunSky crest (side-lap) fastener with Palram 3/4" special washer & gasket
6. Sealing tape installed along side & end lap corrugations
7. Shaped bottom-end closure
8. Supporting purlin
9. Optional drainage gutter

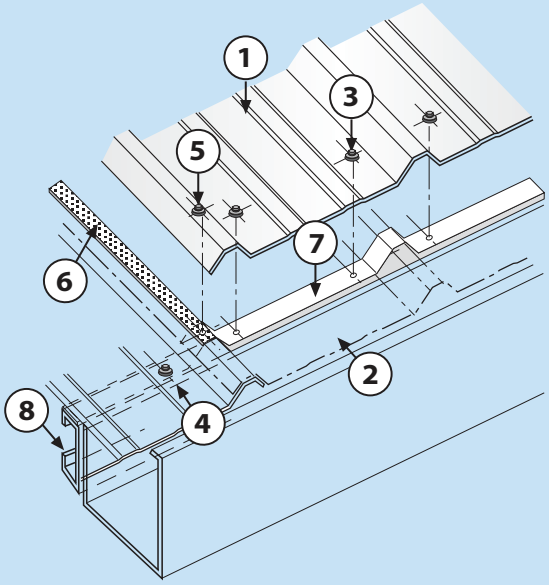


Bottom Edge SunSky Installation with Profiled Closure Strip
Figure 22

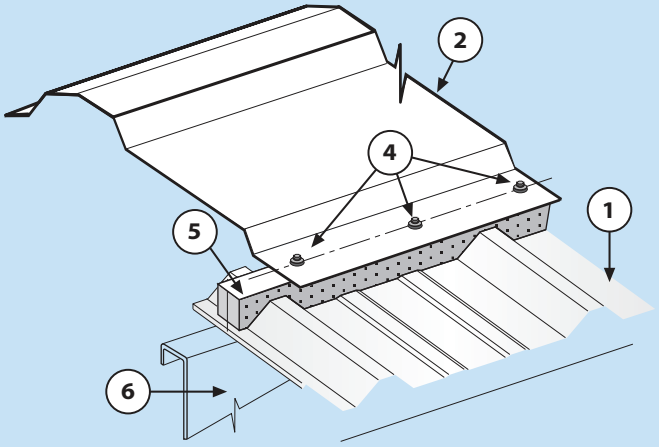


SunSky Ridge Cap Fastening

Figure 23a

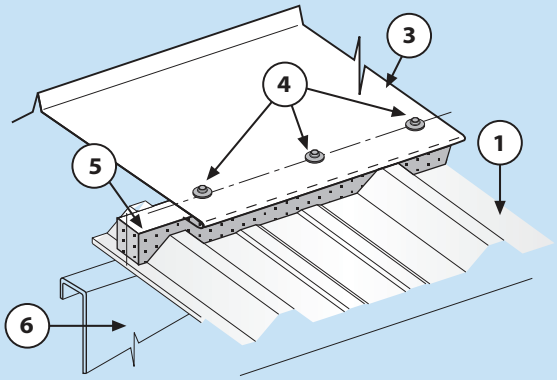


Sheet-Metal
Ridge Cap Fastening

Figure 24a

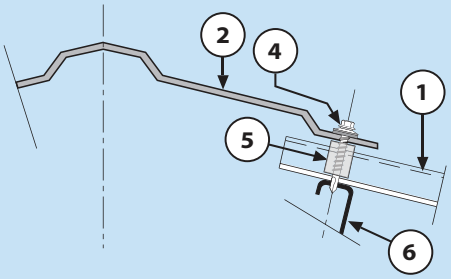


SunSky Ridge Cap Fastening
& Top Partial Section

Figure 23b

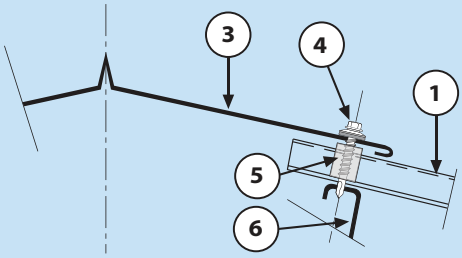


Sheet-Metal Ridge Cap Fastening
& Top Partial Section

Figure 24b

**Legend**

1. Representative SunSky panel
2. SunSky Universal Ridge Cap
3. Sheet-metal universal ridge cap (typical)
4. Crest fastener (side-lap) with Palram 3/4" special washer & gasket
5. Shaped Foam Closure (fits topside of panel)
6. Supporting purlin

Important notes about installation of SunSky Ridge Caps

1. Do not over tighten screws when installing. If ridge cap deforms, screws are too tight.
2. Use recommended fasteners as shown on page 8, Table 2.
3. When installing clear ridge caps on wood purlins, purlins should be painted with white acrylic-based paint prior to installation. This will help prevent overheating and possible charring of the purlins.

## M. Options for Installation:

1. **Single width, single span installation** (on 2 edge support purlins), integrated and surrounded by matching metal panels, overlapped on top, overlapping and supported on both sides and at the bottom. This dictates that the top metal panel is also installed with its edge corrugations overlapping at both sides, up to the roof edge or ridge.

### Legend

**Connections**

- (A) Right side-lap: metal panel overlaps SunSky panel
- (B) Left side-lap: SunSky panel overlaps metal panel
- (C) Top end-lap: top metal panel laps over top edge of SunSky panel
- (D) Bottom end-lap: bottom edge of SunSky panel laps over top edge of metal panel
- (E) Bottom edge detail: SunSky panel at the bottom edge of a roof, with or without a gutter

**Components**

- (1) Representative SunSky panel
- (2) Metal panel
- (3) SunSky valley fastener, with Palram 3/4" special washer gasket
- (4) Typical sheet-metal crest or valley fastener with 3/4" washer & gasket
- (5) SunSky crest (side-lap) fastener with Palram 3/4" special washer & gasket
- (6) SunSky side-lap stitching fastener
- (7) Foam closure (underside shape)
- (8) Supporting purlin
- (9) Main supporting truss / beam
- (10) Optional drainage gutter

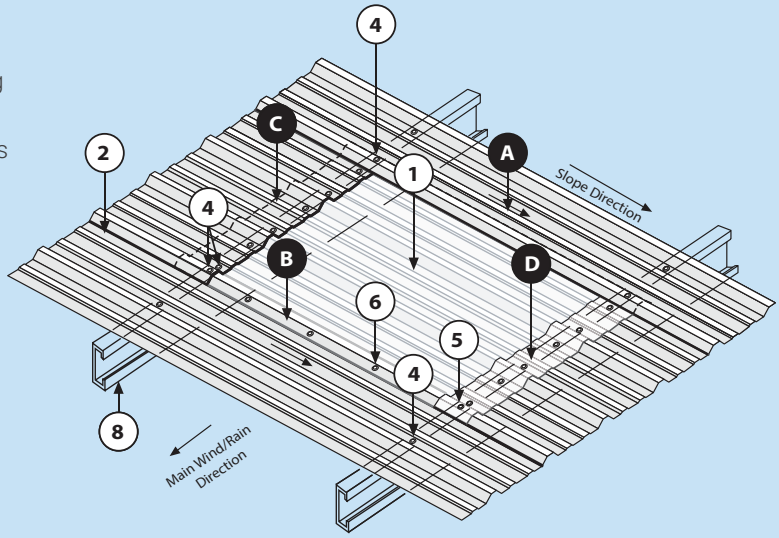


Typical, Single Panel, Single Span Mid-Field Detail
Figure 25

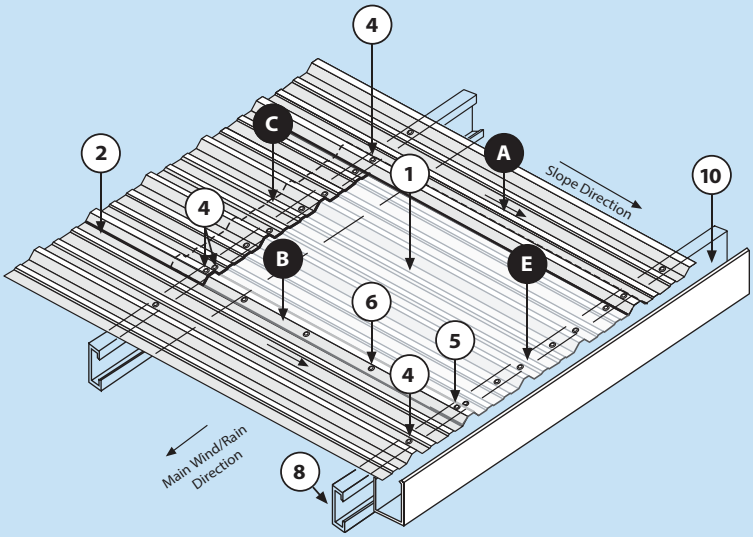


Typical Bottom End
SunSky Detail (with or without gutter)
Figure 26

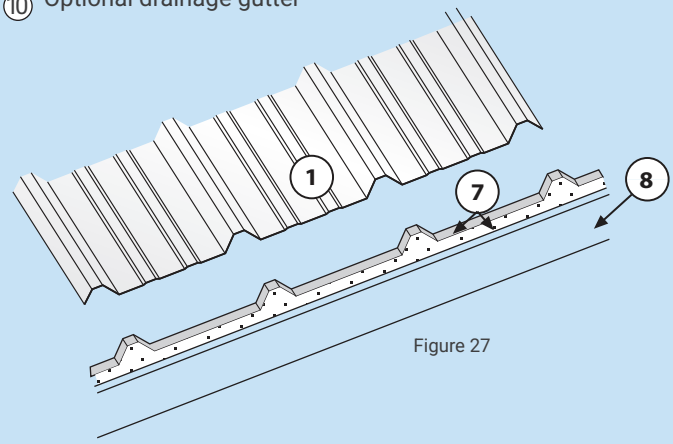


Figure 27

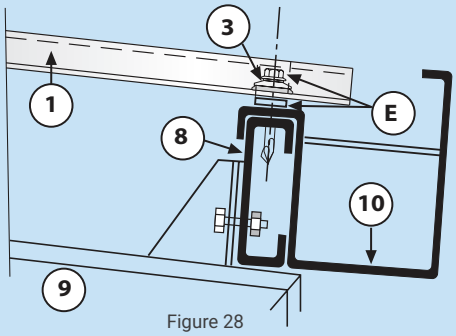


Figure 28

2. **Single width, multi-span installation**, on a few support purlins, using one single long panel or a few consecutive ones, overlapping each other (See Single-Panel Runs, page 7, fig. 9).

   This option can be implemented by two possible alternatives:

   - Installed mid-field, surrounded by matching metal panels, overlapped on top, overlapping both sides & bottom.
   - Installed from top to bottom or from ridge to bottom (one or two way pitched roof). This alternative enables the use of SunSky panels on metal roofs with profiles that don't exactly match.

   Both alternatives allow SunSky panels installation on top of outermost length corrugations of metal panels on both sides, for tougher, stiffer installation with better sealing, enabling easy installation of the SunSky skylight panels after the metal roofing is already in place (proper clearance must be provided for).

3. **A multi-width, multi-span installation** (See Multi-Panel Runs, page 7, fig. 10).
   This can be implemented the same way as the two alternatives mentioned above, either as an integrated part of a roof plane, or as an independent roof, its edges overlapping the metal panels on its two sides.

4. When installing SunSky on glass fiber mats insulated steel roof, be sure to use a suitable spacer along the purlins and avoid any contact between the vinyl finish of the mats and the SunSky panels (fig. 29, 30).

**Legend**

① Representative SunSky single / single-run multi-run skylight panel, overlapping lengthwise on both sides

② Typical metal panel installed on all sides

③ SunSky valley fastener, with Palram 3/4" special washer & attached EPDM conical washer

④ Typical sheet-metal crest or valley fastener with 3/4" washer & gasket

⑤ SunSky crest (side-lap) fastener with Palram 3/4" special washer & gasket

⑥ SunSky side-lap stitching fastener

⑦ Butyl-rubber sealing strip installed along width & length end corrugations at all overlap.

⑧ Height equalizing shim - wood or rigid plastic bar of suitable thickness compensating for the thickness of the insulation mat at the purlins

⑨ Supporting steel purlin

⑩ Main supporting structure

⑪ Galvanized sheet-metal strip for insulation mat support

⑫ Glassfiber or rockwool insulation mat underneath the steel roofing with reinforced aluminum foil or vinyl film bottom finish, supported by the metal strips

⑬ End of insulation mat at the lower edge of the skylight with the mat edge tucked back and under metal to create a nice edge finish

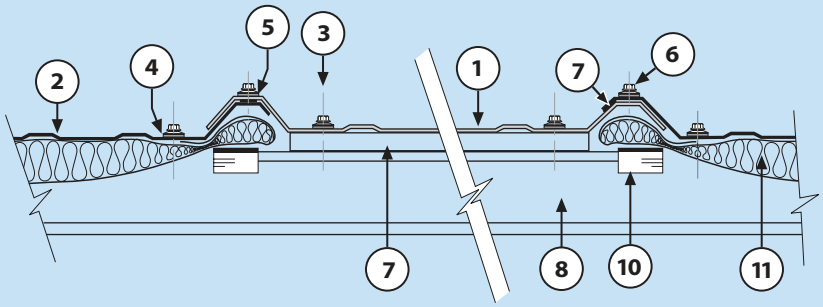


Width Cross-Section Detail
Figure 29

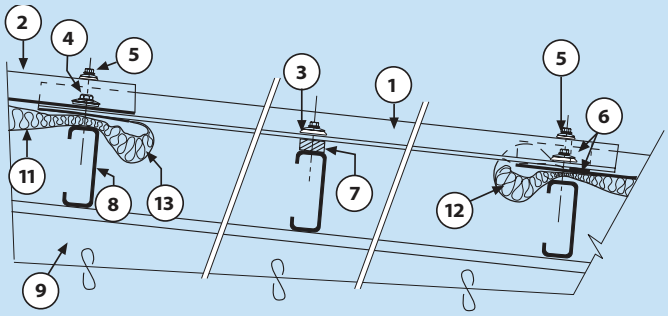


Length Section Detail
Figure 30

⑭ Same as ⑬ but at the upper edge of the skylight, and at vertical edges. **Caution:** The vinyl used on insulation make be incompatible with SunSky. Insert a separative layer between the SunSky sheet and the tucked-back vinyl-covered insulation to prevent potential out-gassing damage to the SunSky panel.

**5. Installing SunSky Side Lights on Exterior Walls:** When installing, fastening and sealing side lights, follow the same general procedures for roof installation as described on the preceding pages.

Certain installation methods are specific to siding installation, like the framed Side Light.

Typical Side Light Applications:

- A Multi-panel, single-span
- B Single-panel, multi-span
- C Multi-panel, multi-span
- D Single-panel, single-span (Figure 11)
- E Framed Side Light (Independent of surrounding cladding type)

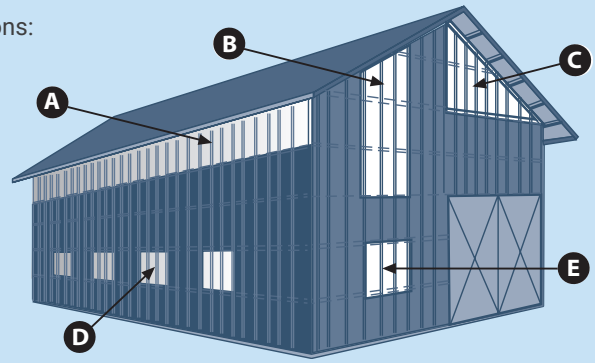


Typical Side Light Applications
Figure 31

**Framed Side Light Details**

1. Side Light panel
2. Surrounding cladding
3. Top & bottom valley fasteners
4. Mid-field fasteners
5. Side light framing (a.k.a. Z or H channel)
6. Wood/steel main frame

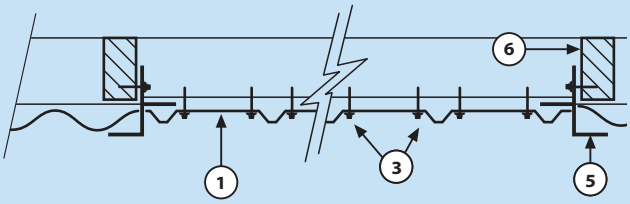


Framed Side Light
Horizontal Section
Figure 32

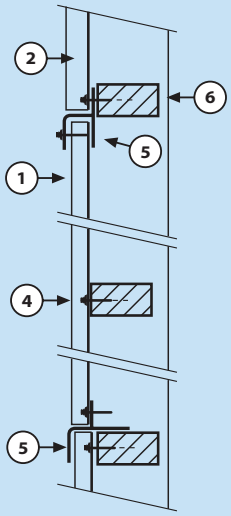


Typical Side Light
Vertical Section
Figure 33

**Integrated Side Light Details**

1. SunSky side light panel
2. Metal panel
3. SunSky valley fastener
4. Sheet-metal fastener
5. SunSky crest fastener
6. Side lite metal or wood length support
7. Wall girt
8. Roof-edge Z purlin
9. Eave-strut
10. Main supporting frame
11. Structural corner profile
12. Sheet-metal corner trim
13. Shaped foam closure (underside shape)

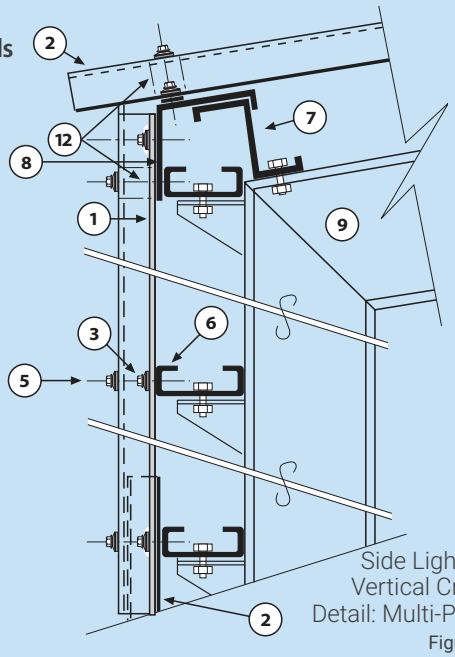


Side Light Fastening
Vertical Cross-Section
Detail: Multi-Panel Run Option
Figure 34

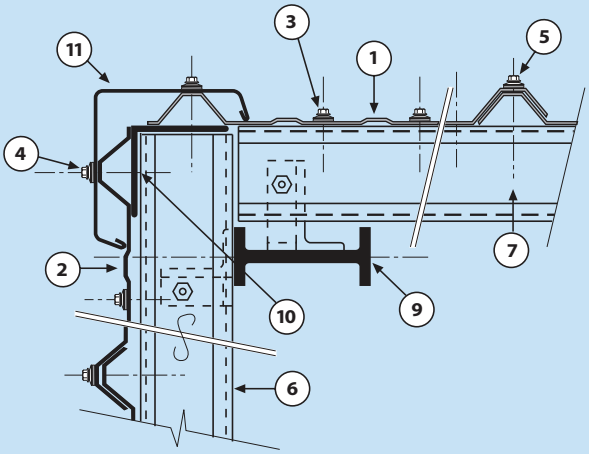


Side Light Corner Fastening
Horizontal Cross-Section
Detail: Multi-Panel Run Option
Figure 35

## N. Important Installation Comments:

1. **Avoid over-tightening the fasteners.** Allow gaskets to squeeze slightly until full contact with panel. Over tightening induces undue internal stresses, leading to premature failure. Regular Washer / Gaskets (Tek Screws) for metal panels apply excessive pressure, are inadequate for SunSky sealing, and cause undue internal stresses in the panel. The stresses result in crazing, fractures, and eventual failure.
2. **Never use** soft PVC (vinyl) washer / gaskets. Soft PVC is totally incompatible to polycarbonate and will harm the panel.
3. **Never apply** paints, shading compounds, paint thinners or any material that may chemically attack SunSky, without first verifying compatibility to polycarbonate with the manufacturer of the material in question.
4. **Always work safely.** Follow safety recommendations in the Installation Instructions.
5. **Maximum span:** Net spans should not exceed 5' to avoid buckling due to thermal expansion. Reference profile specific technical addendums on page 2.
6. **Fastening:** Always use recommended fasteners (Table 2, Page 8) for securing Sunsky. Never install SunSky by nailing.
7. **Isolating SunSky from harm:** When placing SunSky on asphalt shingles, soft PVC or vinyl, or other incompatible materials, use an isolating barrier, metal or wooden strips, EPDM rubber patch etc., between the panel and a material of questionable compatibility.
8. **Extra Fastening:** On length runs, where SunSky overlaps metal panels on both sides, we recommend side stitching fasteners beside the main fasteners connecting the SunSky to the frame. These should be spaced along the side-laps about 12-16" apart.
9. **End-Lap Support:** SunSky / metal or SunSky / SunSky panel end-lap should always be fully supported, to avoid deflection at that area. This also applies to ridge-cap/SunSky end-lap.
10. **Support Profiles:** At SunSky / SunSky or metal / SunSky side-lap (length overlap), metal or wood length support bars can be added under the side-lap to minimize deflection, assisting in sealing & stitching. The length support bars should be sized to suit the corrugations.
11. **Silicone Sealant:** Please check with manufacturer of any sealant to insure compatibility with polycarbonate. Incompatible sealants will void warranty.
12. **Butyl-Rubber Seals:** Side-laps and End-laps of any SunSky profile should be treated with butyl-rubber or expanding tape, placed between the overlapping panels at all edges. In shallow pitch roofs (less than 5 percent) double (parallel) sealing strips are recommended at end-laps. Please check with manufacturer of any butyl rubber or sealant tape to insure compatibility with polycarbonate. Incompatible butyl or sealant tape will void warranty.
13. **Shaped Foam Closures:** Expanded foam polyethylene (XPE) closure strips are used to seal the space between the upper or lower SunSky profile to edge purlins or ridge caps. Matching XPE top & bottom strips are available for each major SunSky profile. The strip is held in place by the screws fixing the panel to the purlin. (see figures 23a, 23b, 24a, and 24b, on page 12 and figure 28 on page 13).
14. **When installing clear SunSky,** it is advisable to paint purlins using white acrylic paint, or to cover with aluminum tape, in order to prevent over-heating and / or charring of the purlins.

14. **Cleaning:** Most normal dirt & dust accumulation is washed off by periodic rains. Regular hosing of the panels with clean lukewarm water is sufficient in dry areas.

    In polluted, oily environments, mild household detergent may be used, assisted by a soft rag or soft-bristled brush. **Never use aggressive or abrasive cleaning agents or glass window cleaners.** They may scratch or chemically attack the panel. Large areas can be washed by high-pressure water-jet, optionally, in conjunction with diluted detergent. Dry with soft cotton rags to avoid spotting.

15. **Repair:** Minor damages to the panel may be repaired. Small punctures can be stopped by dabs of approved silicone sealant. Larger tears may be patched by pieces of matching panel, bonded & sealed on top of the tear with compatible structural silicone.

16. **Study and Preparation:** Prior to actual installation study the SunSky Installation Guide carefully. Make sure all the instructions are understood and all required materials, accessories and tools are available.

17. **Information:** Please contact Palram or its distributor regarding any applications, requests and inquiries you may have before starting installation.

18. **Accessories Information & Supply:**
    Palram Americas and its distributors will assist, advise and supply, upon request, various additional accessories that may be required for appropriate installation, such as butyl-rubber or expanding sealing tape, special fasteners and washer / gaskets, etc.

## O. Thermal Expansion Table for SunSky Corrugated Polycarbonate

Palram recommends that Sunsky panels are not installed below 40˚F or above 80˚F. See Page 9, Section 5a, for important notes about pre-drilling panels with oversize holes to accommodate expansion and contraction of panels.

Table 3 Thermal Expansion Data

| Panel Length | | ΔL (Inches) where ΔT = | | | | |
|---|---|---|---|---|---|---|
| Ft | Inches | 20°F | 40°F | 60°F | 80°F | 100°F |
| 8 | 96 | 0.071 | 0.142 | 0.213 | 0.284 | 0.355 |
| 10 | 120 | 0.089 | 0.178 | 0.266 | 0.355 | 0.444 |
| 12 | 144 | 0.107 | 0.213 | 0.320 | 0.426 | 0.533 |
| 16 | 192 | 0.142 | 0.284 | 0.426 | 0.568 | 0.710 |
| 24 | 288 | 0.213 | 0.426 | 0.639 | 0.852 | 1.066 |

Palram Americas reserves the right to change product specifications and/or information contained in this brochure without notice.

**PALRAM AMERICAS**
9735 Commerce Circle, Kutztown, PA, 19530 USA
800.999.9459 ▪ ContactUs.USA@palram.com
palram.com/us

ICC EVAL. ESR-1893

Inasmuch as Palram Americas has no control over the use (and/or installation method) to which others may put this material, it does not guarantee that the same results as those described herein will be obtained. Each user of the material should make their own test to determine the suitability of the material for their own particular use. In the event of a warranty claim for product failure, Palram Americas reserves the right to inspect any or all of the sheets involved and the installation site itself while the sheets are still in their original position and have not been removed or moved or altered in any way.
©2025 Palram Americas

F505 122025 RP