16778-NG

STOP

DO NOT RETURN TO THE STORE!

If you discover missing or damaged parts,
or if you have questions about the building process,
please reach out to us directly for the fastest service.

24/7 Support

help.backyardproducts.com

- Answers to frequently asked questions
- Technical assistance and how-to videos
- Submit a help request
- Request replacement parts

Business Hours

(734) 242-6900

Monday - Friday ..... 8:00am - 6:00pm EST
Saturday - Sunday .....Closed

INSTALLERS WANTED

Did you enjoy building your shed?

JOIN OUR TEAM

AND MAKE UP TO $1,500/WEEK*

Call a Recruiter Today! 734-365-7000

Flexible schedule

No selling, just building

Bonus incentives available

Scan the flowcode to apply today. or visit backyardinstaller.com

SCAN ME

*based on number of completed installations

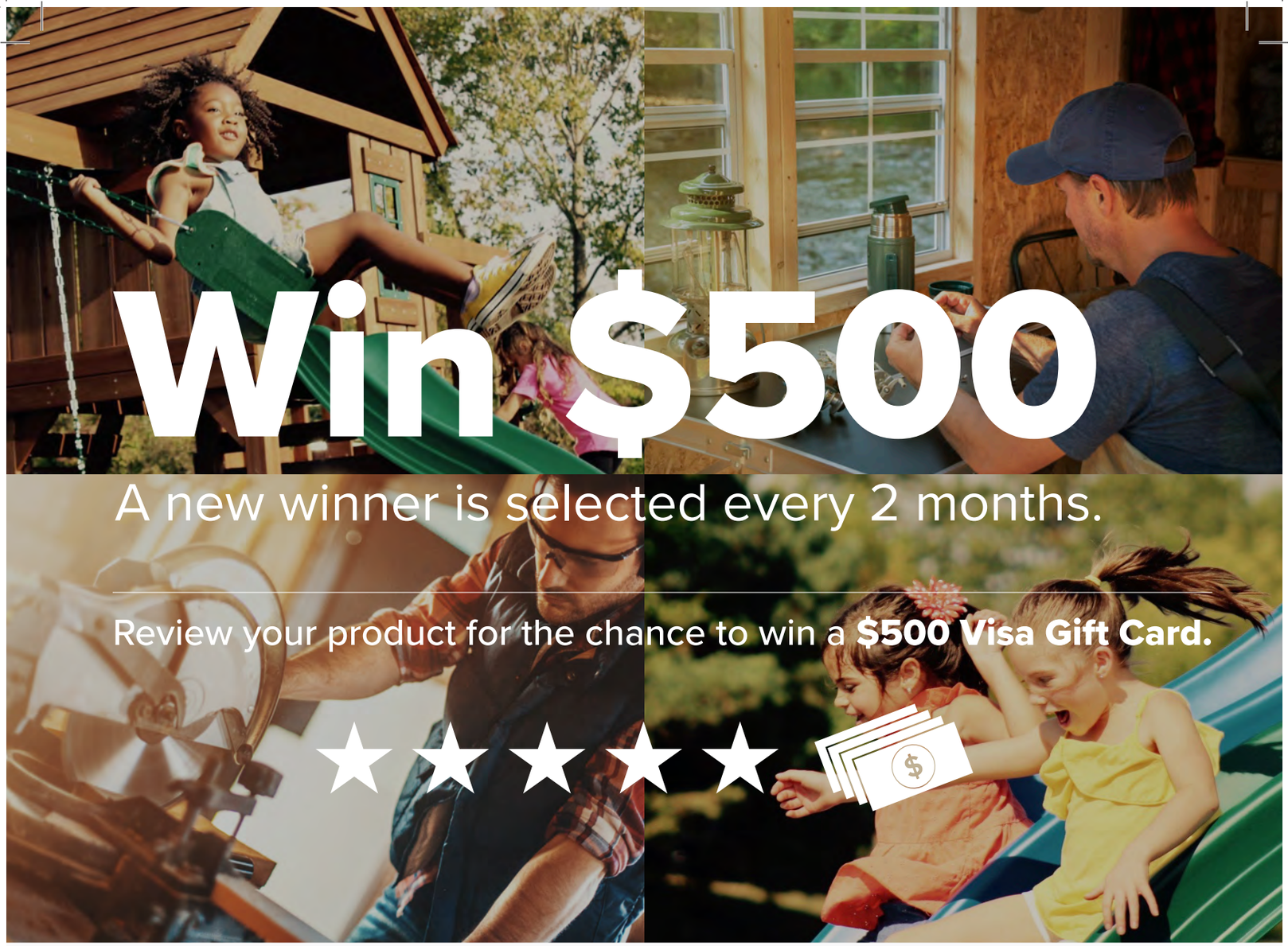

Win $500

A new winner is selected every 2 months.

Review your product for the chance to win a **$500 Visa Gift Card.**

How to Enter:



Open camera.
Aim. Tap.

SCAN ME

or visit backyardreviews.net

1 **Scan**
QR code above.

2 **Click**
'write a review'

3 **Find your product.**
Tell us what you think.

4 **Submit your review.**
You'll be notified by e-mail if you've won the $500 gift card.

Write a Backyard Products, LLC. product review at backyardreviews.net for a chance to win a $500 Visa gift card. No purchase necessary to enter. Must be legal U.S. resident (including DC & Puerto Rico), 18 or older to participate. Taxes on prize are responsibility of winner. Odds of winning depend on the number of eligible reviews received. Void where prohibited. For complete details and official rules, visit https://backyardreviews.net/sweepstakes-rules.

HEARTLAND

VALUE SERIES

16778-NG | 09/19/2023

ASSEMBLY MANUAL

GENTRY GABLE 12' x 12' (365,8 x 365,8 cm)

ACTUAL FLOOR SIZE: 12' x 12' (365,8 x 365,8 cm)

KEEP THIS MANUAL FOR FUTURE REFERENCE

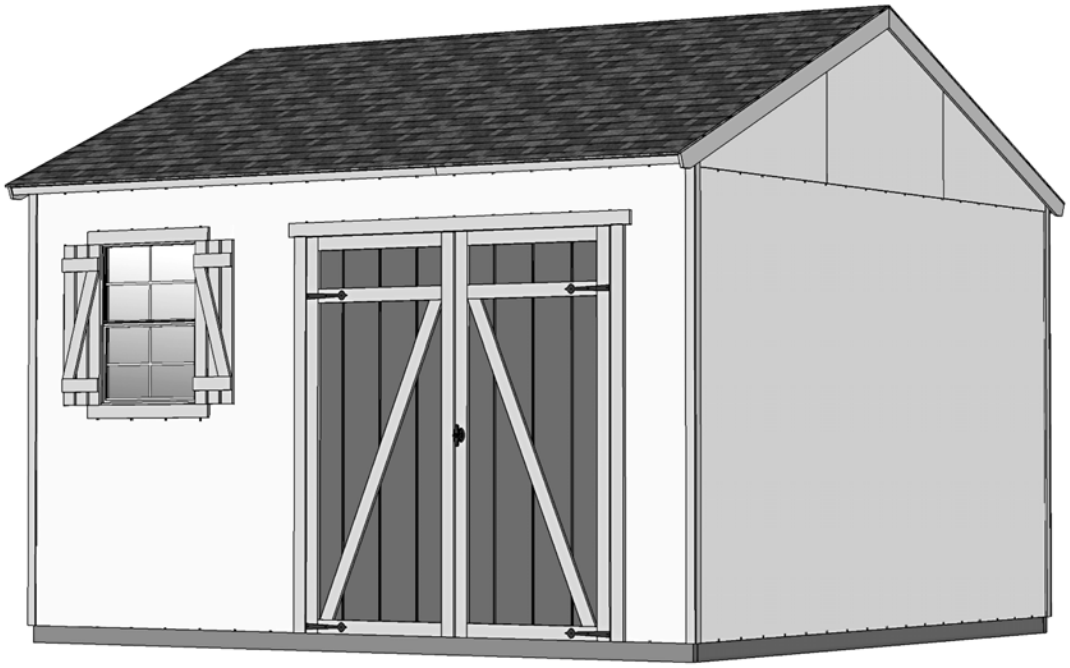

⚠ *IMPORTANT!* ⚠

READ INSTRUCTIONS THOROUGHLY PRIOR TO BEGINNING ASSEMBLY.

BEFORE YOU BEGIN

- **BUILDING RESTRICTIONS AND APPROVALS**

  Be sure to check local building department and homeowners association for specific restrictions and/ or requirements before building.

- **ENGINEERED DRAWINGS**

  Contact our Customer Service Team if engineered drawings are needed to pull local permits.

- **SURFACE PREPARATION**

  To ensure proper assembly you must build your shed on a level surface.

  Recommended methods and materials to level your shed are listed on page 7.

- **CHECK ALL PARTS**

  Inventory all parts listed on pages 4-6.

- **ADDITIONAL MATERIALS**

  You will need additional materials to complete your shed. See page 3 for required and optional materials and quantities.

******CONTACT OUR CUSTOMER SERVICE TEAM***

IF ANY PARTS ARE MISSING OR DAMAGED***

- Order form and warranty at back of manual -

Call: 1-734-242-6900 email: customerservice@backyardproducts.com

TOOLS

Required

- ❑ Phillips Screwdriver
- ❑ Drill / Driver
  - ❑ 3/8" Drill Bit
  - ❑ #2 Philips Drive Bit
- ❑ Hammer
- ❑ Level
- ❑ Pencil
- ❑ Tape Measure
- ❑ Square or
- ❑ Utility Knife
  - ❑ Shingle Blades
- ❑ Caulk Gun
- ❑ Paint Tools
- ❑ Safety Glasses
- ❑ Ladder

Optional

- ❑ Tool Belt/ Nail Pouch
- ❑ Tin Snips (for drip edge)
- ❑ Chalk Line
- ❑ Nail Gun
  - • gun nails
- ❑ Gloves
- ❑ Sawsall

Safety! Always use approved safety glasses during assembly.

HELPFUL REMINDER SYMBOLS

Look for these symbols for helpful reminders throughout this manual.

= Assistance Required; two or more people.

= Ensure squareness.

= Important required step or operation.

= Helpful assembly hint.

= Mark part with pencil.

BEGIN = Beginning of steps for assembly or installation.

FINISH = You have finished the assembly or installation.

= Level

ORIENT LUMBER AND TRIM FOR BEST APPEARANCE

Framing lumber is graded for structural strength and not appearance. Exterior trim is graded for one good side.

Always install the material leaving the best edge and best surface visible. Please remember that these blemishes in no way negatively affect the strength or integrity of our product. (See Fig. A, B, C.)

A

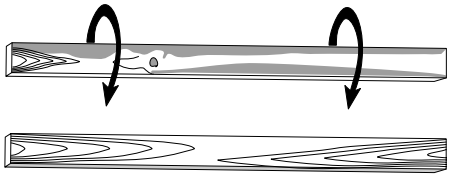

B

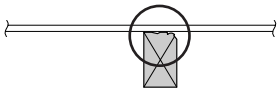

C

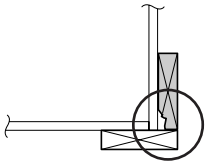

ADDITIONAL MATERIALS

FOUNDATION OR FLOOR MATERIALS

- If you purchased a separate floor kit, use instructions and materials in that kit to construct your floor.
- See the FLOOR LEVELING section on page 11 for recommended methods and suggested materials to properly level your floor, as this will vary depending on your specific site.
- If you will be building your own floor, below are the materials that you'll need.

WOOD FLOOR FRAME (Not Included)

MATERIAL REQUIRED: ⚠ Use only wood treated for ground contact and fasteners approved for use with treated wood.

☐ **x2** 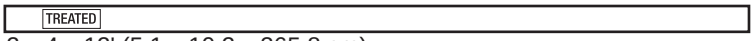

2 x 4 x 12' (5,1 x 10,2 x 365,8 cm)

☐ **x10** 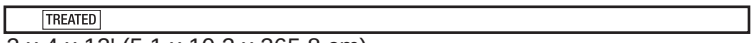

2 x 4 x 12' (5,1 x 10,2 x 365,8 cm)
cut to 2 x 4 x 141" (5,1 x 10,2 x 358,1 cm)

☐ **x40** 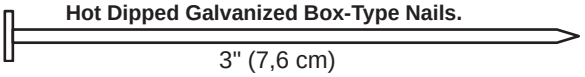

3" (7,6 cm)

REINFORCED WOOD FLOOR FRAME (OPTIONAL)

IMPORTANT! Depending on your specific use you may want to construct a heavy duty floor frame by adding additional floor joists (shown below as shaded). Below is a list of additional materials (not included):

☐ **x3** 2 x 4 x 12' (5,1 x 10,2 x 365,8 cm) Treated Lumber cut to 2 x 4 x 141" (5,1 x 10,2 x 358,1 cm)

☐ **x12** 3" (7,6 cm) hot-dipped galvanized nails

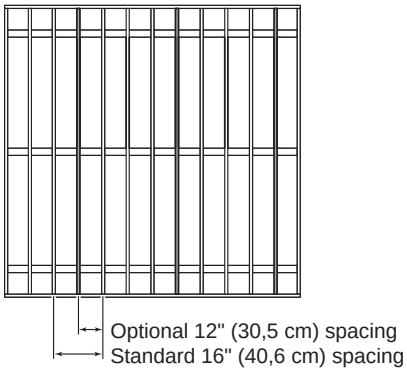

ADDITIONAL MATERIALS

COMPLETING YOUR SHED

You will need these additional materials:

- ☐ **3-TAB SHINGLES (Bundles)..... 7**
- ☐ **PAINT FOR SIDING (Gallons)..... 3**
  Use 100% acrylic latex exterior paint.
  (2) coats recommended.
- ☐ **1" GALVANIZED ROOFING NAILS(lbs)... 4**
  For shingles.
- ☐ **PAINT FOR TRIM .....1 Quart**
  Use 100% acrylic latex exterior paint.
- ☐ **CAULK ..... 4 Tubes**
  Use acrylic latex exterior caulk that is paintable.

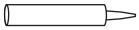

OPTIONAL MATERIALS

- ☐ **DRIP EDGE (Feet)..... 60**
- ☐ **#15 ROOFING FELT (Sq ft. to cover)..... 198**
- ☐ **1" GALVANIZED ROOFING NAILS (lbs).... ½**
  For roofing felt.

REFER TO THE BACK OF THIS MANUAL AND THE MANUFACTURER'S INSTRUCTIONS FOR INSTALLATION OF SHINGLES, DRIP EDGE AND FELT.

PARTS IDENTIFICATION AND SIZES

Double letter part identification is stamped on some parts.

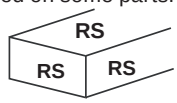

• Check these locations for part stamp.

WOOD SIZE CONVERSION CHART

Nominal Board Size	Actual Size
2 x 4	1-1/2" x 3-1/2" (3,8 x 8,9 cm)
1 x 4	3/4" x 3-1/2" (1,9 x 8,9 cm)
2 x 3	1-1/2" x 2-1/2" (3,8 x 6,3 cm)
1 x 3	3/4" x 2-1/2" (3,8 x 6,3 cm)

INVENTORY YOUR PARTS before you begin. We suggest sorting parts by the category they are listed in.

WALL

☐	x5	AL	2 x 4 x 7" (5,1 x 10,2 x 17,8 cm)
☐	x1	BG	2 x 4 x 11-5/8" (5,1 x 10,2 x 29,5 cm)
☐	x1	AJ	2 x 4 x 12-1/2" (5,1 x 10,2 x 31,8 cm)
☐	x4	AF	2 x 4 x 18-1/8" (5,1 x 10,2 x 46 cm)
☐	x1	SG	2 x 4 x 34" (5,1 x 10,2 x 86,4 cm)
☐	x3	HVC	2 x 4 x 44-3/8" (5,1 x 10,2 x 112,7 cm)
☐	x6	SP	2 x 4 x 48" (5,1 x 10,2 x 121,9 cm)
☐	x1	AV	2 x 4 x 60-1/2" (5,1 x 10,2 x 153,7 cm)
☐	x1		7/16 x 3-1/4 x 66-3/4" (1 x 8,3 x 169,5 cm) *OSB*
☐	x2	AM	2 x 4 x 67" (5,1 x 10,2 x 170,2 cm)
☐	x2	UM	2 x 4 x 68" (5,1 x 10,2 x 172,7 cm)
☐	x4	YFA	2 x 4 x 68-1/2" (5,1 x 10,2 x 174 cm)
☐	x24	AI	2 x 4 x 78-1/2" (5,1 x 10,2 x 199,4 cm)
☐	x3	TJ	2 x 4 x 92-5/8" (5,1 x 10,2 x 235,3 cm)
☐	x7	TP	2 x 4 x 96" (5,1 x 10,2 x 243,9 cm)

RAFTERS

☐	x1	GAA	1 x 3 x 5" (2,5 x 7,6 x 12,7 cm) **USED AS A GAUGE BLOCK FOR 3/4" (1,9 cm) MEASUREMENT**
☐	x12		6 x 24" (15,2 x 61 cm)
☐	x14	ADA	2 x 4 x 77-15/16" (5,1 x 10,2 x 165,1 cm)

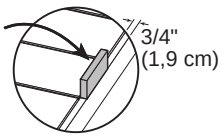

TRIM

☐	x2	AS	2 x 6 x 49-1/2" (5,1 x 15,2 x 125,8 cm)
☐	x1	ZJ	19/32" x 2-1/2" x 72" (1,5 x 6,3 x 182,9 cm)
☐	x8		3/8" x 1-3/4" x 83-1/2" (1 x 4,5 x 212,1 cm)
☐	x2	CQL	19/32" x 3-1/2" x 84-15/16" (1,5 x 8,9 x 215,7 cm)
☐	x2	CQR	19/32" x 3-1/2" x 84-15/16" (1,5 x 8,9 x 215,7 cm)
☐	x2	VX	2 x 6 x 96" (5,1 x 15,3 x 243,9 cm)

DOOR

☐	x2	AH	19/32" x 2-1/2" x 26-5/8" (1,5 x 6,3 x 67,7 cm)
☐	x1	AHR	19/32" x 2-1/2" x 62" (1,5 x 6,3 x 157,5 cm)
☐	x1	AHL	19/32" x 2-1/2" x 62" (1,5 x 6,3 x 157,5 cm)
☐	x2	OO	69" (175,3) Door Stiffener

PARTS IDENTIFICATION AND SIZES

LOFT / BENCH / SHELF

☐	x4	TP	2 x 4 x 96" (5,1 x 10,2 x 243,8 cm)
☐	x2	KP	1 x 4 x 96" (2,5 x 10,2 x 243,8 cm)
☐	x2	BE	1 x 3 x 96" (2,5 x 7,6 x 243,8 cm)
☐	x1	PT	2 x 3 x 96" (5,1 x 7,6 x 243,8 cm)
☐	x4	SP	2 x 4 x 48" (5,1 x 10,2 x 121,9 cm)
☐	x1	WJ	1 x 4 x 48" (2,5 x 10,2 x 121,9 cm)
☐	x2	FO	1 x 3 x 48" (2,5 x 7,6 x 121,9 cm)
☐	x1	NK	2 x 3 x 48" (5,1 x 7,6 x 121,9 cm)
☐	x1	HYA	1 x 4 x 44-1/2" (2,5 x 10,2 x 113 cm)
☐	x4	AO	2 x 4 x 22-1/2" (5,1 x 10,2 x 57,2 cm)
☐	x6		3/8" x 14-1/4 x 22-1/2" (1 x 36,2 x 57,2 cm)
☐	x1	PYA	2 x 4 x 19-3/4" (5,1 x 10,2 x 50,2 cm)
☐	x7	LR	2 x 3 x 19" (5,1 x 7,6 x 48,3 cm)
☐	x7	AC	2 x 3 x10" (5,1 x 7,6 x 25,4 cm)
☐	x6	AZ	19/32" x 3 x 30-1/8" (1,5 x 7,6 x 76,5 cm)

WINDOW

☐	x2	DT	19/32" x 3 x 28-1/8" (1,5 x 7,6 x 71,4 cm)
☐	x1	BWR	19/32" x 3 x 21" (1,5 x 7,6 x 53,3 cm)
☐	x1	BWL	19/32" x 3 x 21" (1,5 x 7,6 x 53,3 cm)
☐	x4	DF	19/32" x 3 x 8-1/2" (1,5 x 7,6 x 21,6 cm)

PANEL PARTS LIST

NOTE: Panel parts are not stamped with part identification

LOFT/BENCH/SHELF

☐	x1		7/16 x 36 x 96" (1,1 x 91,4 x 243,8 cm)
☐	x1	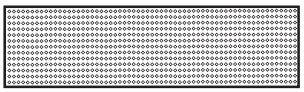	1/4 x 23-7/8 x 96" (0,6 x 60,6 x 243,8 cm) Peg board
☐	x1		7/16 x 11-1/2 x 96" (1,1 x 21,2 x 243,8 cm)
☐	x1	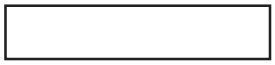	7/16 x 19-1/2 x 92-1/2" (1,1 x 49,5 x 235 cm)
☐	x1		7/16 x 36 x 40-7/8" (1,1 x 91,4 x 103,8 cm)
☐	x1	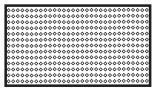	1/4 x 23-7/8 x 48" (0,6 x 60,6 x 121,9 cm) Peg board
☐	x1	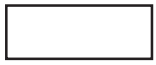	7/16 x 19-1/2 x 48" (1,1 x 49,5 x 121,9 cm)
☐	x1	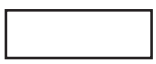	7/16 x 11-1/2 x 48" (1,1 x 21,3 x 121,9 cm)

ROOF

☐	x2		7/16 x 48 x 96" (1,1 x 121,9 x 243,8 cm)
☐	x2		7/16 x 36-1/2 x 96" (1,1 x 92,7 x 243,8 cm)
☐	x2	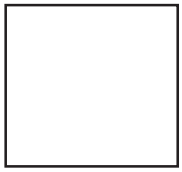	7/16 x 47-7/8 x 48" (1,1 x 121,6 x121,9 cm)
☐	x2		7/16 x 36-1/2 x 47-7/8" (1,1 x 92,7 x 121,6 cm)

PANEL & DOORS PARTS LIST

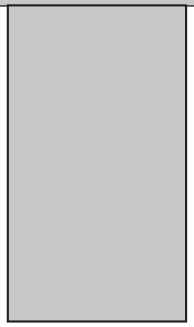

☐ **x9**
3/8 x 48 x 84"
(1 x 121,9 x 213,4 cm)

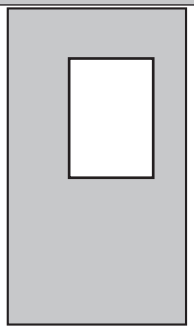

☐ **x1**
3/8 x 48 x 84"
(1 x 121,9 x 213,4 cm)

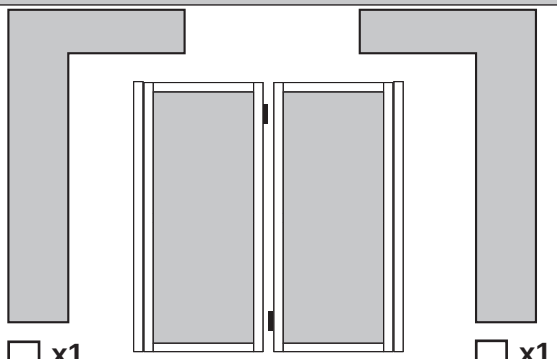

☐ **x1**

☐ **x1**

☐ **x1**

☐ **x1**

NOTE: Panel parts are not stamped with part identification.



☐ **x2**
3/8" x 23-9/16" x 48"
(1 x 59,9 x 121,9 cm)

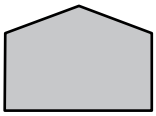

☐ **x2**
3/8" x 33-1/2" x 48"
(1 x 59,9 x 121,9 cm)



☐ **x2**
3/8" x 23-9/16" x 48"
(1 x 59,9 x 121,9 cm)

FASTENER/HARDWARE BAG (Shown Actual Size)

☐ **x120** 2" (5,1 cm)

☐ **x3** 1-1/2" (3,8 cm)

☐ **x91** 3" (7,6 cm)

☐ **x19** 2" (5,1 cm)

☐ **x84** 1-1/4" (3,2 cm)

☐ **x18** 1" (2,5 cm)

☐ **x92** 3/4" (1,9 cm)

NOTE:
If you are using a nail gun, nails may be used where screws are shown for quicker assembly. Length of nail must match screw length.

NAIL BOXES (Shown Actual Size)

☐ **x5 BOXES** 3" (7,6 cm)

☐ **x6 BOXES** 2" (5,1 cm)

Other HARDWARE (Not Actual Size)

☐ **x4**

☐ **x12** 3/4" (1,9 cm)

☐ **x11** 1/2" (1,3 cm)

☐ **x1**
64" Metal Threshold
3/4" (1,9 cm) x18
Bagged seperately / special coating

☐ **x1**

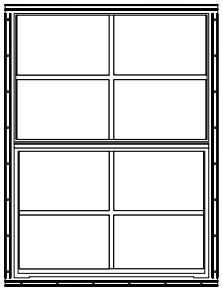

☐ **x1**

☐ **x2**
1-1/2" (3,8 cm)

☐ **x2**

☐ **x4**
3/4" (1,9 cm)

OPTIONAL WOOD FRAME FLOOR LEVELING OPTIONS

There are multiple ways to level your floor frame. Our recommended leveling method is shown below.
Leveling materials are not included in this kit.

PREFERRED METHOD - 4x4 TREATED RUNNERS (Typical for 12' x 12' Kit)

⚠ **FLOOR FRAME NOT INCLUDED**

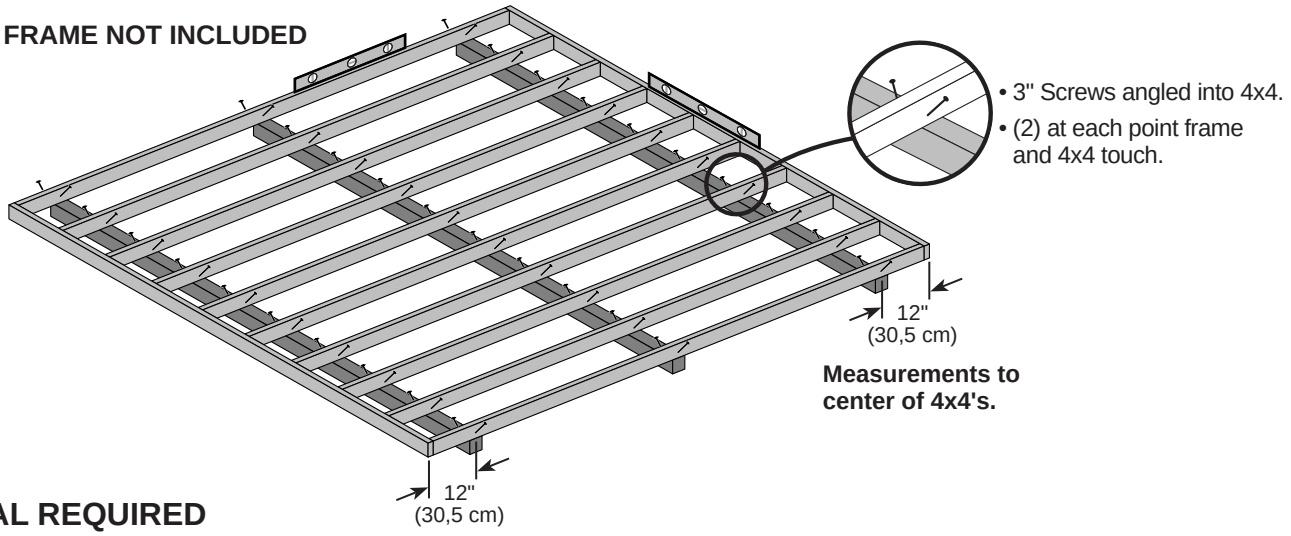

MATERIAL REQUIRED

☐ **x3** 4 x 4 x 12' (10 x 10 x 365,8 cm)Treated Lumber

☐ **Fasteners for securing frame to 4x4**
(3" Screws shown as one option.) Minimum (60) 3" screws / exterior grade.

⚠ **Use only wood treated for ground contact and fasteners approved for use with treated wood.**

⚠ **Always support frame seams.**

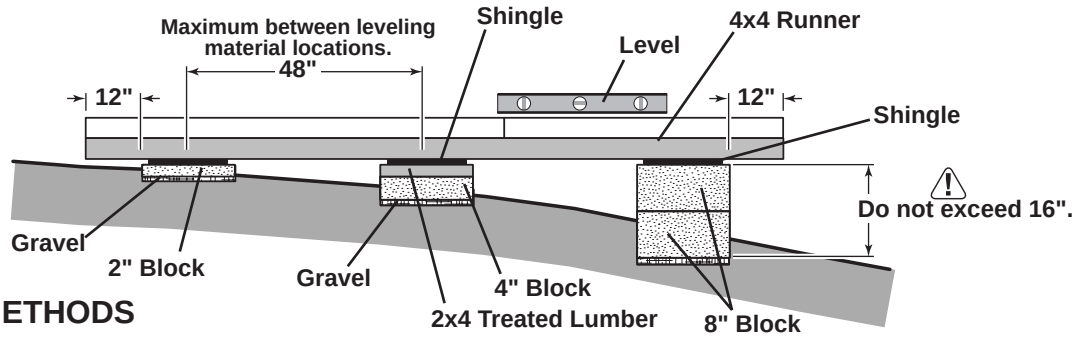

LEVELING METHODS

- Level under 4x4 runners only.
- Locate leveling material 12" from ends of runners and no more than 48" apart.
- Asphalt shingles should be used between 4x4 runners and blocks or treated lumber. Never use shingles in direct contact with ground.
- For best results and aiding in water drainage use gravel under each concrete block.

LEVELING MATERIALS

☐ **Gravel**

☐ **Solid Masonry Blocks in 1", 2", 4" or 8" thickness**

☐ **2x4 Treated Lumber**

☐ **Asphalt Shingles**

⚠ **Leveling higher than 16" not recommended.**

CONCRETE

- If you are building your shed on a concrete foundation see the following page.

CONCRETE FOUNDATION

If you choose to install your kit on a concrete slab refer to the diagram below.
Attach the sill plates on the foundaton as shown, and continue on to page 9.

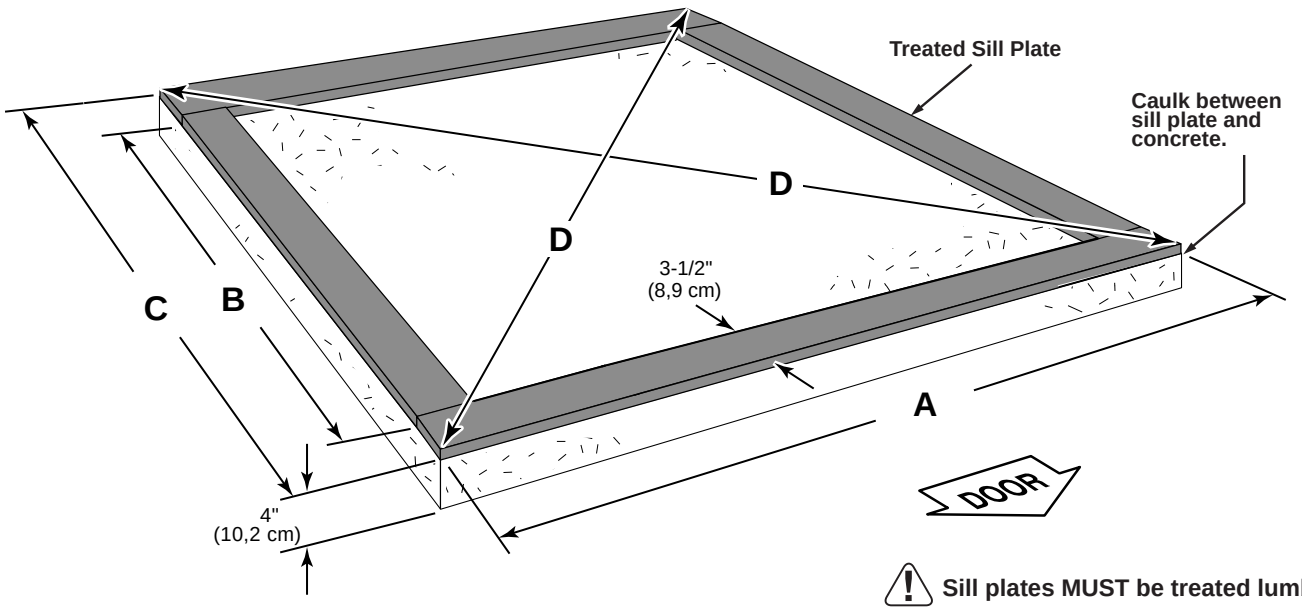

Sill plates MUST be treated lumber.

Building Size	Actual Floor Size	A	B	C	D
12' x 12' (365,8 x 365,8 cm)	12' x 11'-8-5/8" (365,8 x 357,2 cm)	144" (365,8 cm)	137" (348 cm)	144" (365,8 cm)	203-5/8" (517,2 cm)

12' x 12' Building Requires:

- ☐ **x4** **2 x 4 x 12' (5,1 x 10,2 x 365,8 cm)**
- ☐ **x1** **Caulk**

Allow new concrete slabs to cure for at least seven (7) days.

- **A treated 2 x 4 (5,1 x 10,2 cm) sill plate is required when installing your shed on concrete. Purchase full length treated lumber, or butt shorter pieces end-to-end and seal seams with caulk.**
- **Use a high quality exterior grade caulk beneath all sill plates.**
- **Fasten 2 x 4 (5,1 x 10,2 cm) sill plates to slab using approved concrete anchors (fasteners not included).**
- **Check local code for concrete foundation requirements.**

NOTES

FLOOR FRAME

PARTS REQUIRED:

Look for TREATED Stamp

x40 3" (7,6 cm)

x10 TREATED
2 x 4 x 141" (5,1 x 10,2 x 358,1 cm)

x2 TREATI
2 x 4 x 144" (5,1 x 10,2 x 365,8 cm)

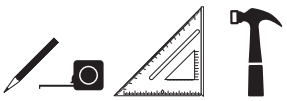

BEGIN

1 Arrange parts as shown on flat surface. Measure and mark.

Secure with (2) 3" nails at each mark.



HINT:
For easier nailing stand on frame.

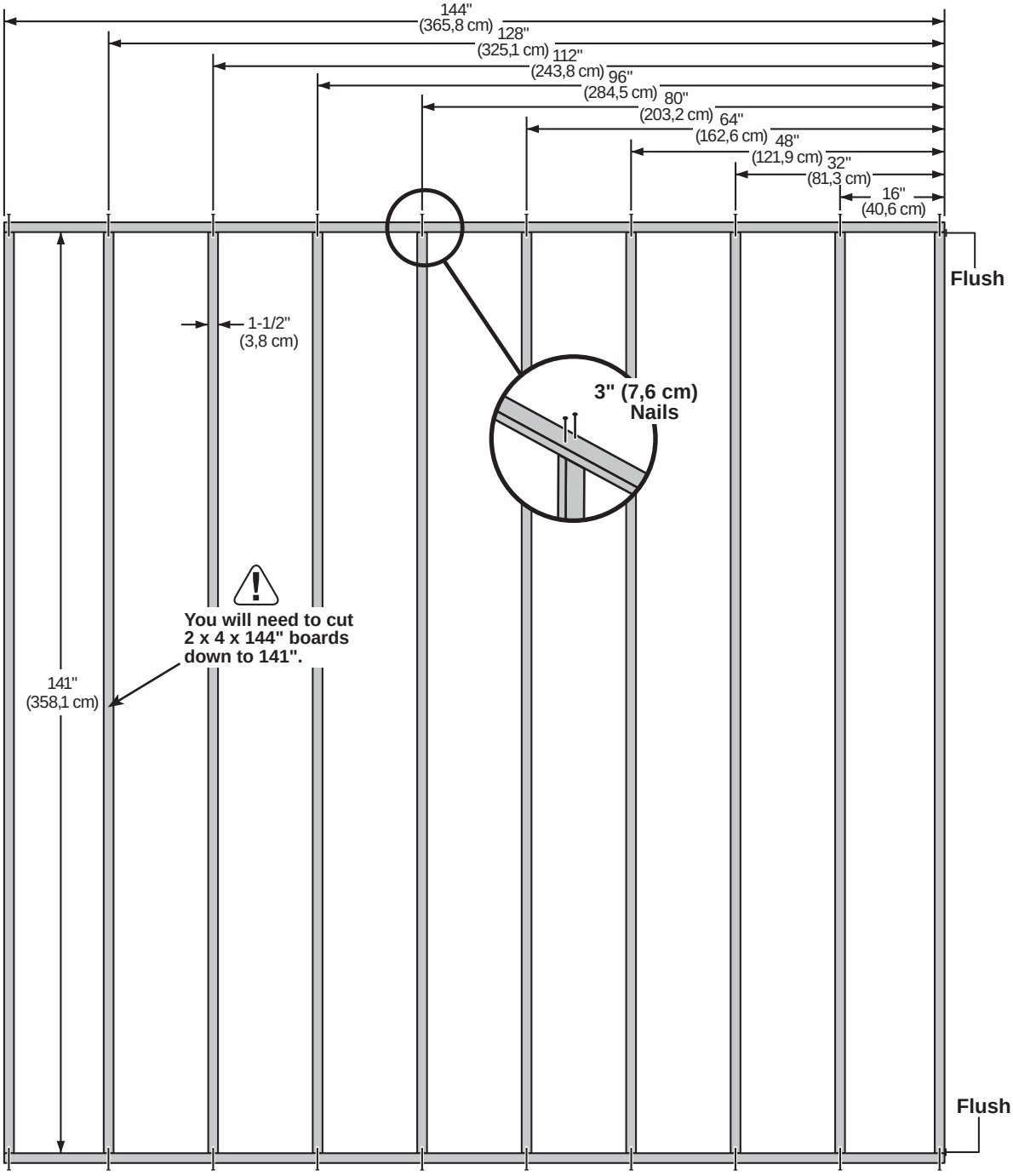

FINISH

Your floor frame is now assembled.

⚠ *LEVEL AND SQUARE FLOOR FRAME* ⚠

STOP!

Before attaching floor decking, it is important to level and square the floor frame.
A level and square floor frame is required to correctly construct your shed.

STOP!

BEGIN

1 ⚠ See page 7 for the preferred floor leveling method.

2 Use level and check the frame is level before applying floor panels.

3 Check for frame squareness by measuring diagonally across corners. If the measurements are the same, the frame is square. The diagonal measurement will be approximately 203-5/8" (517,2 cm).

4 When the frame is level and square secure one side of frame to the 4x4 runners using one fastener at ends of each runner. Move to the opposite end of the frame. Secure the frame to 4x4 runners with one fastener at ends of each runner making sure the frame remains square **(Fig. A)**.

First, secure at ends with one fastener.

Fig. A

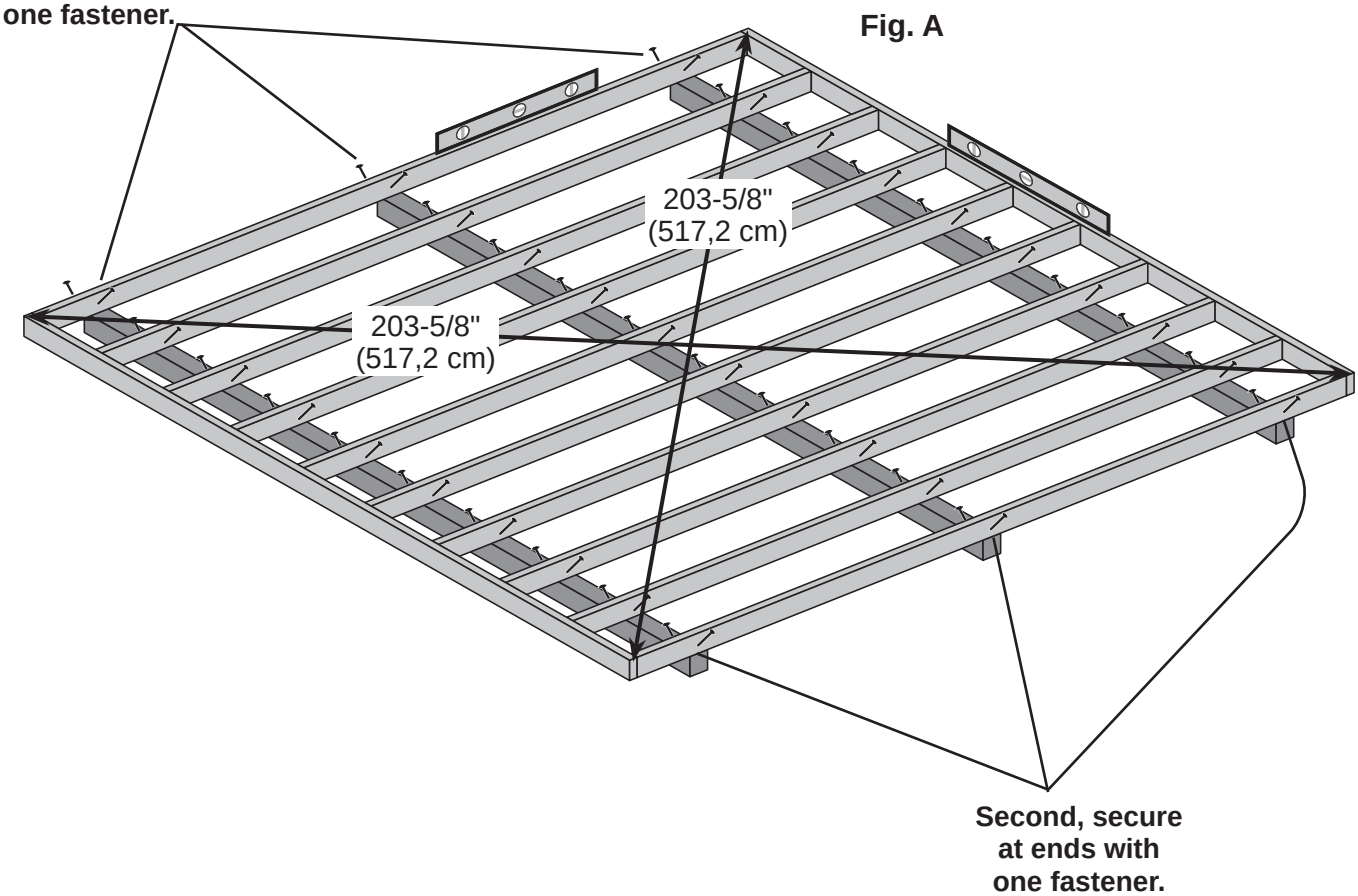

Second, secure at ends with one fastener.

FINISH

Once the floor frame is level and square, fasten the frame to the 4x4 runners at each point where the frame contacts the 4x4 runners.

FLOOR PANELS

PARTS REQUIRED:

x1 5/8 x 48 x 96" (1,6 x 121,9 x 243,8 cm)

GAA
3/4" GAUGE BLOCK

x53 2" (5,1 cm)

BEGIN **Ensure your floor frame is square by installing one panel and squaring frame.**

1. Place first **48" x 96"** panel with the rough side up (painted-grid lines side) with the 48" edge and corner flush to the floor frame **(Fig A)**. Secure panel with (2) 2" nails in the corners.
2. Move to the opposite side. Using the long edge of the panel as a lever, move the panel side-to-side until the corner is flush to the floor frame **(Fig. B)**. Use the gauge block to ensure 3/4" on the joist. Secure panel with (2) 2" nails in the corners.
3. Ensure that the floor frame is square by measuring diagonally across the frame corners. If the measurements are the same your floor frame is square. The measurement will be approximately 203-5/8" (517,2 cm).
4. Secure the panel with 2" nails spaced 6" apart on edges and 12" apart inside panel. Use a chalk line or use pre-painted grid lines to nail into joists.

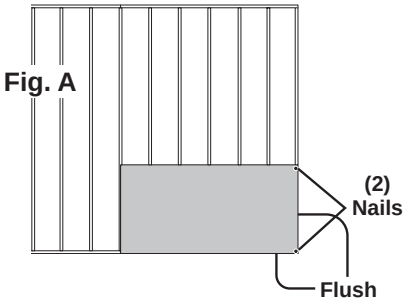

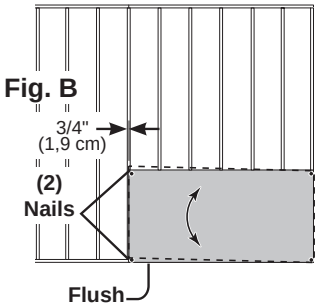

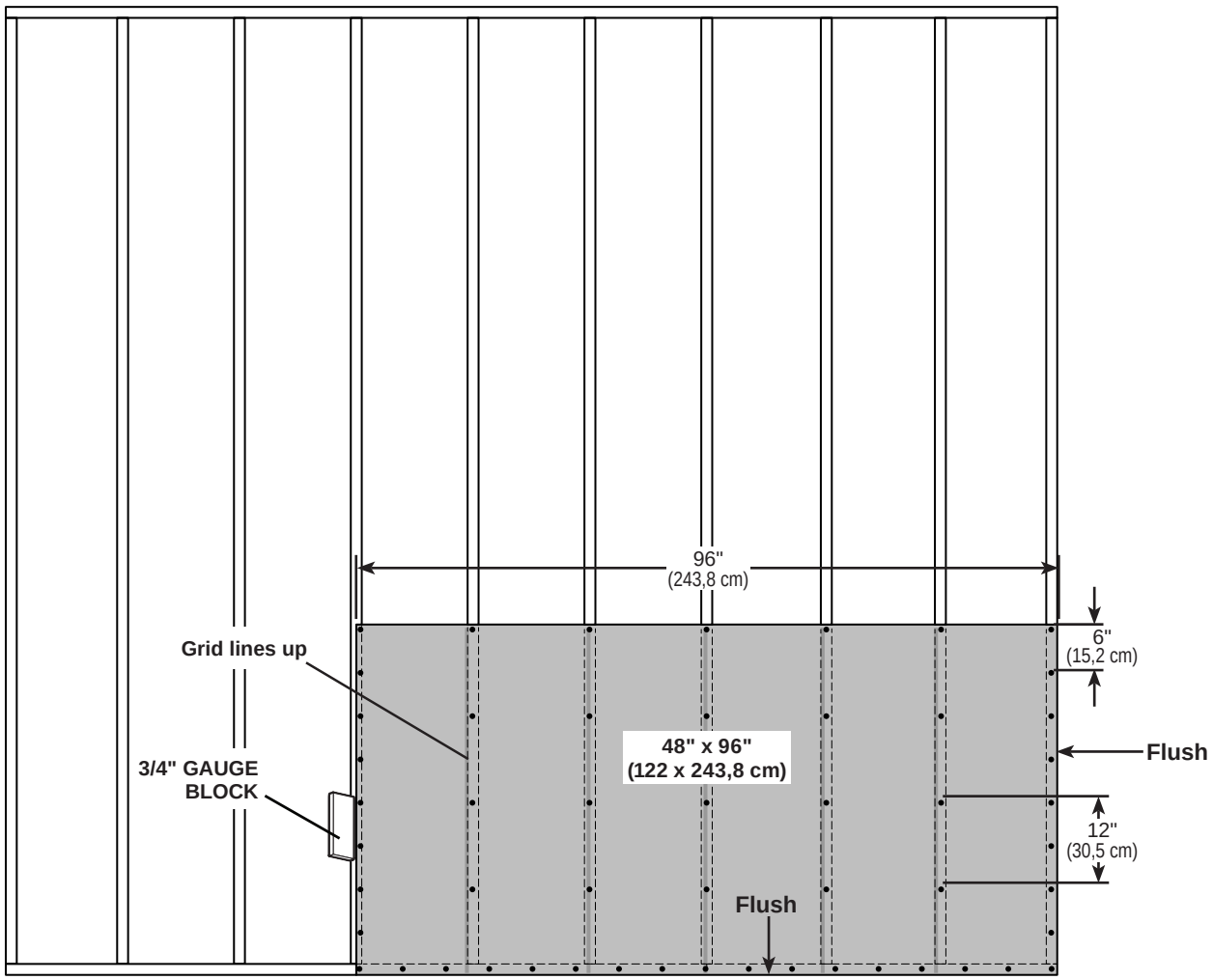

FLOOR PANELS

PARTS REQUIRED:

x2 — 5/8 x 48 x 96" (1,6 x 122 x 243,8 cm)

x3 — 5/8 x 47-7/8 x 48" (1,6 x 121,9 x 122 cm)

GAA — 3/4" GAUGE BLOCK

x185 — 2" (5,1 cm)



5 Continue installing panels with rough side up (painted grid lines).

Secure panels with 2" nails spaced 6" apart on edges and 12" apart inside panels.
Use grid lines to help find framing.

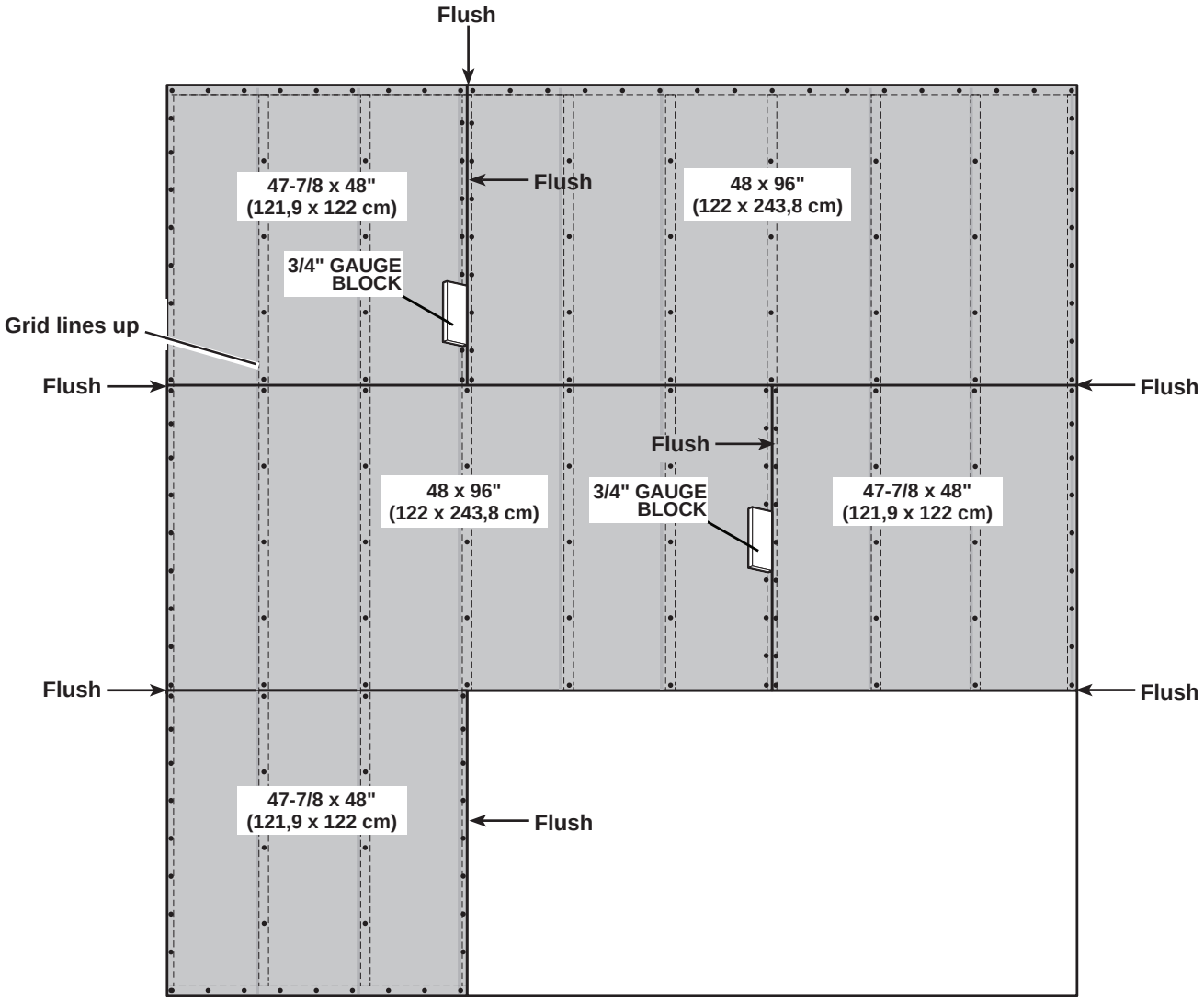

FINISH

Your floor panels are now installed.

⚠ *IMPORTANT!*

STOP! **Check that the floor frame is level after installing floor panels. Re-level if needed.**

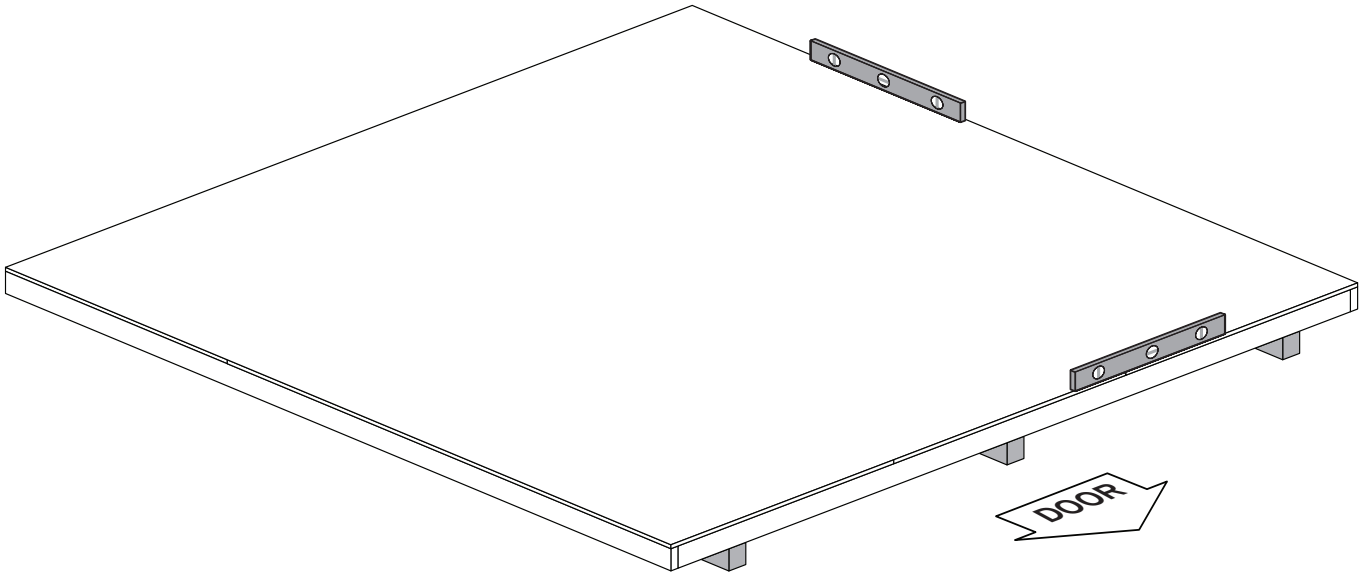

HINT:

- **The floor should used as a stable work surface for wall construction.**
- **Organize your assembly procedure during the build process to avoid over-handling of the walls.**

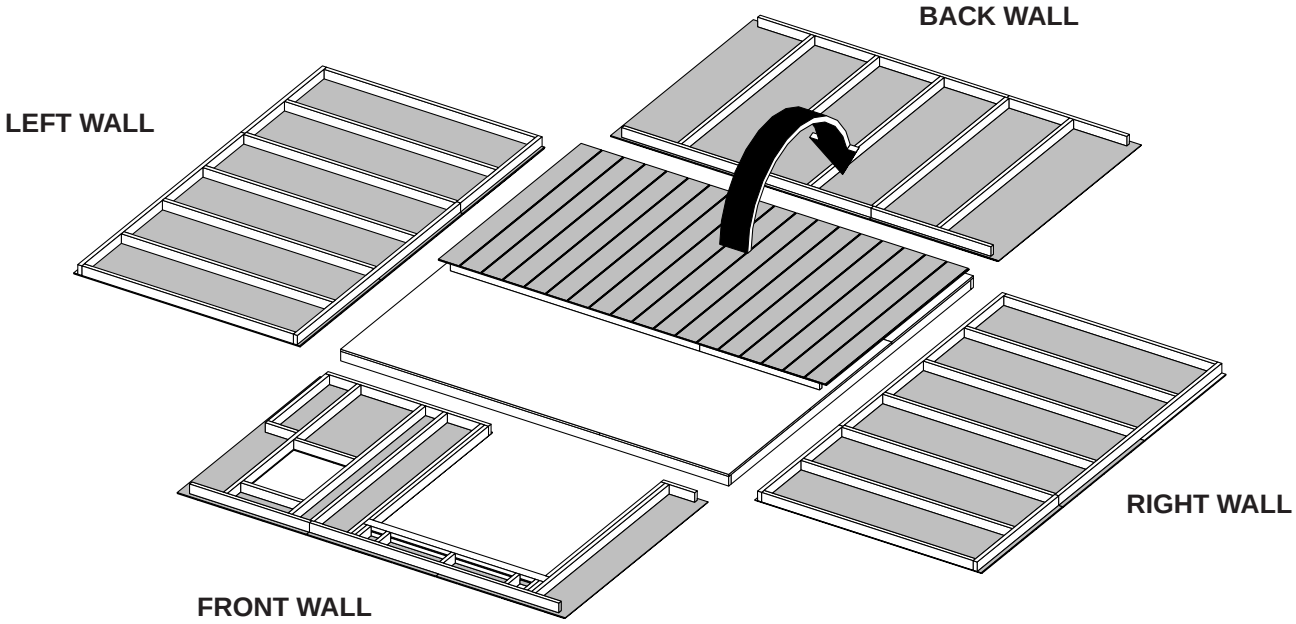

DOOR HEADER

Assemble this door header before building any walls!

Any wall with a door will require this assembly.

PARTS REQUIRED:

x18 3" (7,6 cm)

x2 **AM**
2 x 4 x 67" (5,1 x 10,2 x 170,2 cm)

x1
7/16 x 3-1/4 x 66-3/4" (1,1 x 8,3 x 170,2 cm) *OSB*

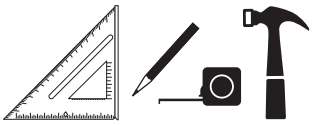

BEGIN

1 Place (1) **AM** and *OSB* end-to-end on flat surface, flush in middle. Center ***OSB*** on top of **AM**.

Fasten together with 3" nails in the pattern shown.

2 Flip header assembly over and nail as shown on the other side.

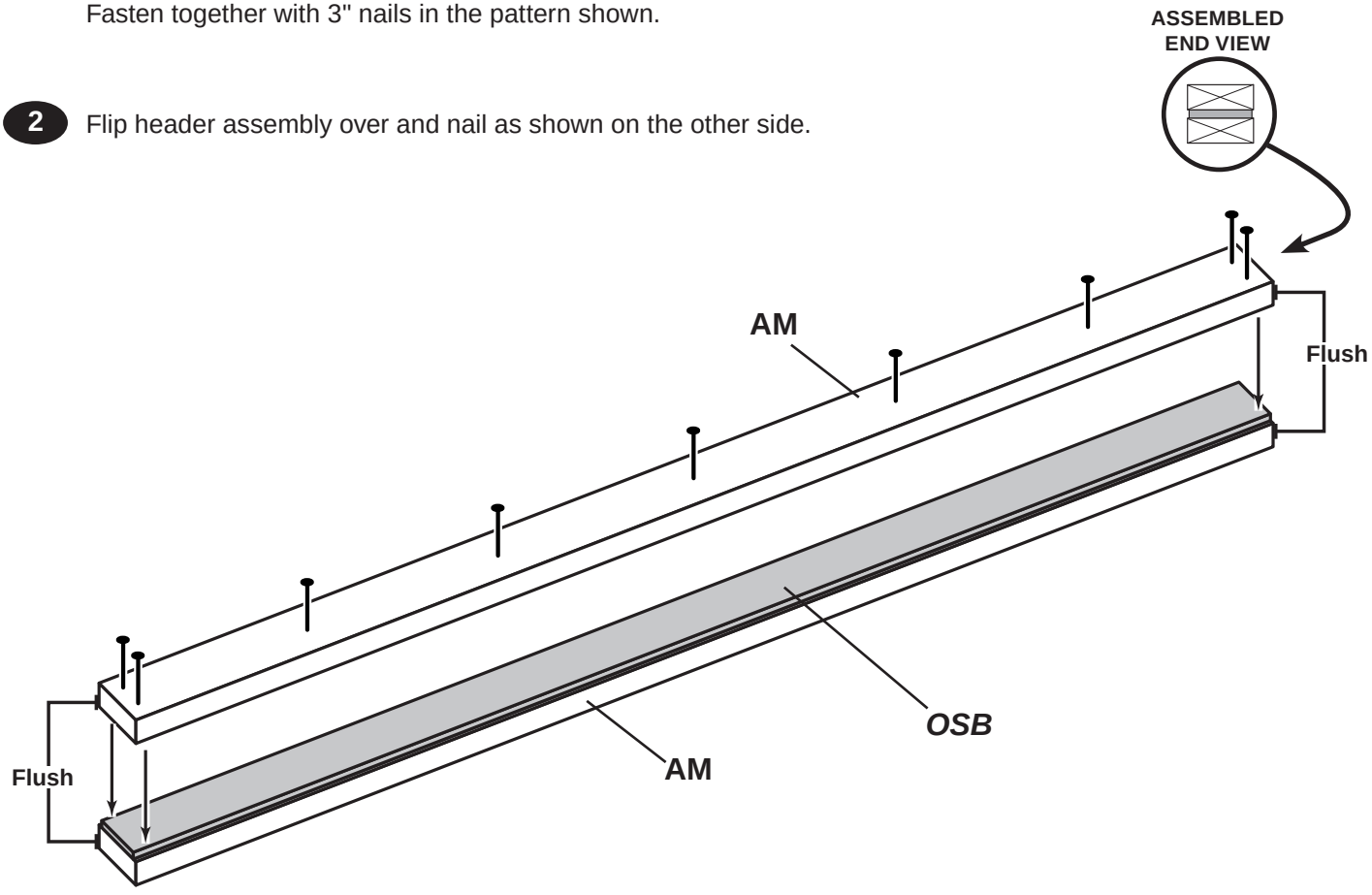

FINISH

Your door header is now assembled.

WALL PANEL INSTALLATION HINTS & EXAMPLES

PARTS REQUIRED:

x40 — 2" (5,1 cm)

x1 — 3/8 x 48 x 84" (1 x 121,9 x 213,4 cm)

GAA 3/4" GAUGE BLOCK

2x3" TEMP. SPACER

Ensure your wall is square by installing one panel and squaring frame.

Install all wall panels with the primed side facing up.

BEGIN

1 Place a **48" X 84"** panel on the wall frame, as shown.
Locate the panel 1-1/2" above the top plate.
Use a 2x3 as a gauge block for the 1-1/2" top overhang measurement.
Use the gauge block to mark the 3/4" side measurement on the wall stud.
Secure panel with (2) 2" nails in the corners **(Fig. A).**

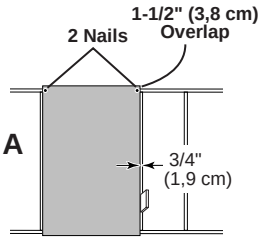

Fig. A

2 Move to the opposite end. Using the long edge of the panel as a lever, move the panel side-to-side until you have a 3/4" measurement on the wall stud.
Secure corner with (2) 2" nails **(Fig. B)**.
Secure panel with 2" nails spaced 6" apart on edges and 12" apart inside panel.
Note the panel lip-edge/square edge orientation.

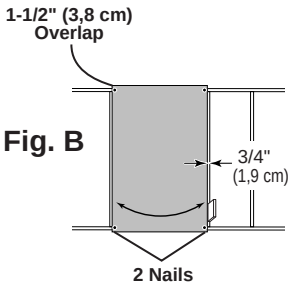

Fig. B

For squareness maintain 3/4" and 1-1/2" measurement along panel edge.

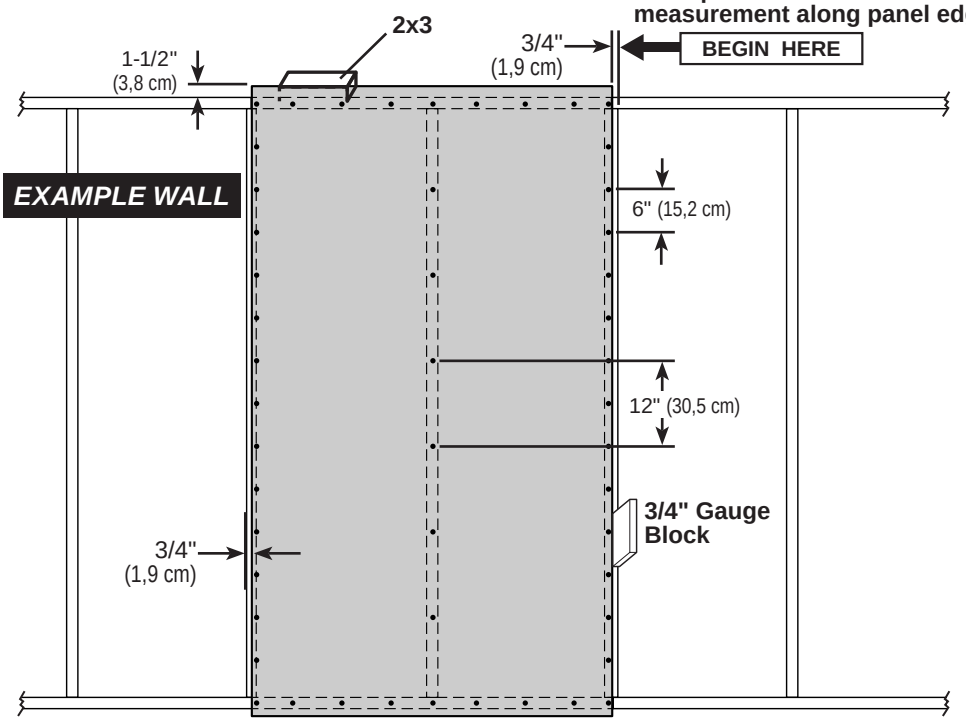

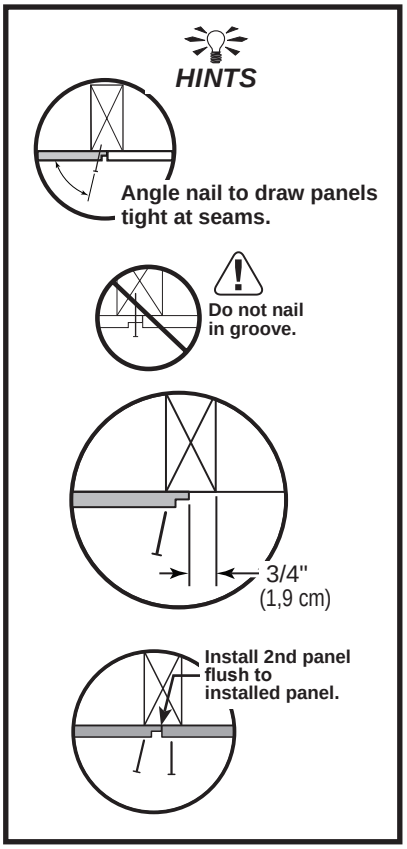

12' EAVE WALL

PARTS REQUIRED:

x5 **AL** — 2 x 4 x 7" (5,1 x 10,2 x 17,8 cm)

Pre Assembled Header

x1 — 2 x 4 x 7" (5,1 x 10,2 x 17,8 cm)

x1 **SG** — 2 x 4 x 34" (5,1 x 10,2 x 86,4 cm)

x1 **AV** — 2 x 4 x 60-1/2" (5,1 x 10,2 x 153,7 cm)

x2 **UM** — 2 x 4 x 68" (5,1 x 10,2 x 172,7 cm)

x2 **YFA** — 2 x 4 x 68-1/2" (5,1 x 10,2 x 174 cm)

x5 **AI** — 2 x 4 x 78-1/2" (5,1 x 10,2 x 199,4 cm)

x80 — 3" (7,6 cm)

x6 — 3" (7,6 cm)



x1 **AJ** — 2 x 4 x 12-1/2" (5,1 x 10,2 x 31,8 cm)

BEGIN

1 Arrange parts on edge on floor, as shown. Measure and mark from end of boards.
Orient **Pre Assembled Header** on flat side **(Fig. A)**.
Secure parts with (2) 3" nails at each connection.

2 Fasten (3) middle parts **AL** to **Pre Assembled Header** with (2) 3" screws **(Fig. B)**.
Secure parts **AL** to top plates with (2) 3" nails at each connection and (4) 3" nails at seam.

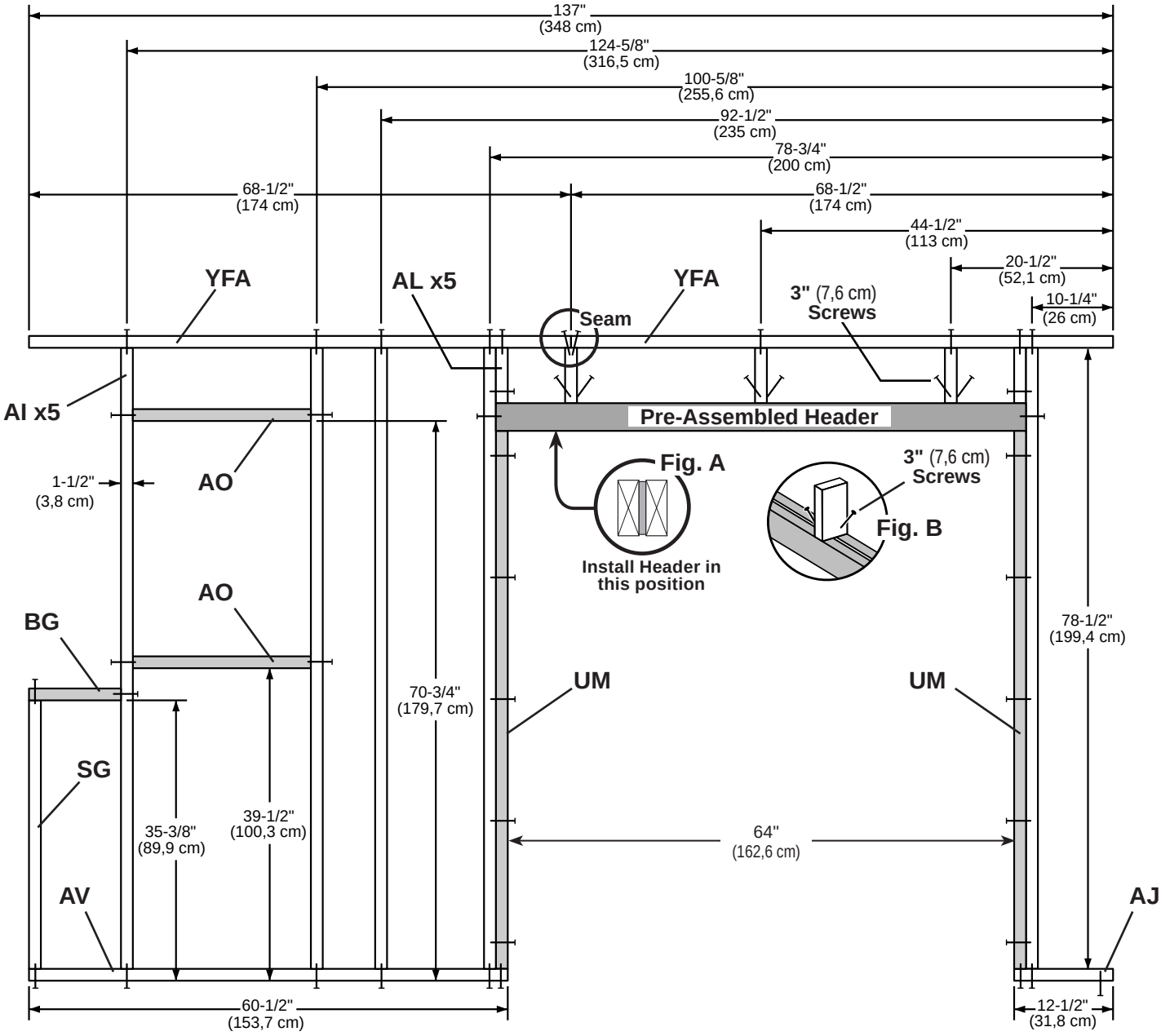

12' EAVE WALL

PARTS REQUIRED:

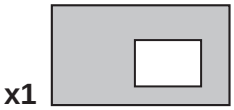

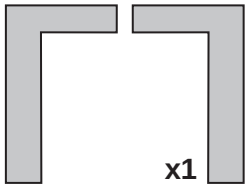

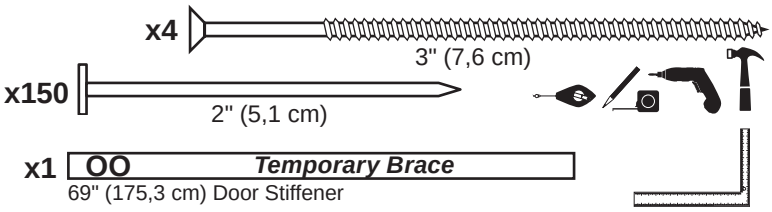

x1 **OO** ***Temporary Brace***
69" (175,3 cm) Door Stiffener

3

Install the left door panel on wall frame, 1-1/2" from the top plate.
Use a 2x4 spacer for consistent measurement.
Secure panel with 2" nails spaced 6" apart on edges.

4

Install the right door panel flush to installed panel, as shown.
Ensure 64" (162,6 cm) door measurement.
Use part **OO** as a temporary brace.
Secure with with (2) 3" screws.

Secure panel with 2" nails spaced 6" apart on edges.

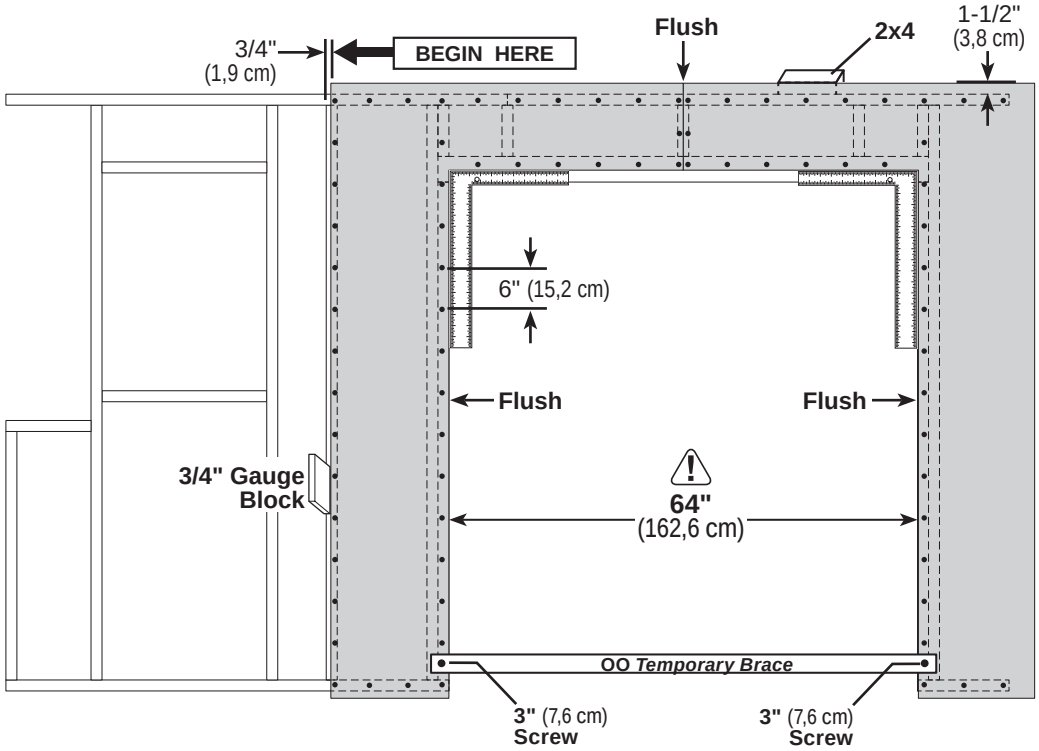

5

Install **48" x 84"** window cutout panel flush to installed panel and 1-1/2" from the top plate.

Secure panel with 2" nails spaced 6" apart on edges and 12" apart inside panel.



Your 12' eave wall is now assembled.
Carefully flip the wall over.

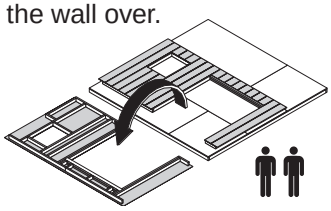

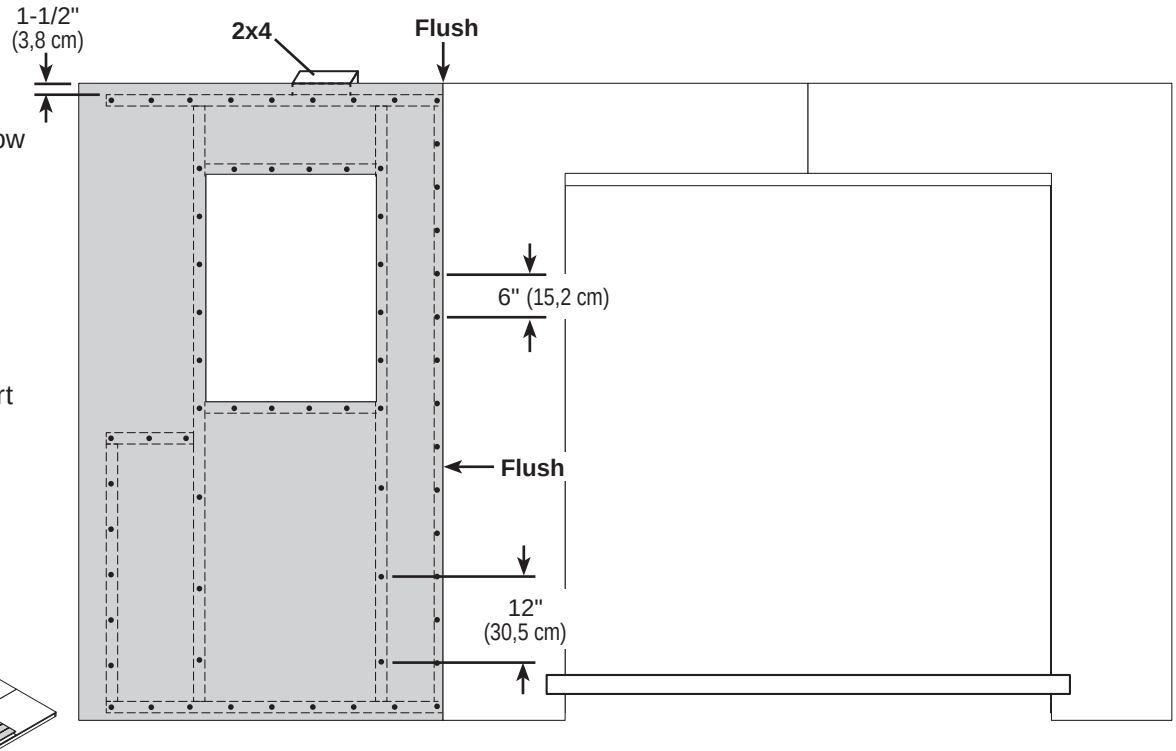

12' GABLE WALL

PARTS REQUIRED:

x2 SP
2 x 4 x 48" (5,1 x 10,2 x 121,9 cm)

x7 AI
2 x 4 x 78-1/2" (5,1 x 10,2 x 199,4 cm)

x2 TP
2 x 4 x 96" (5,1 x 10,2 x 243,8 cm)

x28

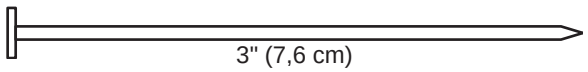



Build (2) identical 12' gable walls.

BEGIN

1 Arrange parts on edge on floor as shown. Measure and mark from end of boards. Secure with (2) 3" nails at each connection and (4) 3" nails at seams.

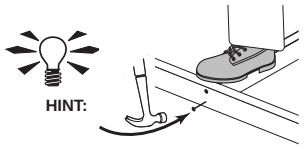

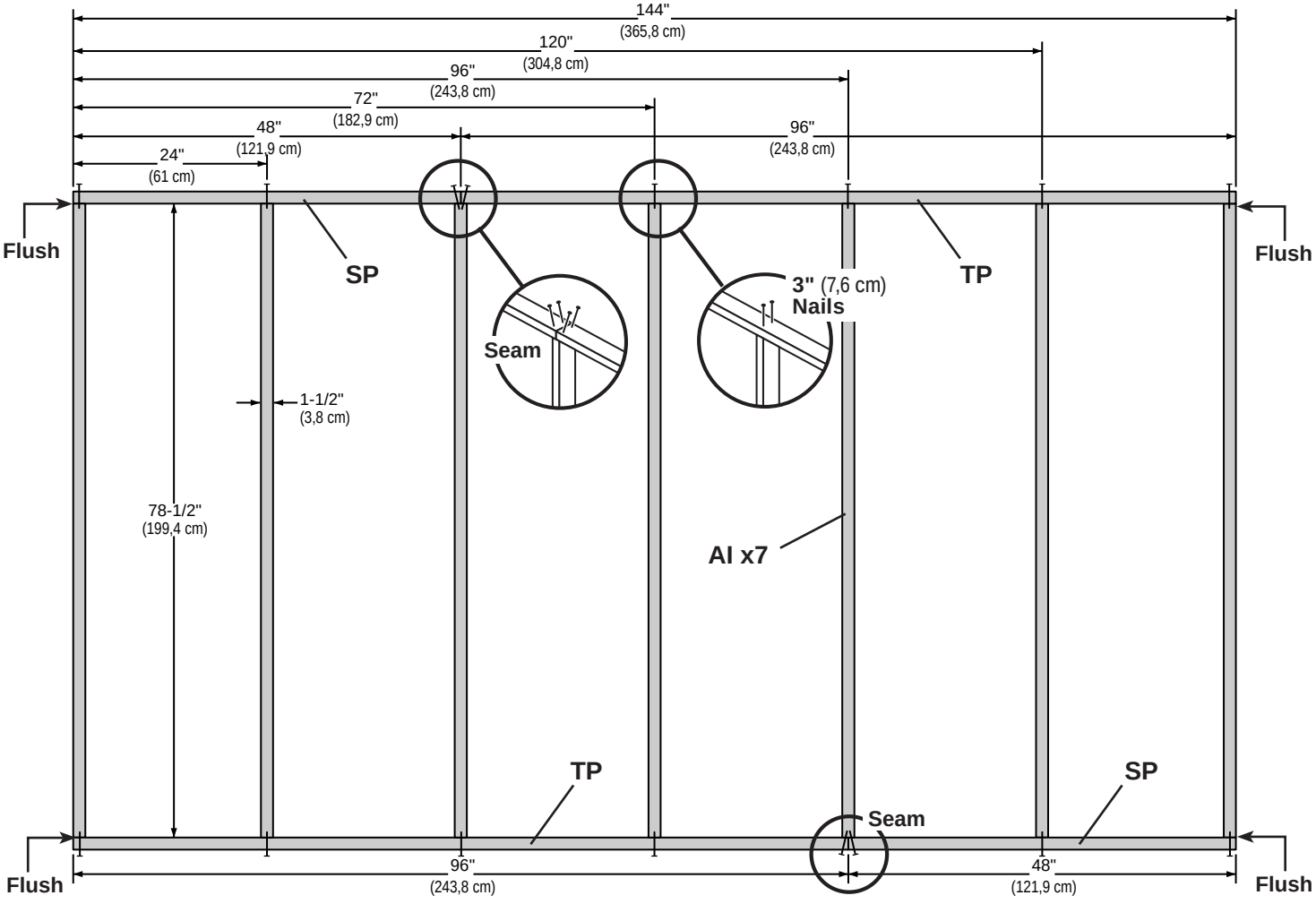

12' GABLE WALL

PARTS REQUIRED:

x136

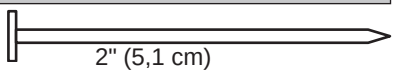

x3



48" x 84"
(121,9 x 213,4 cm)

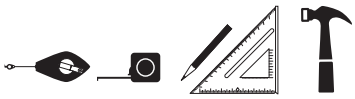

2

Install **48" x 84"** panel 1-1/2" from the top plate.

Use a 2x3 spacer for consistent measurement.

Secure panel with 2" nails spaced 6" apart on edges and 12" inside panel.

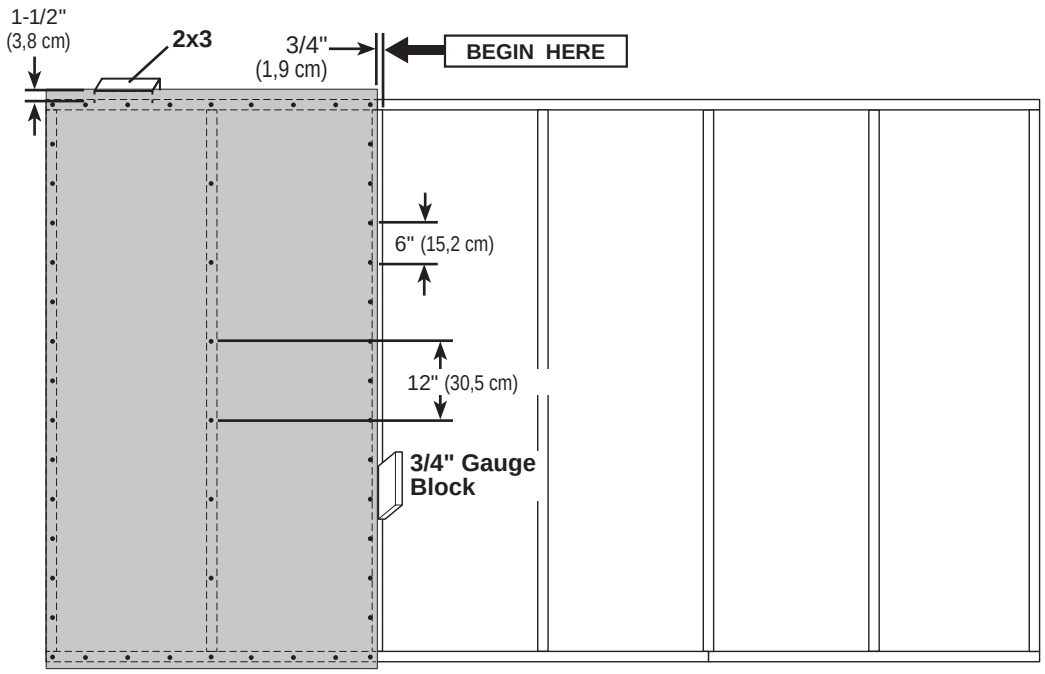

3

Install (2) **48" x 84"**panels flush to installed panels.

Locate panels 1-1/2" from the top plate.

Secure with 2" nails spaced 6" apart on edges and 12" apart inside panel.

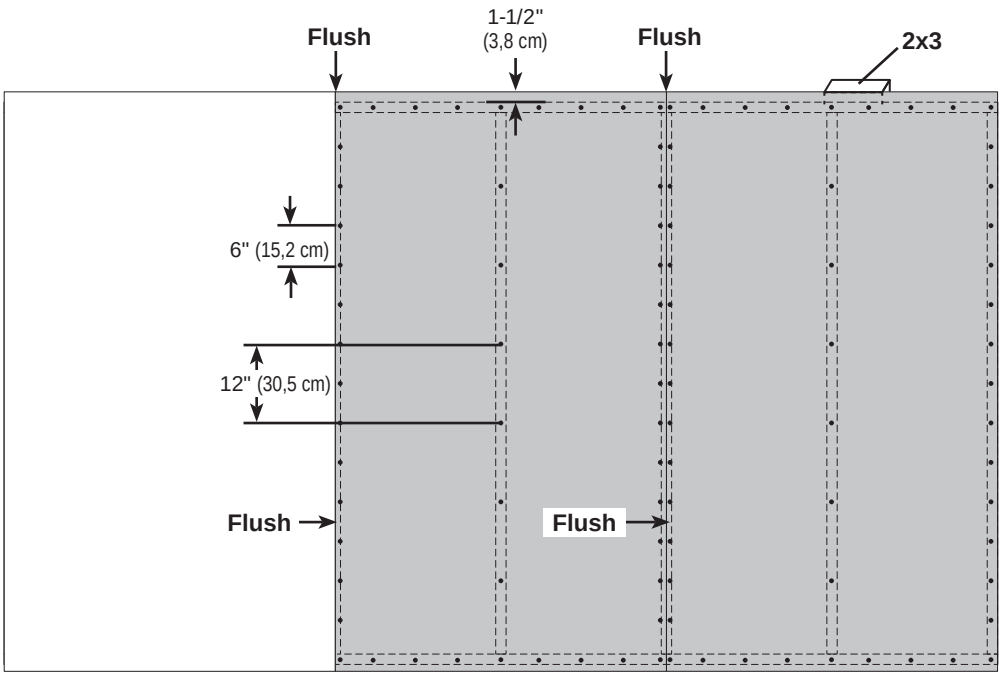

Your first 12' gable wall is now assembled.
Carefully flip the wall over.

Repeat steps to build your second 12' gable wall.

FINISH

Your (2) 12' gable walls are now assembled.
Carefully flip the wall over.

12' EAVE WALL

PARTS REQUIRED:

x24 — 3" (7,6 cm)

x1 **HVC** — 2 x 4 x 44-3/8" (5,1 x 10,2 x 112,7 cm)

x1 **TJ** — 2 x 4 x 92-5/8" (5,1 x 10,2 x 235,3 cm)

x2 **YFA** — 2 x 4 x 68-1/2" (5,1 x 10,2 x 174 cm)

x5 **AI** — 2 x 4 x 78-1/2" (5,1 x 10,2 x 199,4 cm)

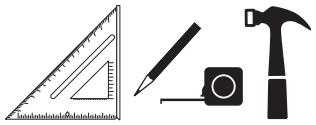

BEGIN

1 Orient parts on edge on floor. Measure and mark from end of boards. Secure with (2) 3" nails at each connection and (4) 3" nails at seams.

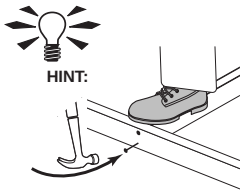

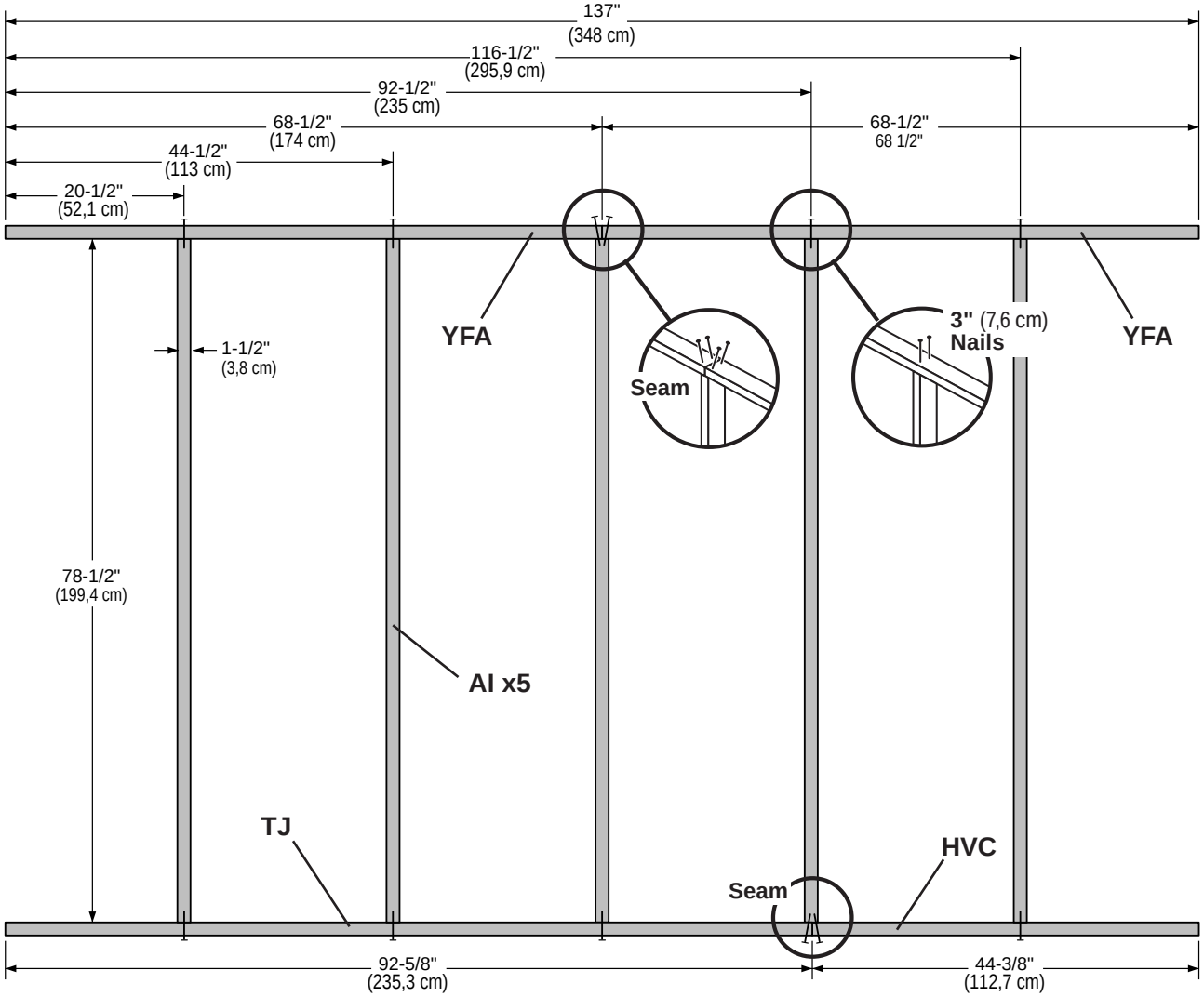

12' EAVE WALL

PARTS REQUIRED:

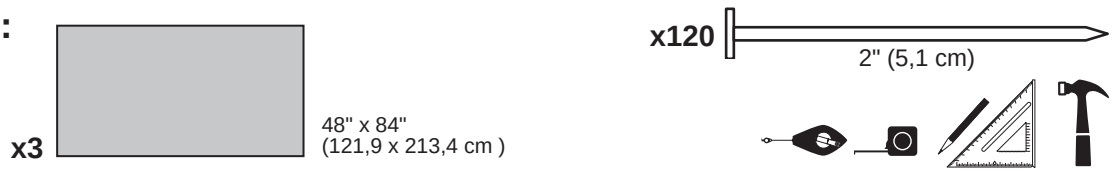

2

Install **48" x 84"** panel 1-1/2" from the top plate.

Use a 2x3 spacer for consistent measurement.

Secure panel with 2" nails spaced 6" apart on edges and 12" inside panel.

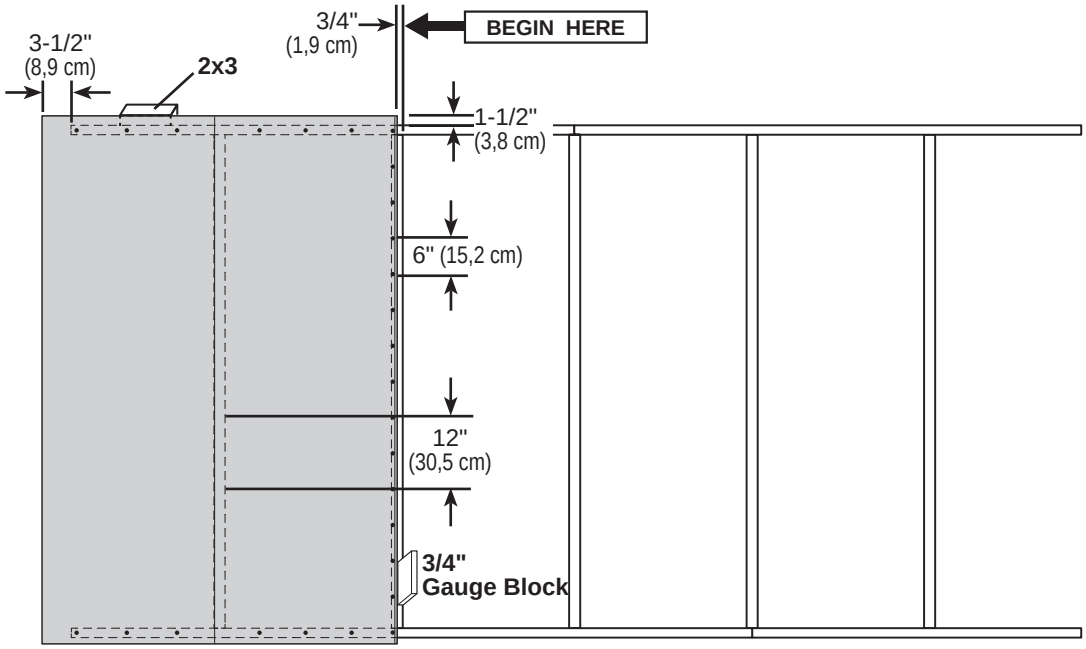

3

Install (2) **48" x 84"** panels flush to installed panels.

Locate panels 1-1/2" from the top plate.

Secure with 2" nails spaced 6" apart on edges and 12" apart inside panel.

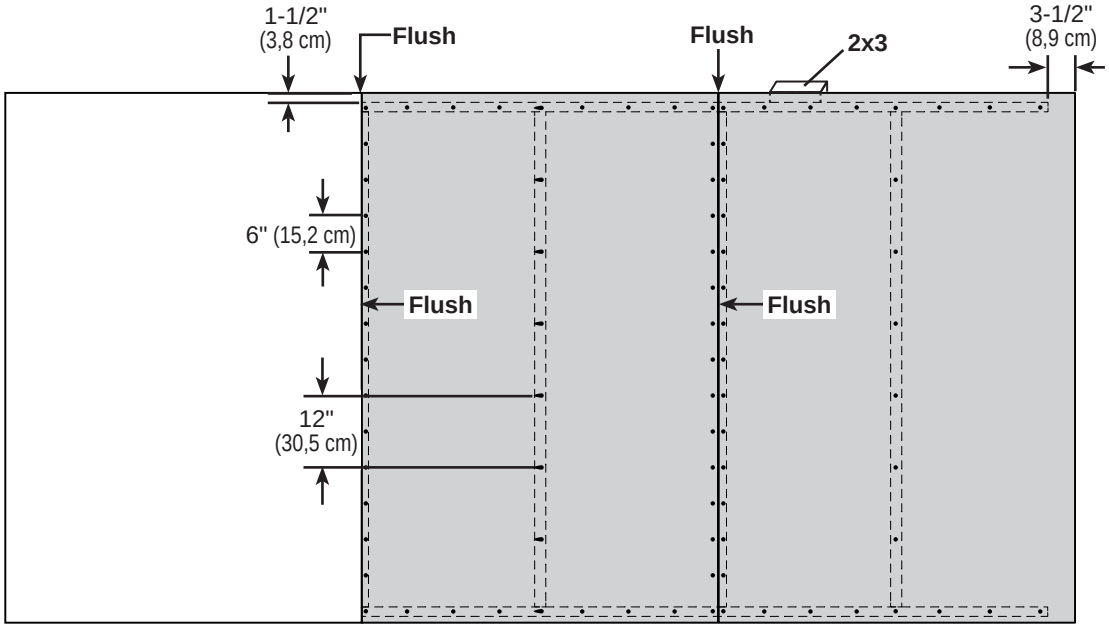

FINISH

Your 12' eave wall is now assembled.

Carefully flip the wall over.

EAVE WALL INSTALLATION

PARTS REQUIRED:

x2 — 3" (7,6 cm)

x27 — 2" (5,1 cm)

x12 — 3" (7,6 cm)

x2 **OO** — 69" (175,3) Door Stiffener

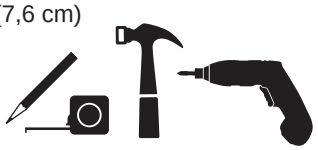

BEGIN

1 Center right eave wall on the floor.

⚠ Ensure 1-1/2" measurement is at the top.

Use **OO** as a temporary brace.
Secure with (2) 3" screws.

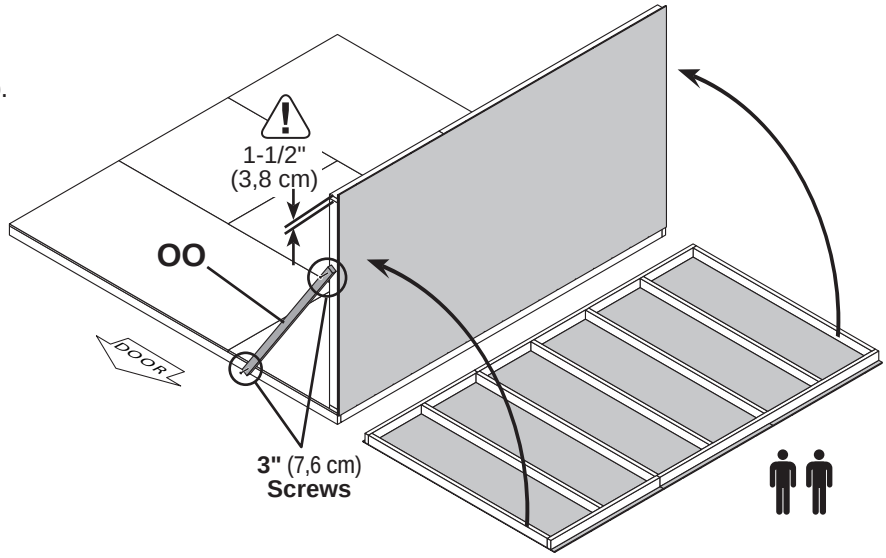

2 Secure lower edge of panel to floor frame with 2" nails spaced 6" apart.
Angle nails into the floor frame **(Fig. A)**.

3 Secure wall bottom plates to floor with 3" nails **(Fig. A)**.

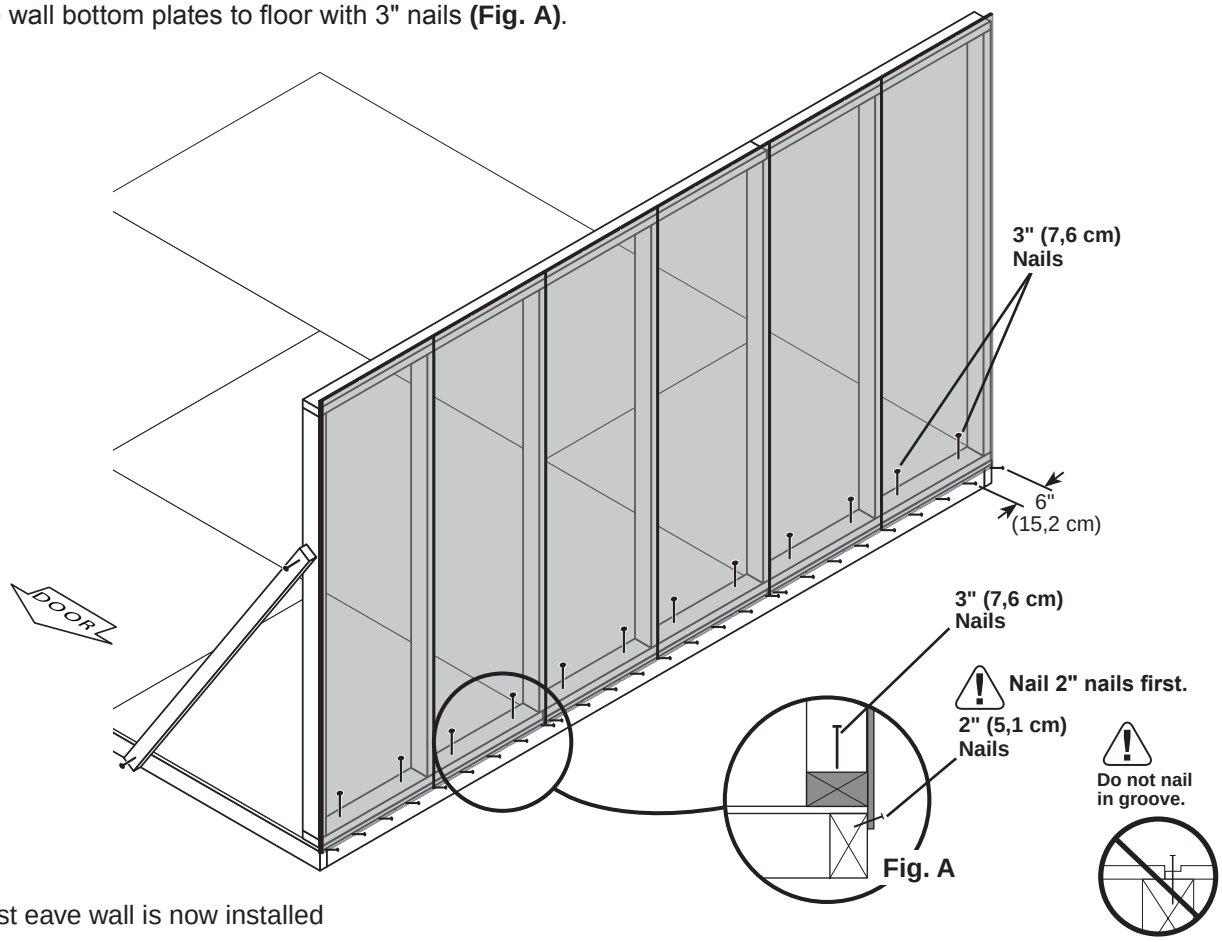

FINISH

Your 1st eave wall is now installed

GABLE WALL INSTALLATION

PARTS REQUIRED:

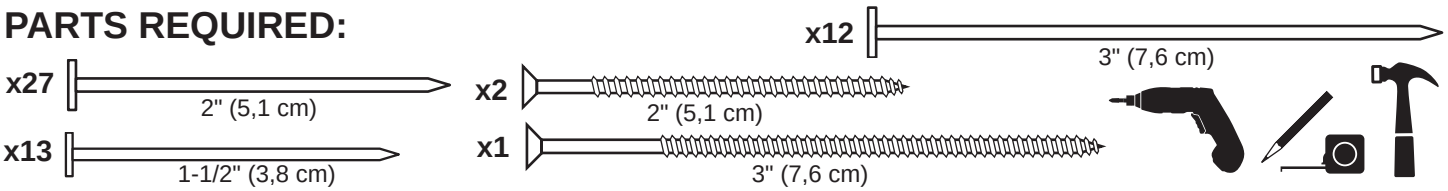

BEGIN

1 Center back gable wall on the floor.

Ensure 1-1/2" measurement is at the top.

Secure wall with (1) 2" screw into side wall bottom plate **(Fig. A)** and top plate **(Fig. B)**.

Secure wall to bottom plate first.

ENSURE PANEL CORNERS ARE FLUSH.

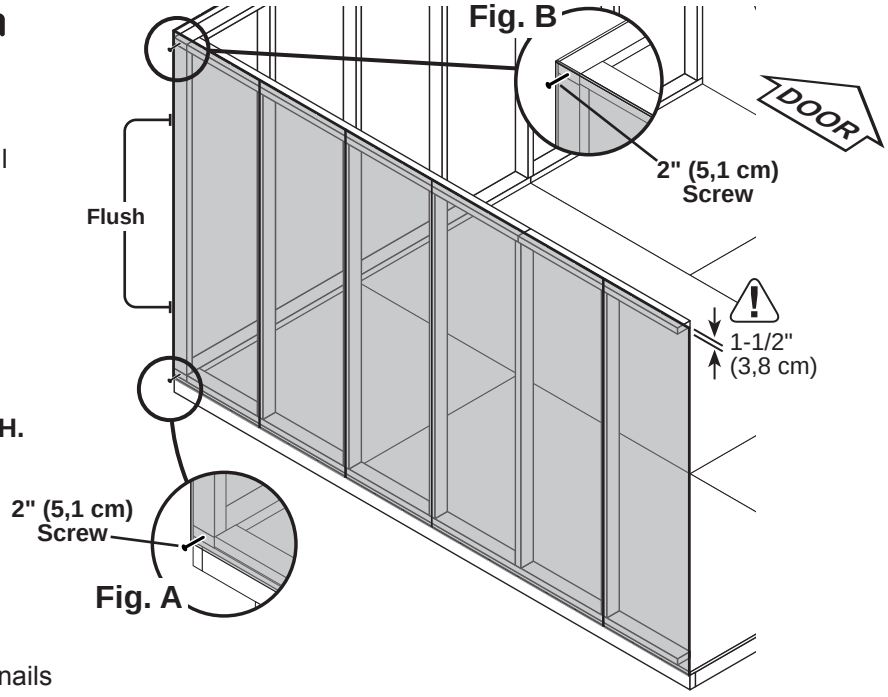

2 Nail lower edge of panels to floor with 2" nails spaced 6" apart.
Angle nails into the floor frame **(Fig. C)**.

Secure wall bottom plates to floor with 3" nails **(Fig. C)**.

Nail panel to side wall stud with 1-1/2" nails spaced 6" apart..

3 Secure wall top plate with (1) 3" screw at the corner at an angle, as shown in **(Fig. D)**.

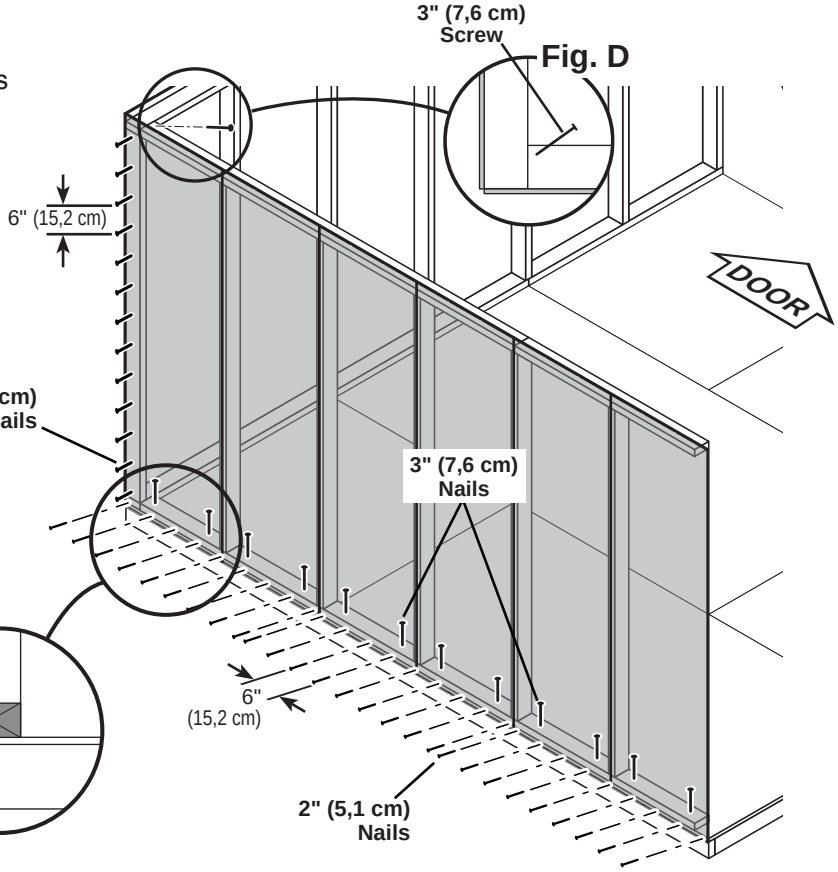



Nail 2" nails first.

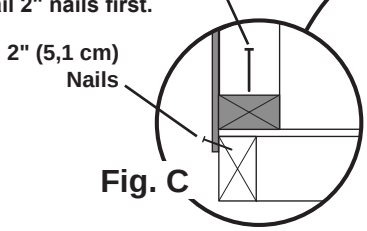

FINISH

Your back gable wall is now installed.

GABLE WALL INSTALLATION

PARTS REQUIRED:

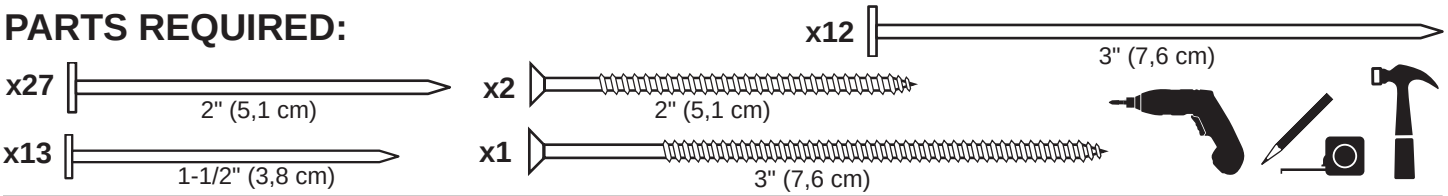

BEGIN

1 Center 2nd gable wall on the floor.

Ensure 1-1/2" measurement is at the top.

Secure back wall with (1) 2" screw into side wall bottom plate **(Fig. A)** and top plate **(Fig. B)**.

Secure wall to bottom plate first.

ENSURE PANEL CORNERS ARE FLUSH.

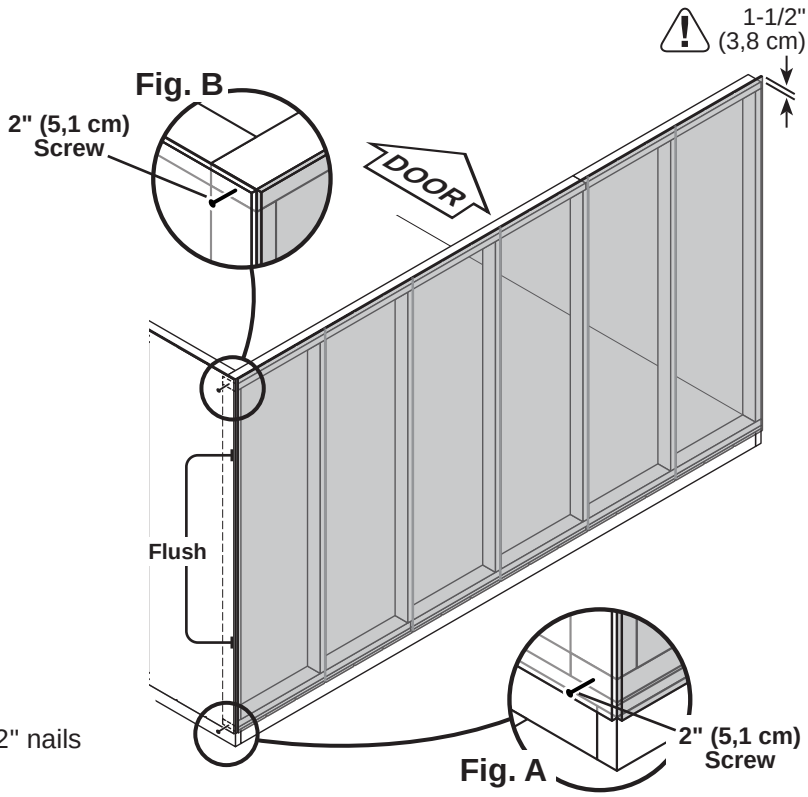

2 Nail lower edge of side wall panels to floor with 2" nails spaced 6" apart.
Angle nails into the floor frame **(Fig. C)**.

Secure wall bottom plates to floor with 3" nails **(Fig. C)**.

Nail back wall panel to side wall stud with 1-1/2" nails spaced 6" apart.

3 Secure wall top plate with (1) 3" screw at the corner at an angle, as shown **(Fig. D)**.

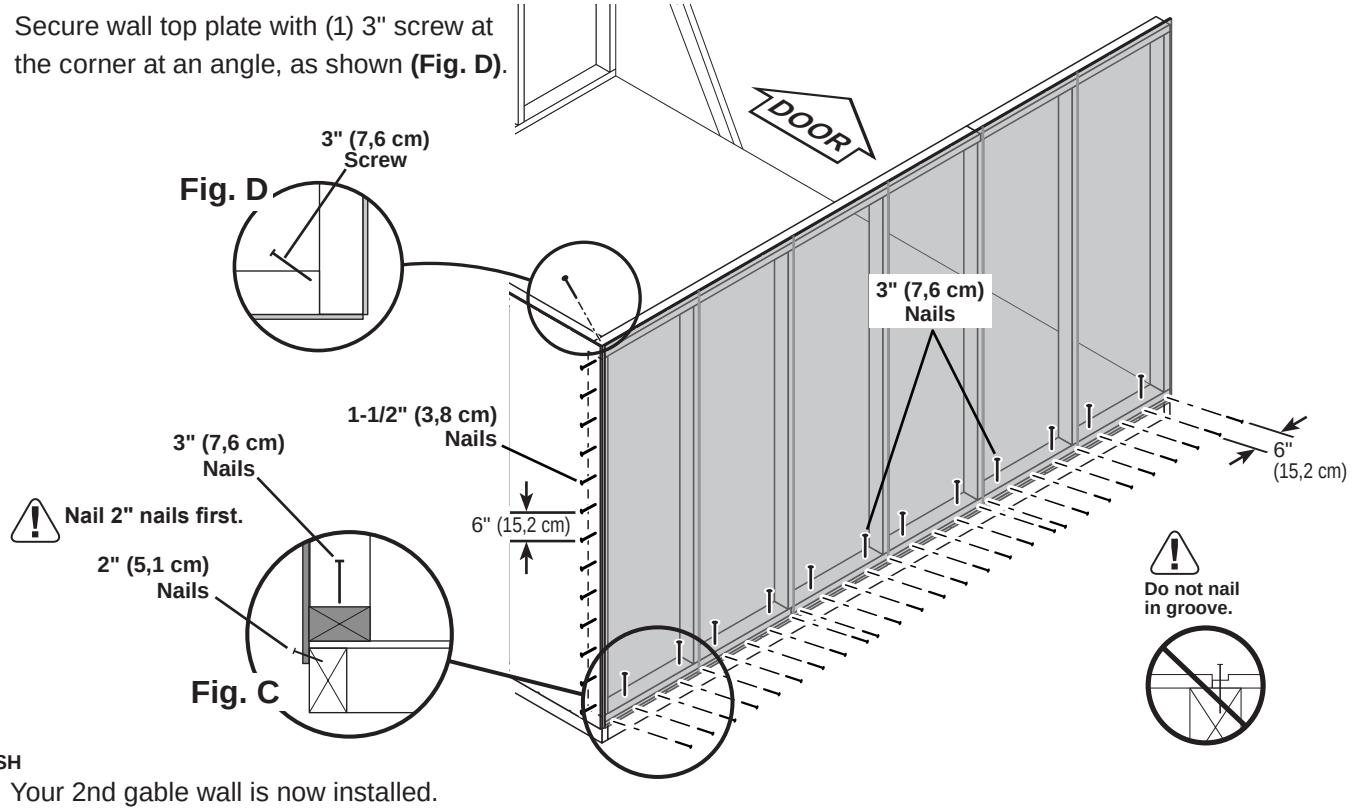

FINISH

Your 2nd gable wall is now installed.

EAVE WALL INSTALLATION

PARTS REQUIRED

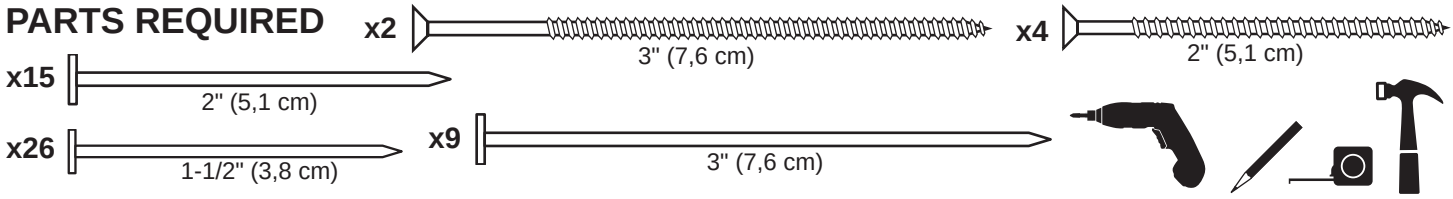

BEGIN

1 Place front gable wall on floor, centered between eave walls.

Secure wall with 2" screws into top and bottom plates **(Fig. A, Fig. B)**.

Secure wall to bottom plate first.

⚠ **ENSURE PANEL CORNERS ARE FLUSH.**

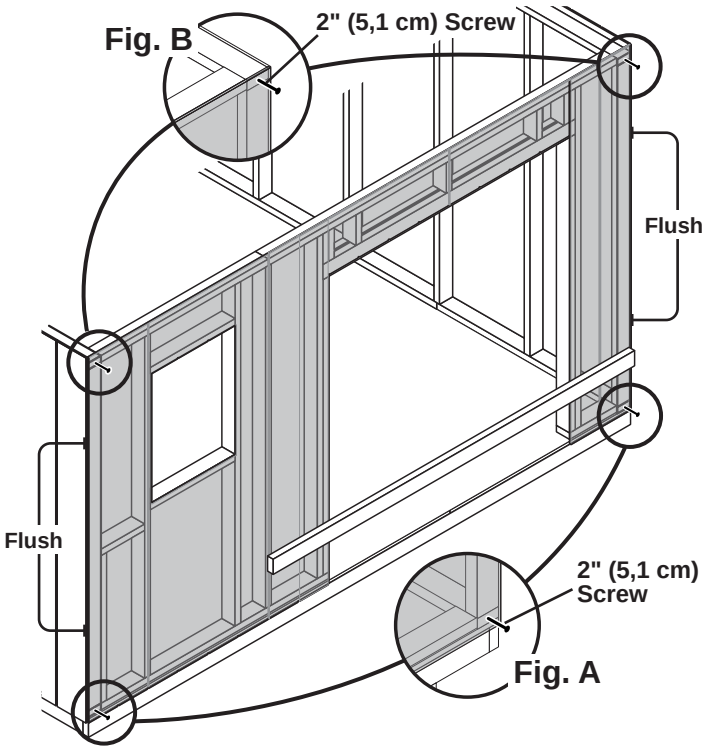

2 Nail lower edge of panels to floor with 2" nails spaced 6" apart.
Angle nail to hit floor frame **(Fig. C)**.

Secure panels to both side wall studs with 1-1/2" nails spaced 6" apart.

Secure wall bottom plates to floor with 3" nails **(Fig. C)**.

3 Secure top plates with 3" screws at each corner at an angle as shown **(Fig. D)**.

REMOVE TEMPORARY BRACING

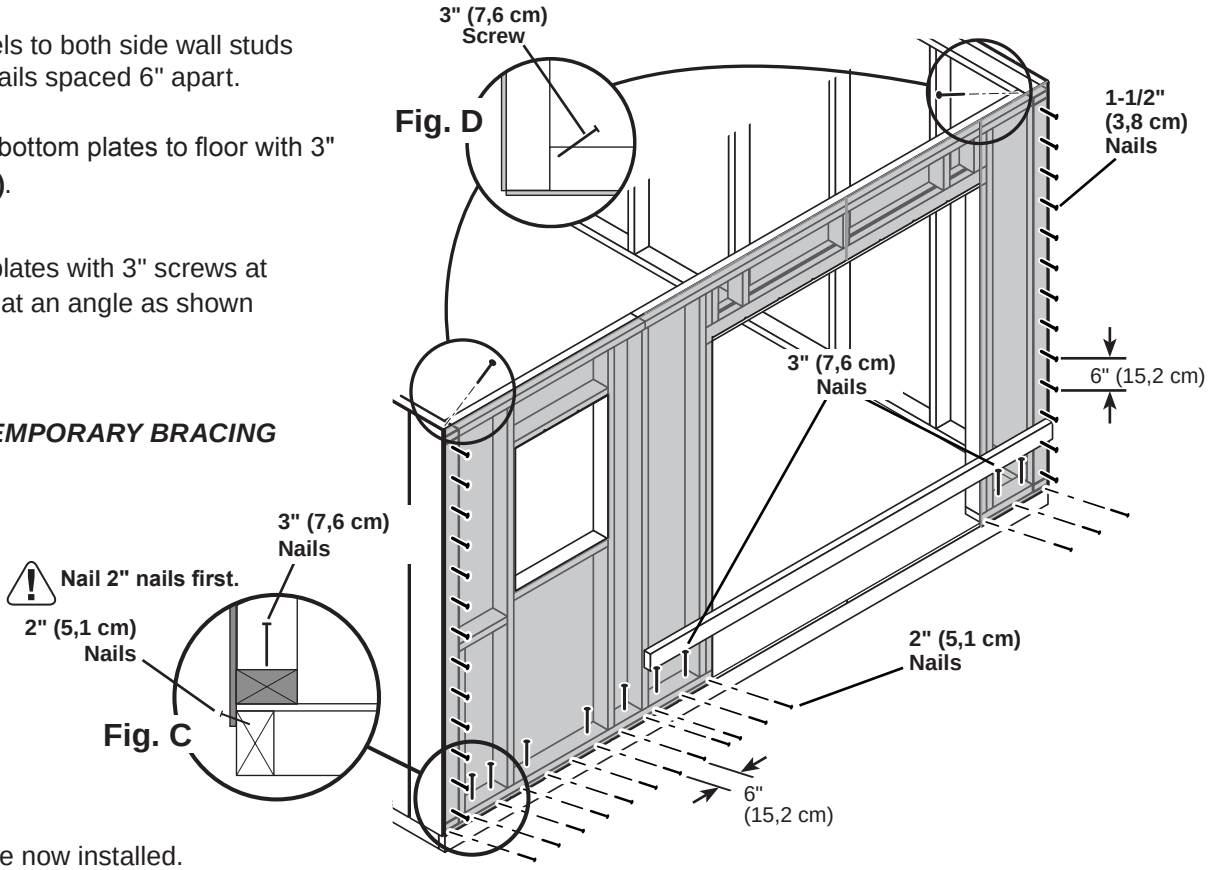

FINISH

Your walls are now installed.

DOUBLERS INSTALLATION

PARTS REQUIRED:

x2 SP
2 x 4 x 48" (5,1 x 10,2 x 121,9 cm)

x2 HVC
2 x 4 x 44-3/8" (5,1 x 10,2 x 112,7 cm)

x2 TJ
2 x 4 x 92-1/2" (5,1 x 10,2 x 235 cm)

x2 TP
2 x 4 x 96" (5,1 x 10,2 x 243,8 cm)

x64
3" (7,6 cm)

x16
3" (7,6 cm)

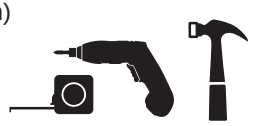

BEGIN

1 Orient parts on top of wall frames. Secure from top with (2) 3" nails spaced every 24" **(Fig. A).**

2 Secure from bottom with (2) 3" screws at each corner **(Fig. B).**

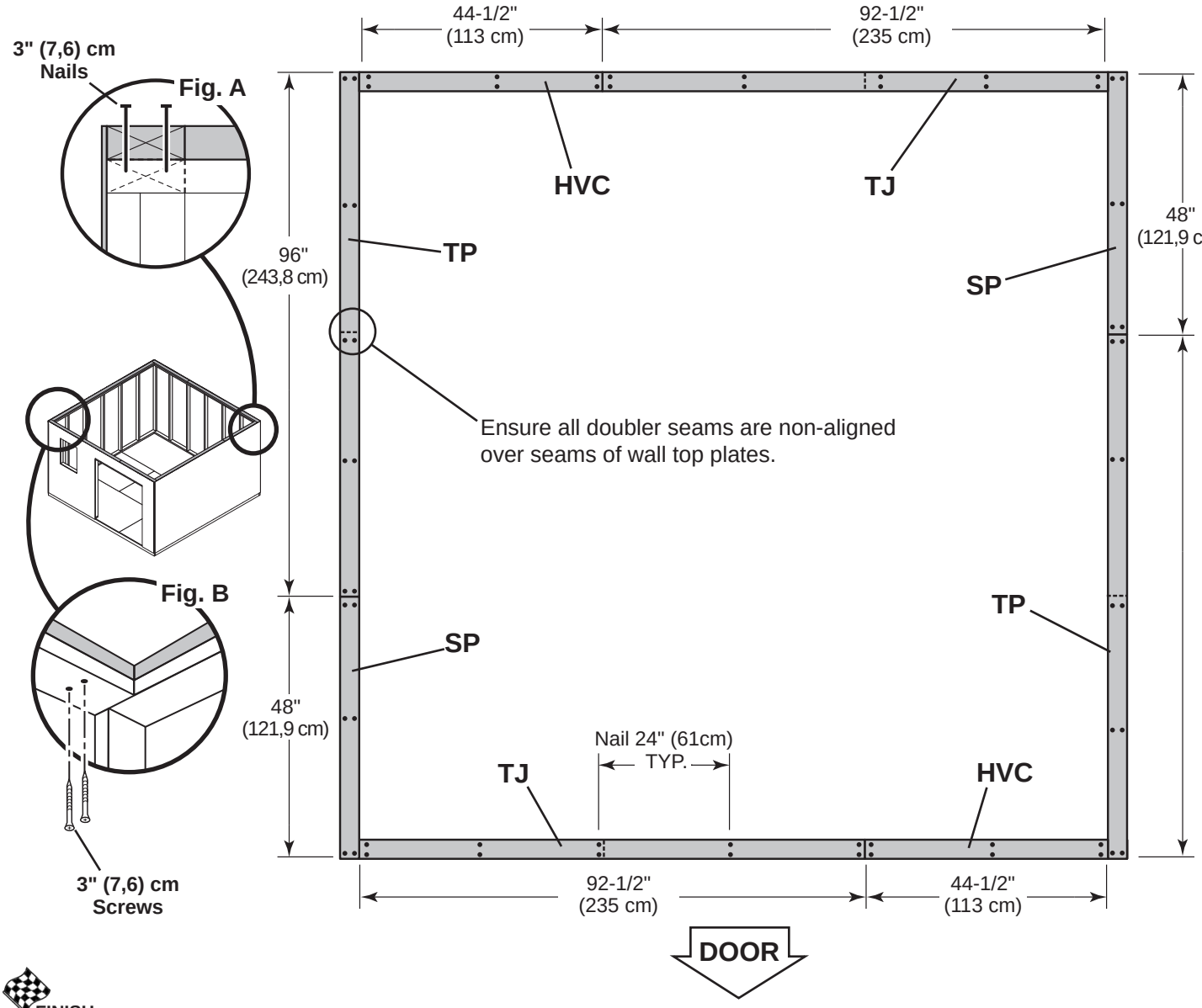

FINISH

Your wall doublers are now installed.

RAFTERS

PARTS REQUIRED:

x144 2" (5,1 cm)

x12 6 x 24" (15,2 x 60,9 cm)

x14 **ADA**
2 x 4 x 77-15/16" (5,1 x 10,2 x 198 cm)

x1 **OO** **Temporary Support**
69" (175,3 cm) Door Stiffener

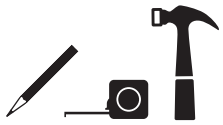

Build (2) rafter assemblies with (1) gusset (Fig. B).

BEGIN

1 Place two rafter-halves **AD** in the corner of back and side walls, flush to panels and studs.

Flush rafters at peak. Secure gusset to rafters with 2" nails following the pattern shown **(FIg. A)**.

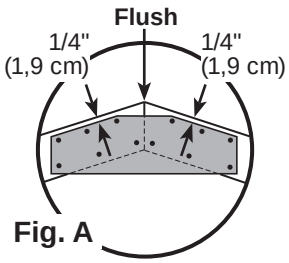

Fig. A

HINT:
Use floor and walls to help assemble rafters!

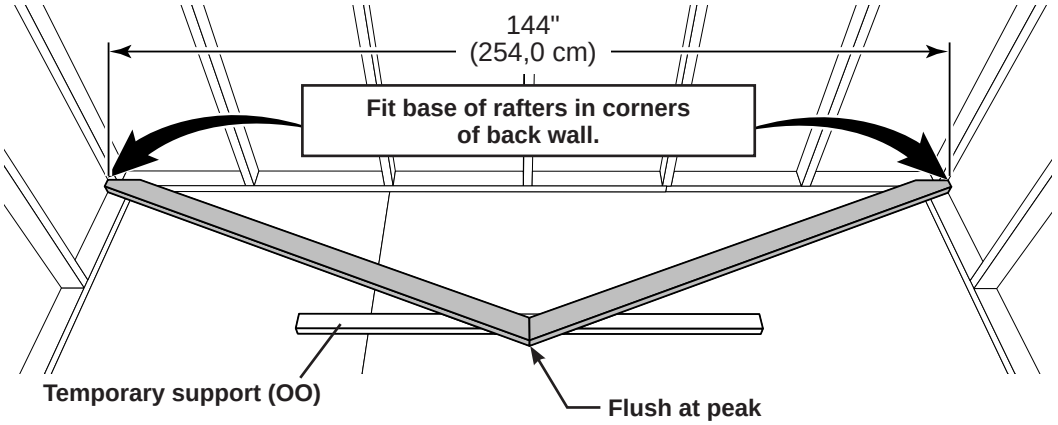

SET ASIDE THESE TWO RAFTER ASSEMBLIES.

Build 5 rafter assemblies with (2) gussets (Fig. C).

2 Place two rafter-halves **AD** in the corner of back and side walls, flush to panels and studs (STEP - 1).

Flush rafters at peak. Secure gusset to rafters with 2" nails following the pattern shown **(FIg. A)**.

3 Flip over rafter assembly and fasten second gusset to other side with 2" nails **(FIg. C)**.

Fig. B - ***Build 2***

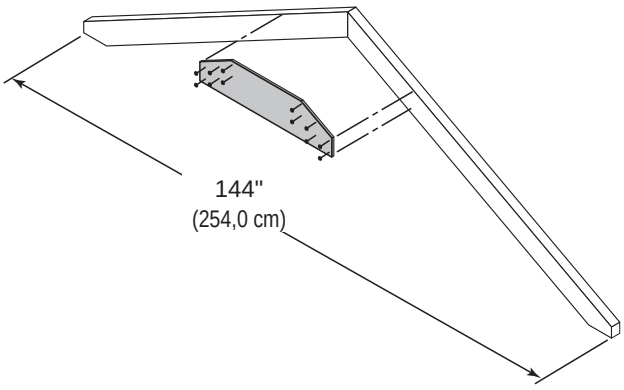

Fig. C - ***Build 5***

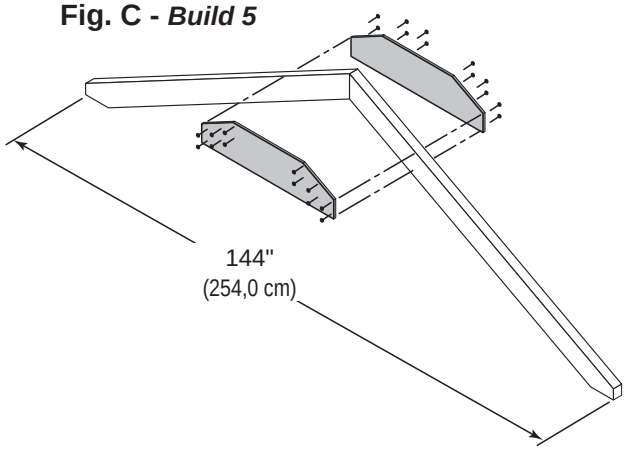

FINISH

Your rafters are now assembled.

12' x 12' RAFTER INSTALLATION

PARTS REQUIRED:

x24

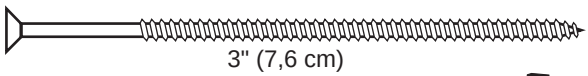

3" (7,6 cm)

x5



(2) Gusset Preassembled

x2



(1) Gusset Preassembled

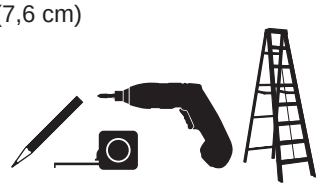

BEGIN

1 Align rafters with the wall studs.

Ensure the measurement between rafters, as shown.

Secure (5) rafters with (2) 3" screws angled into doublers **(Fig. A)**.

Secure end rafters with (1) 3" screw **(Fig. B)**.

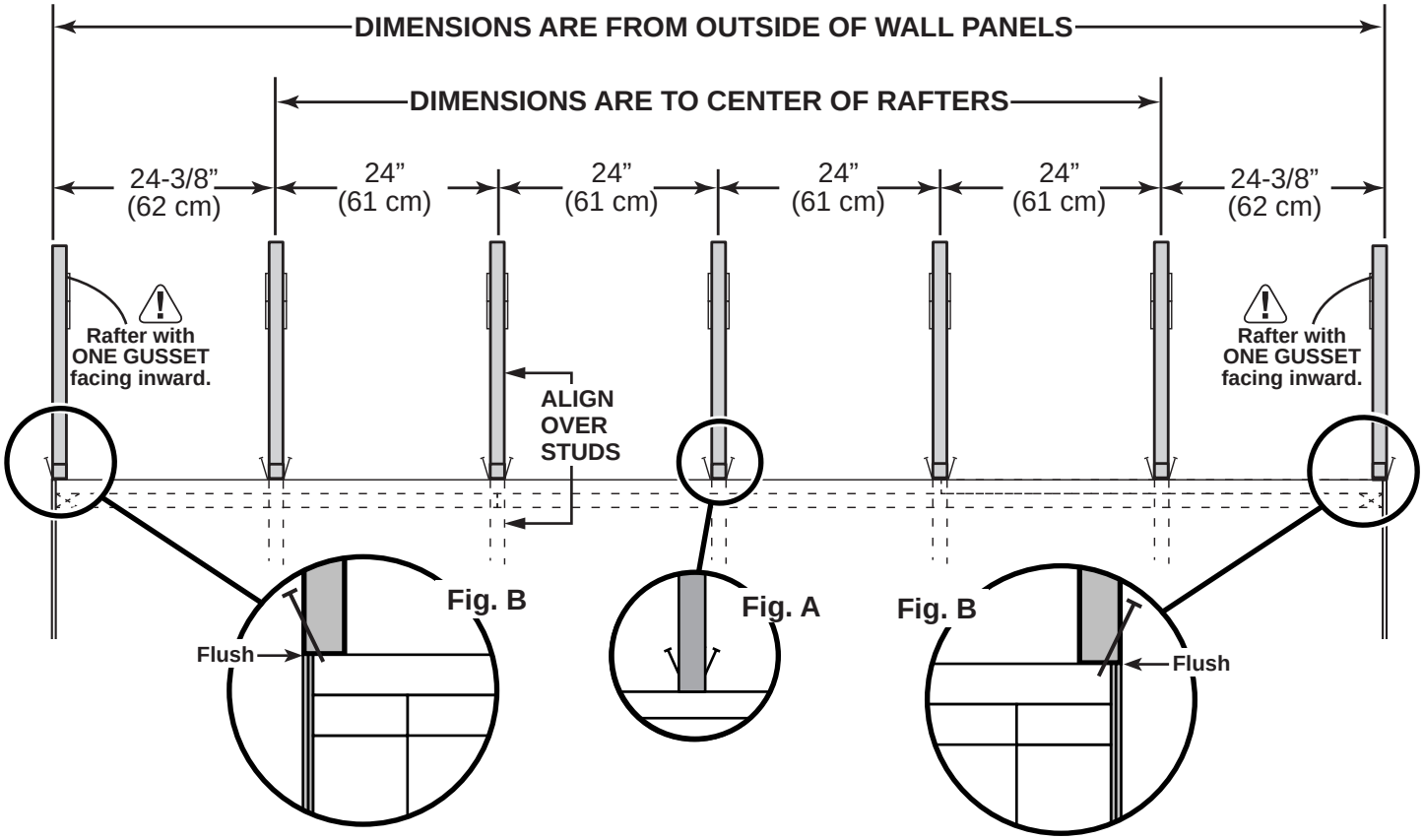

FINISH

Your rafters are now installed

GABLE UNITS

PARTS REQUIRED:

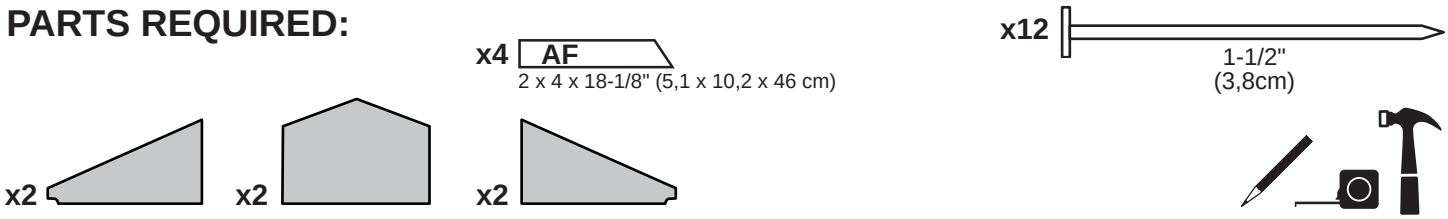

Install all gable panels with the primed side facing up.

BEGIN

1 Orient (2) **AF** on flat side as shown.
Place center gable panel on **AF**.
Secure with 1-1/2" nails.

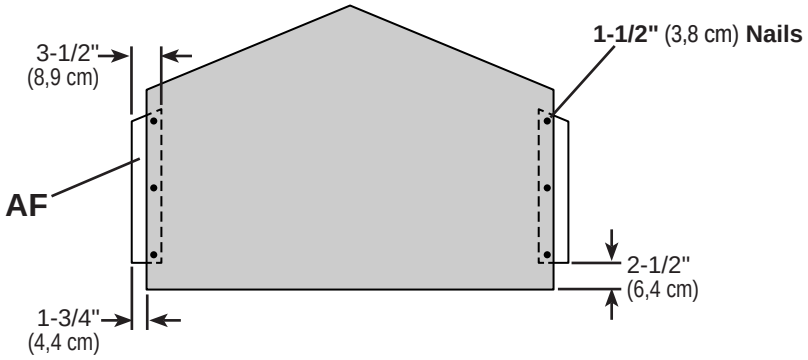

2 Place left and right gable panels on **AF** flush to center panel.
Secure with 1-1/2" nails.
Mark the center of the middle panel.

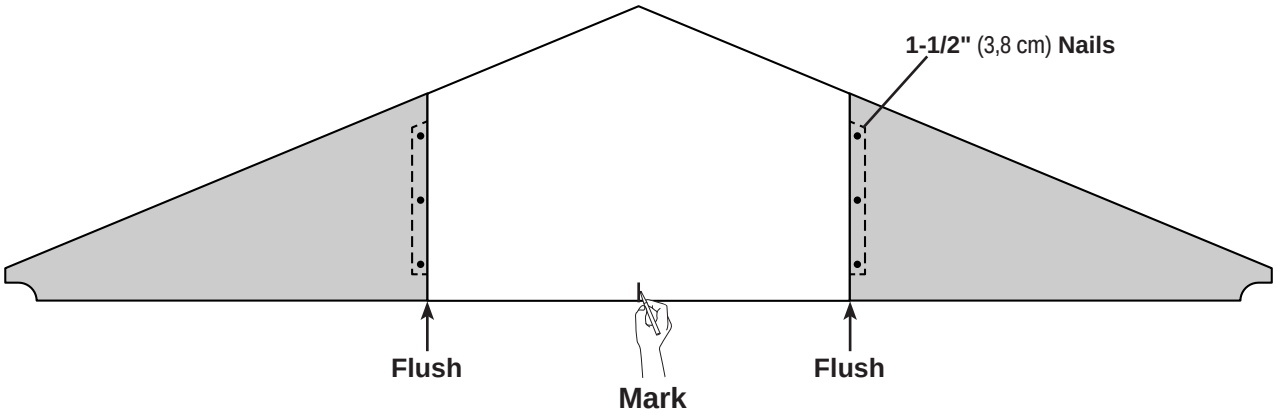

Repeat steps to build the second gable panel unit.

GABLE UNIT INSTALLATION

PARTS REQUIRED:



x2 Pre-assembled

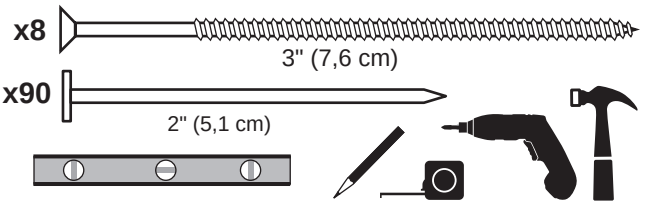

BEGIN



1 Lift and set gable unit on wall doubler.
Measure 1-1/2" (3,8 cm) down from top plate doubler and mark at each side as shown.
Hold secure with (1) 1-1/2" nail on each side.

⚠ **ENSURE GABLE IS CENTERED ON WALL BEFORE NAILING.**

Continue nailing lower edge of panels into top plate doublers with 1-1/2" nails spaced 6" apart.

2 Secure panels to rafter with 1-1/2" nails spaced 6" apart.

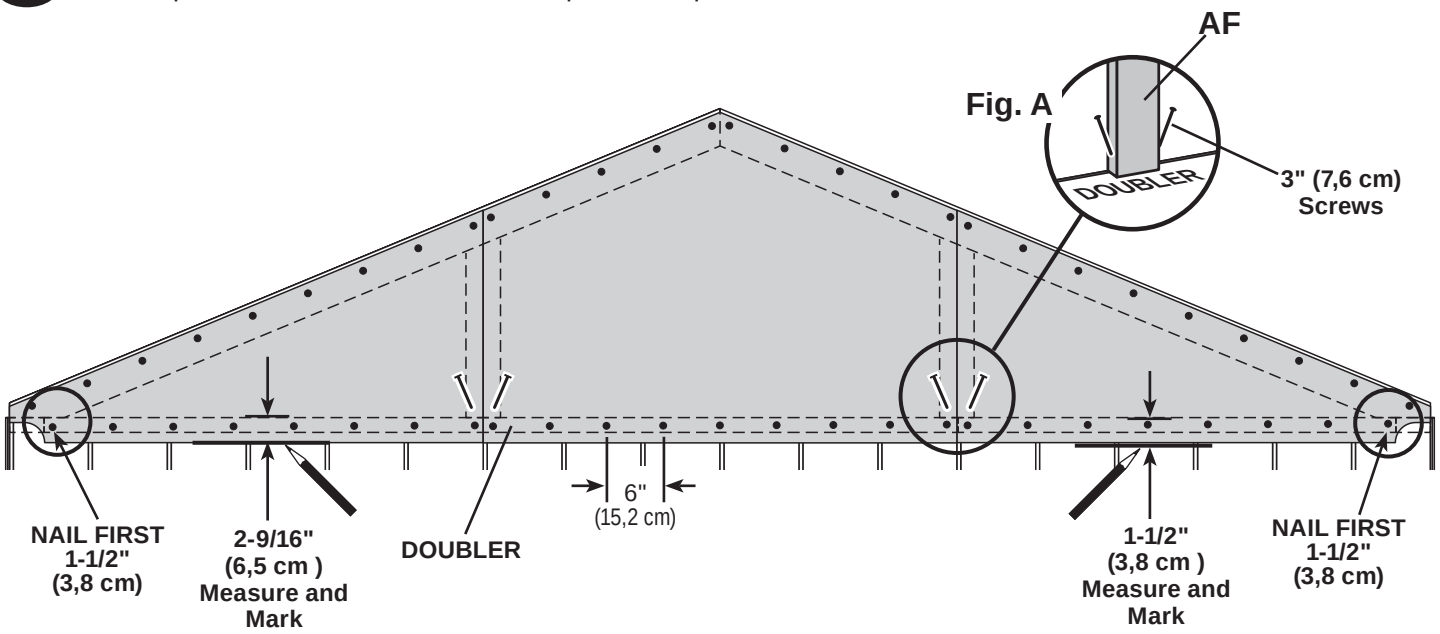

3 Working inside, secure gable unit with (2) 3" screws toe-screwed into each **AF** at an angle **(Fig. A)**.

Repeat steps to install gable unit on the opposite side.

FINISH

Your gable units are now installed.

ROOF PANELS

PARTS REQUIRED:



3/4" GAUGE BLOCK

x1



7/16 x 48 x 96"
(1,1 x 121,9 x 243,8 cm)

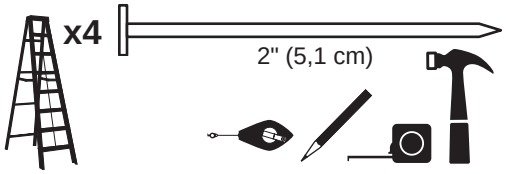

Roof panels may cause serious injury until securely fastened.
Install all roof panels with the rough side facing up (painted grid lines side).

BEGIN

1 Install the **48 x 96"** panel first. Use the gauge block to ensure the 3/4" measurement on the rafter **(Fig A)**, and that the panel is flush at the peak **(Fig. B)**.

Secure the panel with (2) 2" nails in the corners.

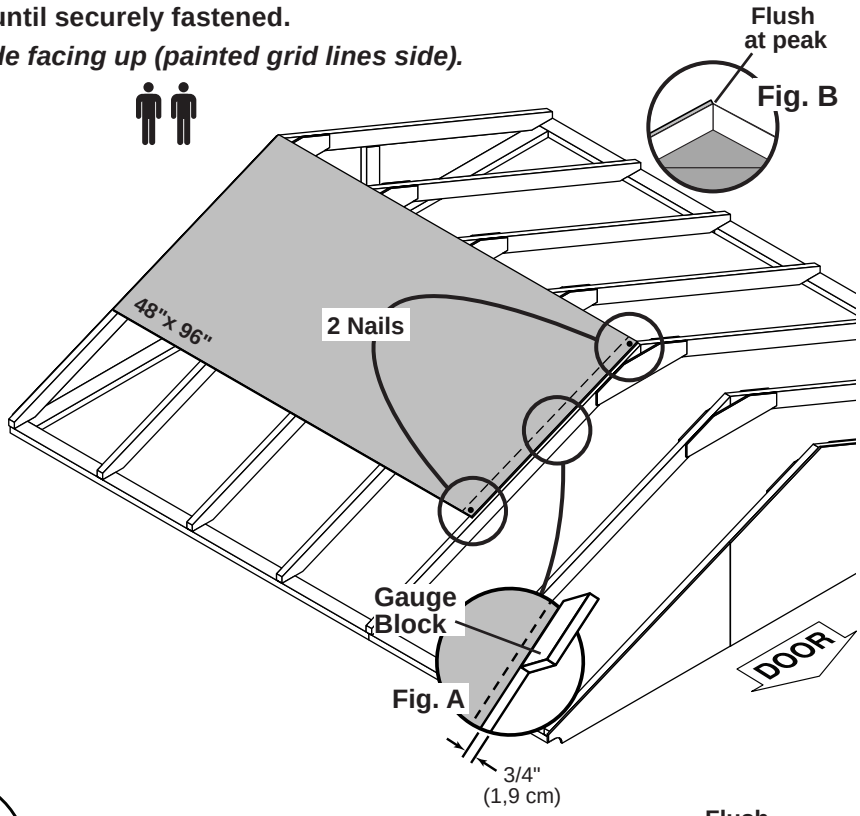

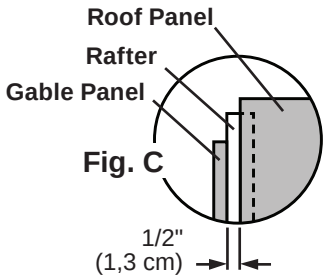

2 Move to the opposite end. Using the long edge of the panel as a lever, move the panel side-to-side until the top corner is flush at the peak **(Fig. B)**,

Adjust the back gable panel for the 1/2" measurement **(Fig. C)**.

Secure panel with (2) 2" nails in the corners.

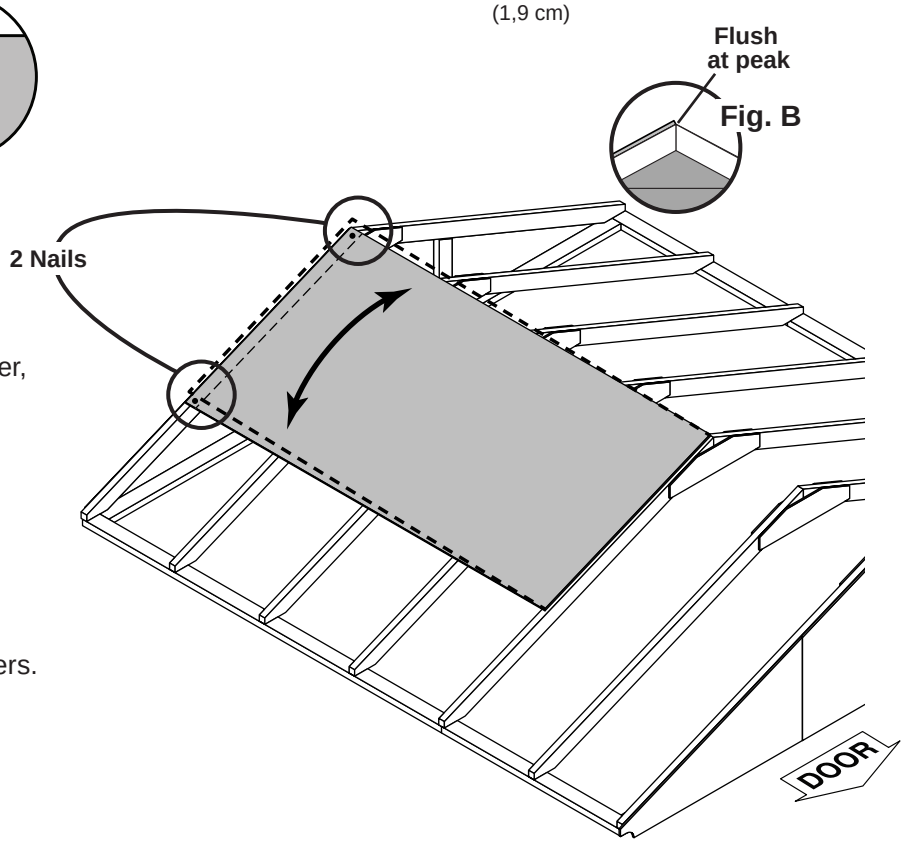

ROOF PANELS

PARTS REQUIRED:

x1



7/16 x 47-7/8 x 48"
(1,1 x 121,6 x 121,9 cm)

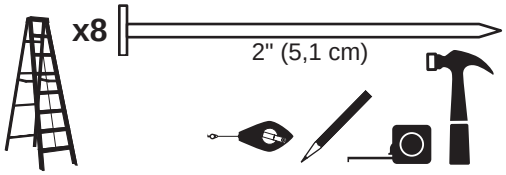

3 Install the **47-7/8" x 48"** panel flush to the installed panel and flush at the peak **(Fig. B)**.

Secure panel with (2) 2" nails in the corners.

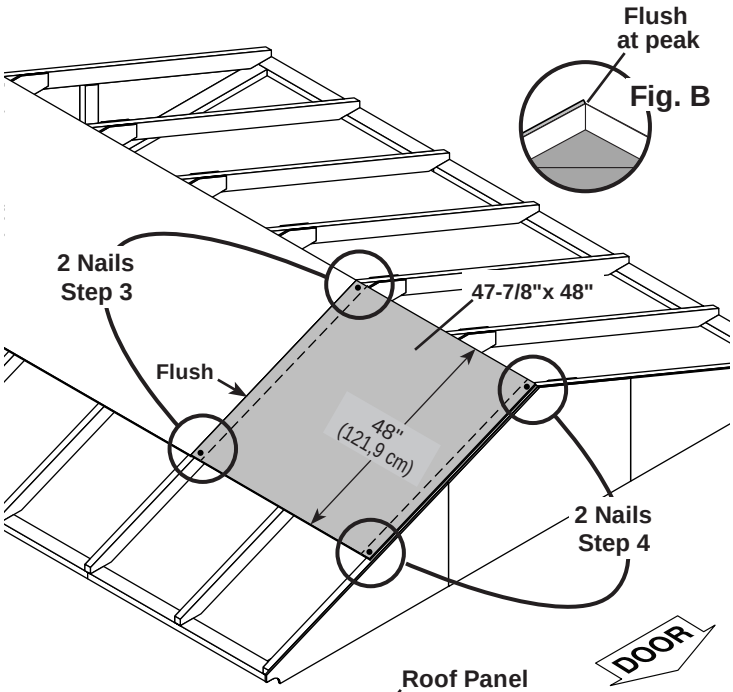

4 Move to the opposite end.
Move the panel side-to-side until the top corner is flush at the peak
(Fig. B),

Adjust the front gable panel for the 1/2" measurement **(Fig. C)**.

Secure panel with (2) 2" nails in the corners.

5 Ensure and adjust the spacing between the centers of the rafters. Measure from gable panels at each end of roof **(Fig. D)**.

Secure rafters with (1) 2" nail into each rafter **(Fig. E)**.

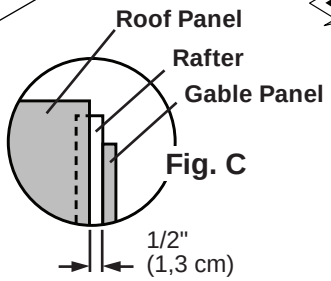

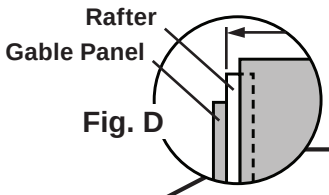

NOTE: Measurements are from inside of panels

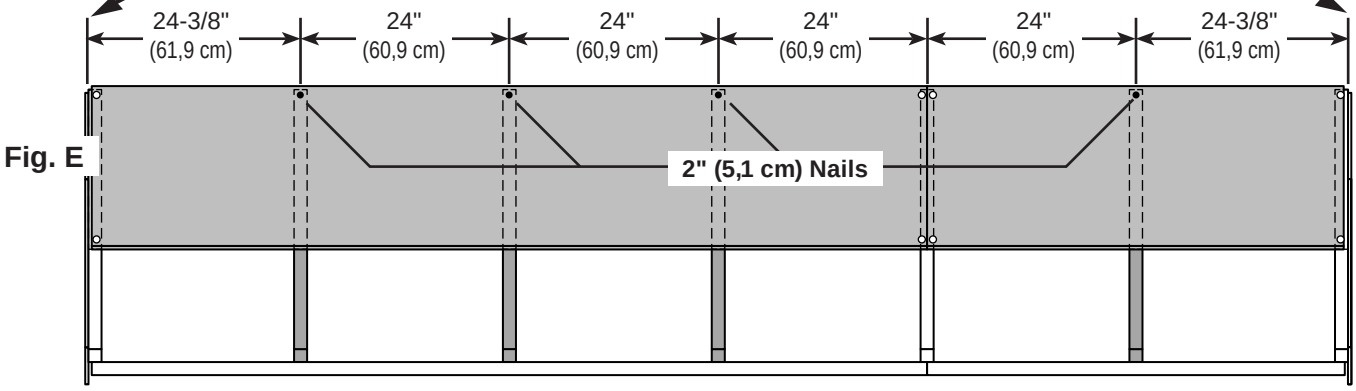

ROOF PANELS

PARTS REQUIRED:

x1 — 7/16 x 36-1/2 x 48" (1,1 x 92,7 x 121,9 cm)

x1 — 7/16 x 36-1/2 x 96" (1,1 x 92,7 x 243,8 cm)





3/4" GAUGE BLOCK

x164 — 2" (5,1 cm)

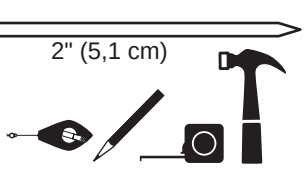

6 Install the **36-1/2" x 96"** roof panel flush to the upper panels.
Use the gauge block to ensure the 3/4" measurement on the rafter **(Fig A)**.

Secure the panel with 2" nails spaced 6" apart on edges and 12" apart inside panel.

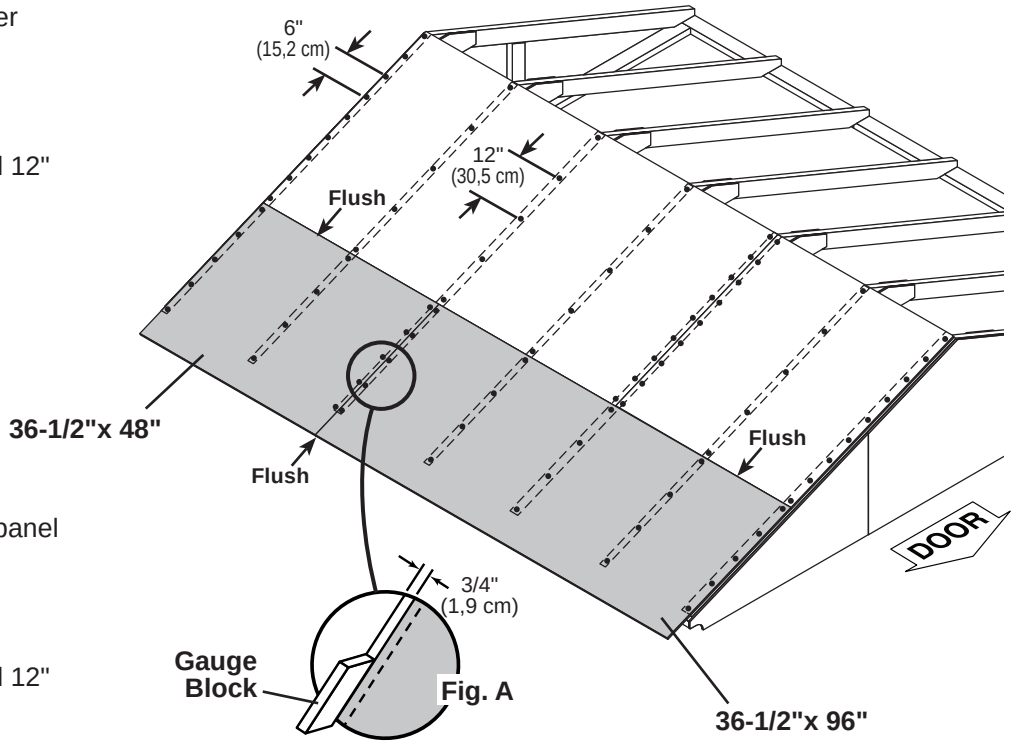

7 Install the **36-1/2" x 48"** roof panel flush to the installed panels.

Secure the panel with 2" nails spaced 6" apart on edges and 12" apart inside panel.

Repeat process to install roof panels on the opposite side.

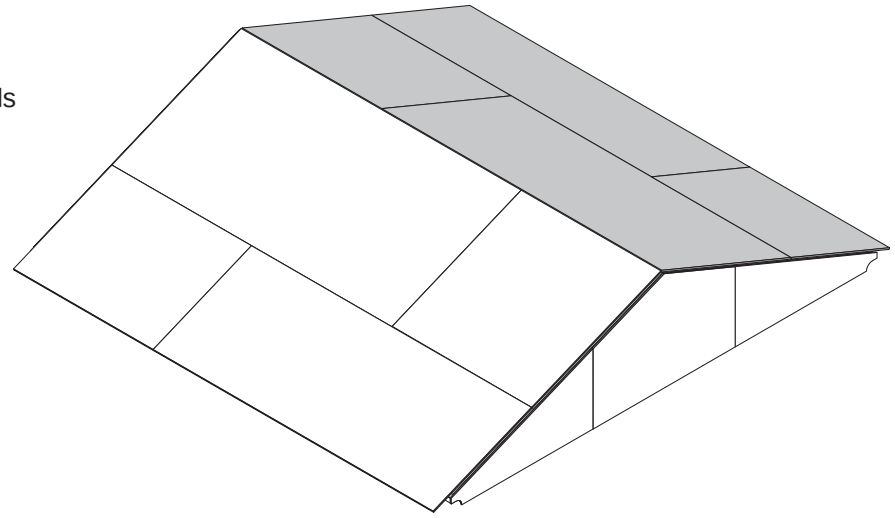

FINISH

Your roof panels are now installed.

GABLE TRIM

PARTS REQUIRED:

x2 **CQR**
19/32" x 3-1/2" x 84-15/16" (1,5 x 8,9 x 215,7 cm)

x2 **CQL**
19/32" x 3-1/2" x 84-15/16" (1,5 x 8,9 x 215,7 cm)

x48 2" (5,1 cm)

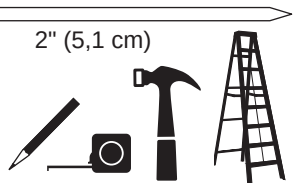

BEGIN

1 Install front gable trim **CQR** and **CQL** flush to top of roof panels and flush at peak as shown **(Fig. A)**.

Secure trim with 2" finishing nails spaced evenly, approx. 7-1/4" (19,1 cm) apart.

Repeat above steps to install the back wall gable trim.

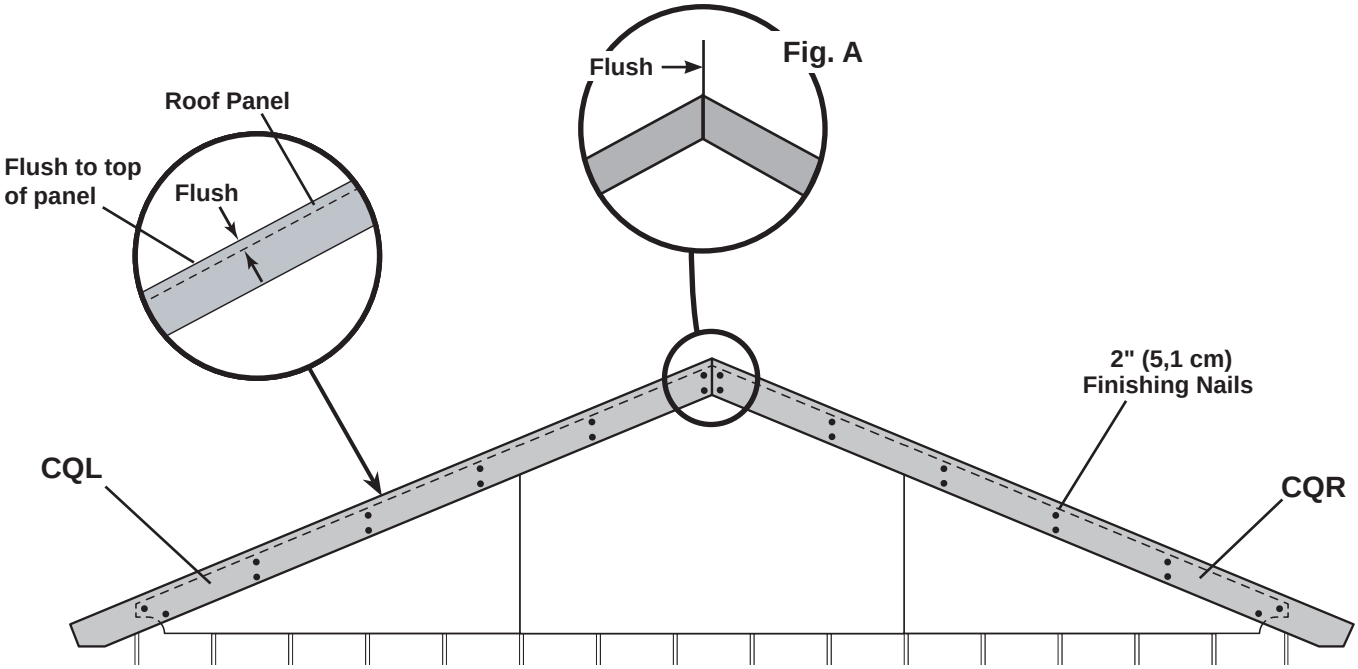

FINISH

Your gable trim is now installed.

EAVE TRIM

PARTS REQUIRED:

x2 **VX**
2 x 6 x 96" (5,1 x 15,2 x 243,8 cm)

x2 **AS**
2 x 6 x 49-1/2" (5,1 x 15,2 x 125,7 cm)

x8
3" (7,6 cm)

x60
1-1/4" (3,2 cm)

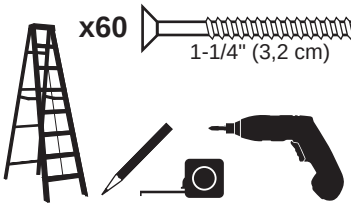

BEGIN

1 Place **VX** eave trim flush along edge of roof panel **(Fig. A)**.

Screw through roof panel into **VX** with 1-1/4" screws approximately 7-1/2" apart, as shown.

2 Install **AS** flush to edge of roof panel and flush to installed eave trim **VX**.

Screw through roof panel into **AS** with 1-1/4" screws approximately 7-1/2" apart, as shown.

Repeat installation on opposite side.

Fig. A

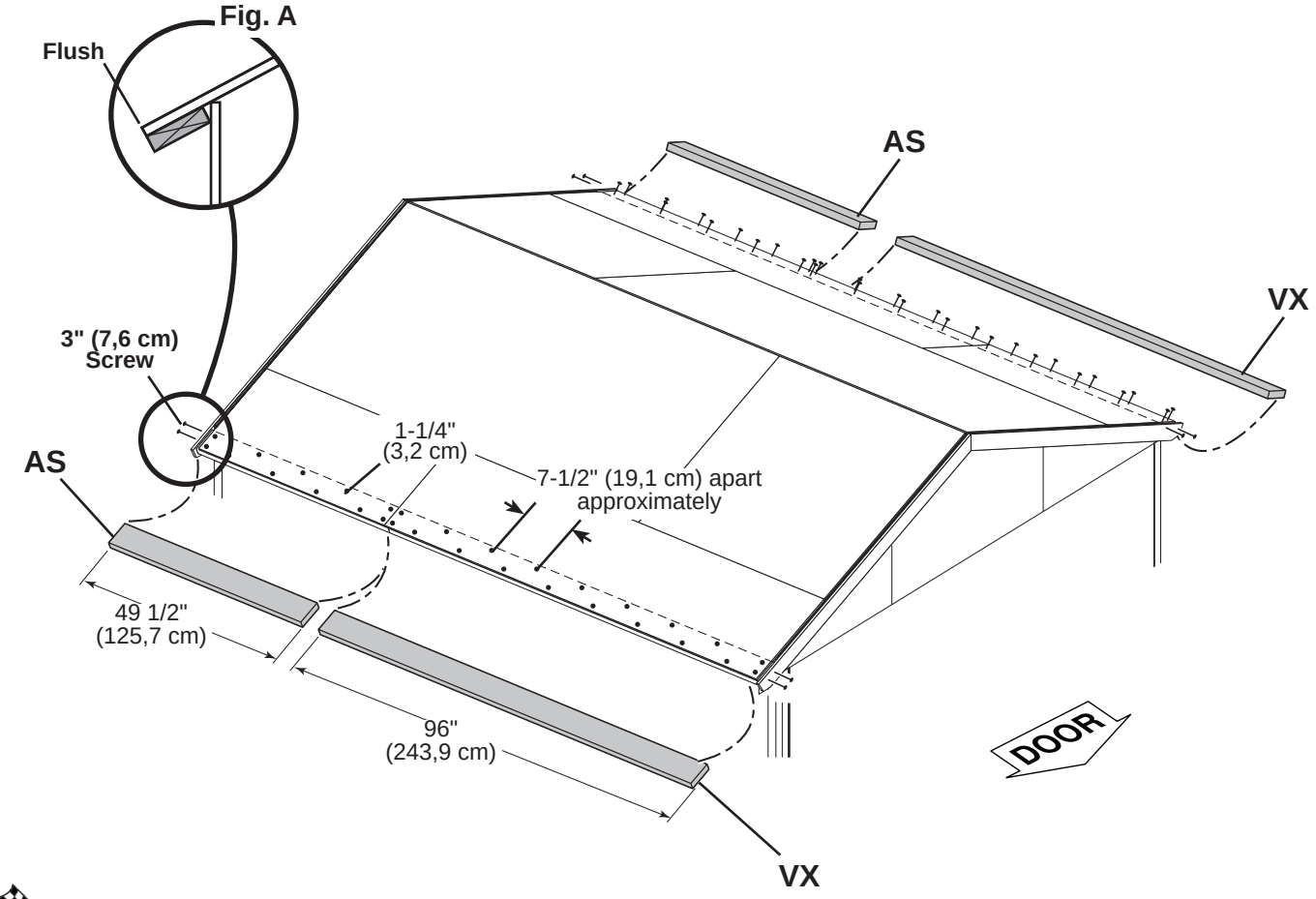

FINISH

Your eave trim in now installed.

CORNER TRIM

PARTS REQUIRED:

x8 3/8" x 1-3/4" x 83-1/2" (1 x 4,5 x 212,1 cm)

x64 2" (5,1 cm)

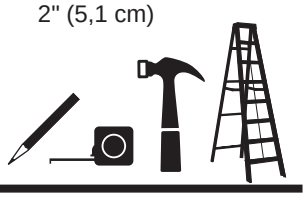

BEGIN

1 Install gable end **83-1/2"** corner trim under gable panel, **(Fig. A)** and flush to eave wall panel **(Fig. B)**. Secure with 2" finishing nails spaced evenly.

2 Install eave side **83-1/2"** corner trim flush to eave soffit and flush along seam of installed corner trim **(Fig. C)**. Secure with 2" finishing nails spaced evenly.

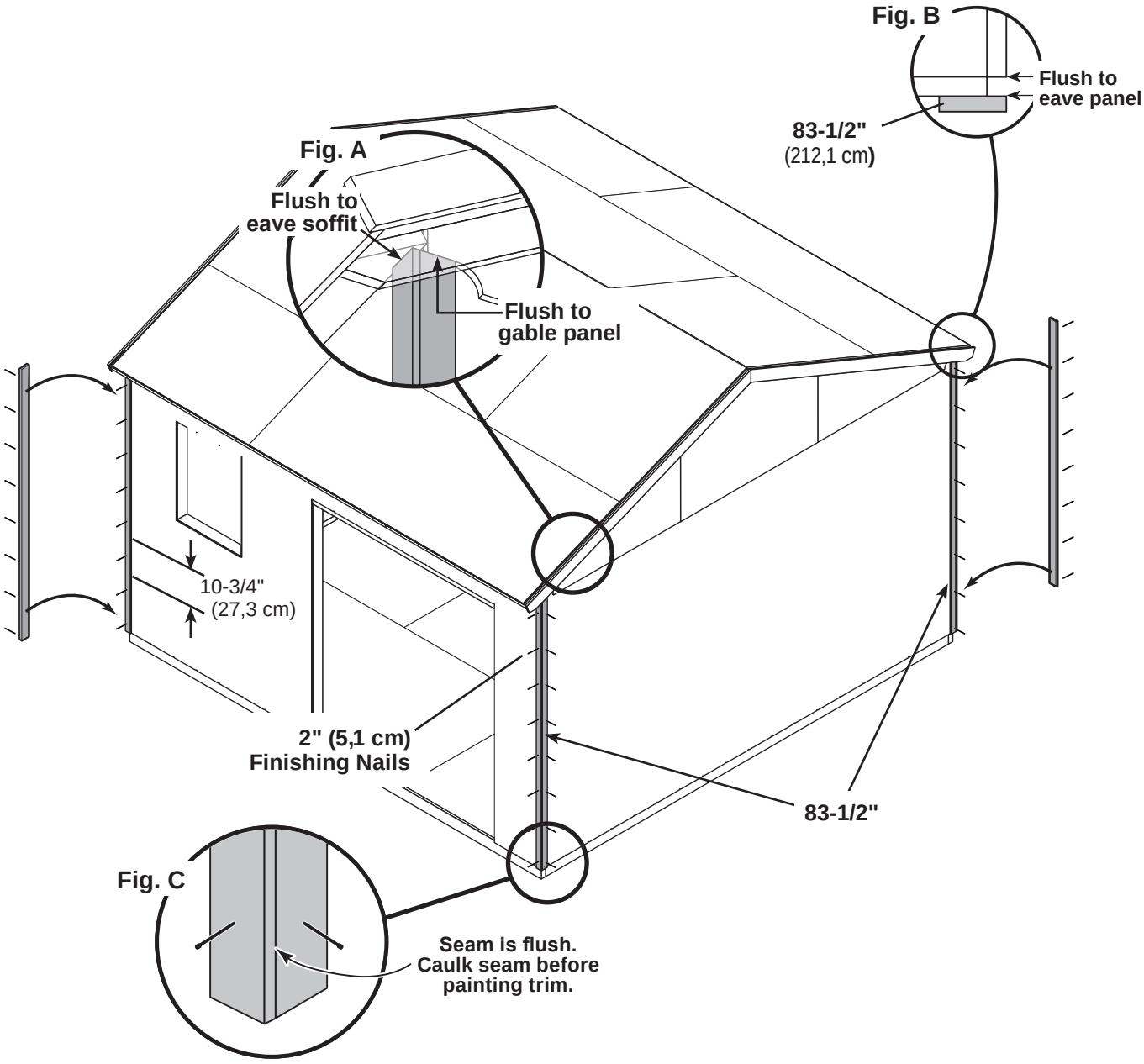

Repeat steps for each corner of shed.

FINISH

Your corner trim is now installed.

COLLAR TIE

PARTS REQUIRED:

x1 **TP**
2 x 4 x 96" (5,1 x 10,2 x 243,9 cm)

x6

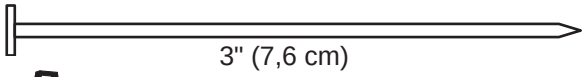

3" (7,6 cm)

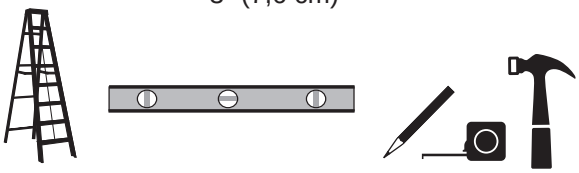

BEGIN

1 Locate collar tie **TP** on the rafter which is centered over the door.

Secure **TP** with (3) 3" nails at each end.

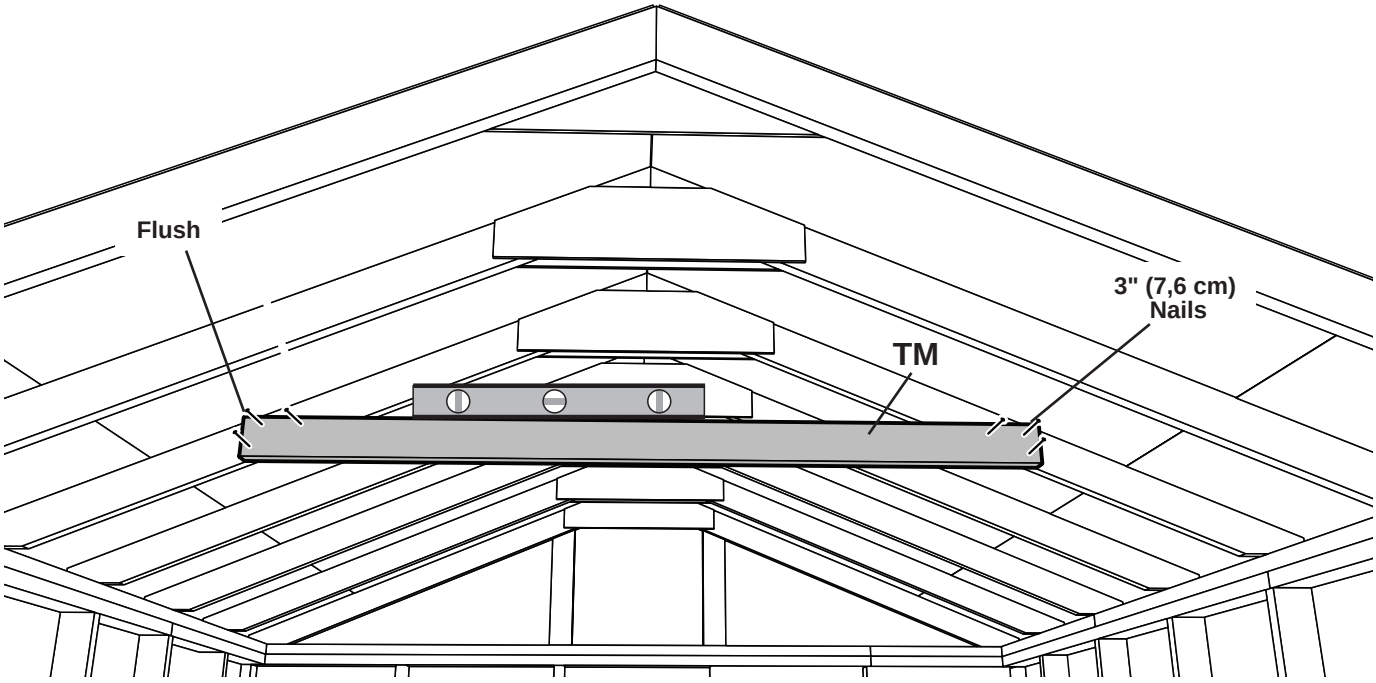

FINISH

Your collar tie is now installed.

LOFT JOISTS

PARTS REQUIRED:

x56

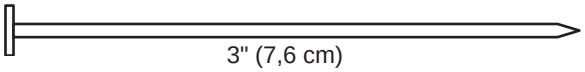

3" (7,6 cm)

x4 **TP**
2 x 4 x 96" (5,1 x 10,2 x 243,8 cm)

x4 **SP**
2 x 4 x 48" (5,1 x 10,2 x 122 cm)

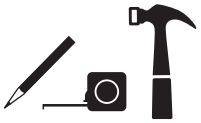

BEGIN

1 Ensure parts **TP** and **SP** are aligned perfectly on a flat surface. Assemble joist with 3" nails in a staggered pattern.

2 Turn assembled joist over and repeat staggered nail pattern.

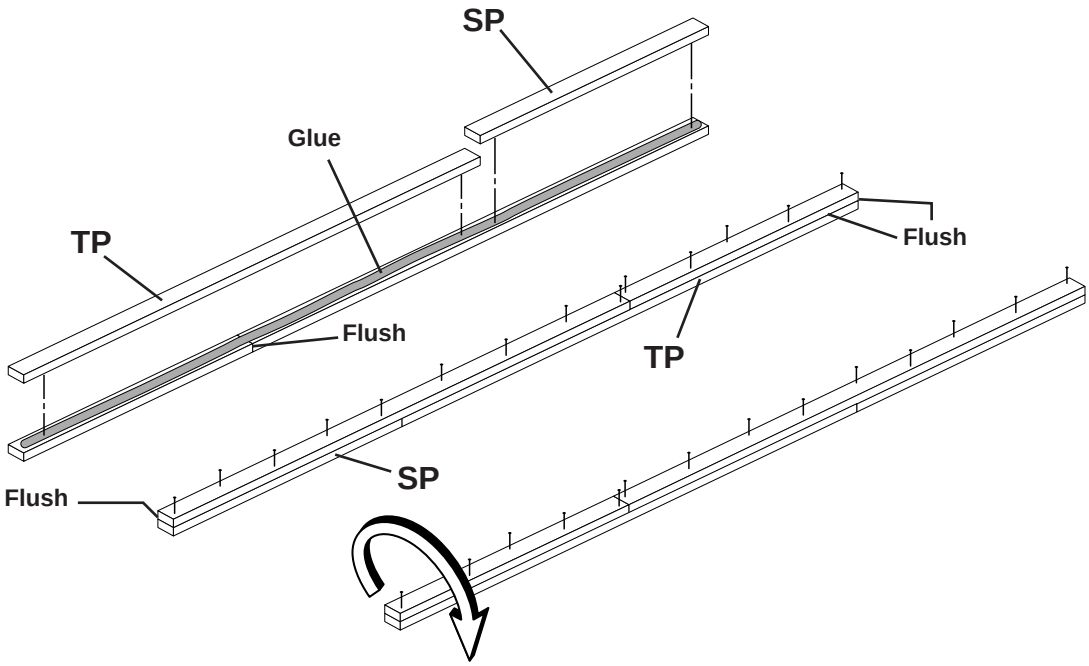

Repeat steps to assemble a second loft joist.

LOFT JOISTS

PARTS REQUIRED:

x1 **PYA**
2 x 4 x 19-3/4" (5,1 x 10,2 x 50,2 cm)

x2 **AO**
2 x 4 x 22-1/2" (5,1 x 10,2 x 57,1 cm)

x1 **NK**
2 x 3 x 48" (5,1 x 7,6 x 121,9 cm)

x1 **PT**
2 x 3 x 96" (5,1 x 7,6 x 243,8 cm)

x22
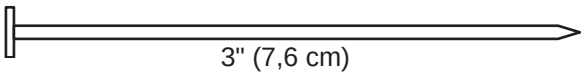
3" (7,6 cm)

x6
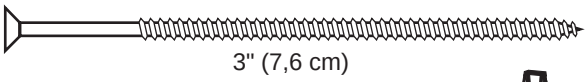
3" (7,6 cm)

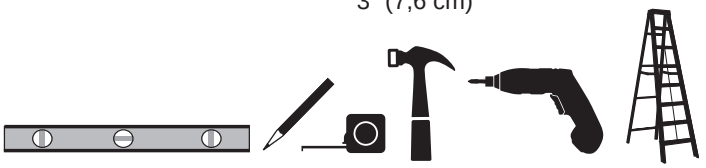

4 Install loft support parts **NK** and **PT** level across left wall studs. Flush parts under front and back wall top plates. Ensure 77-1/2" (196,8 cm) between floor deck and the seam.
Secure parts with (2) 3" nails in each stud.

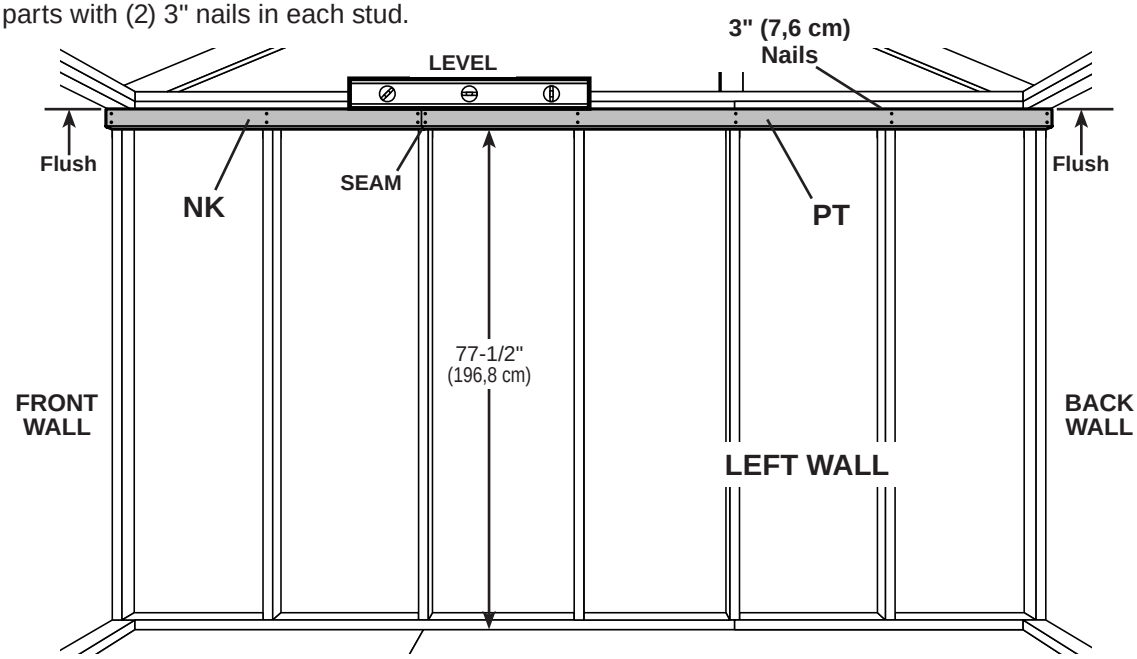

5 Install parts **PYA** and **AO** between back wall studs at measurement shown below top plate and flush to wall panel **(Fig. A)**.
Secure parts with (2) 3" nails in **AO** and (6) 3" screws as shown.

Pre-drilling is suggested for screws.

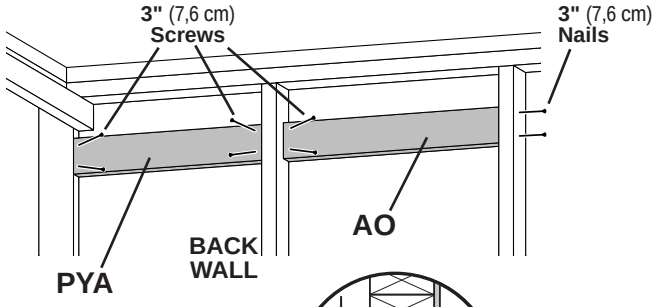

Fig. A

6 Install part **AO** between front wall studs above window opening at measurement shown below top plate and flush to wall panel **(Fig. A)**.
Secure with 3" nails.

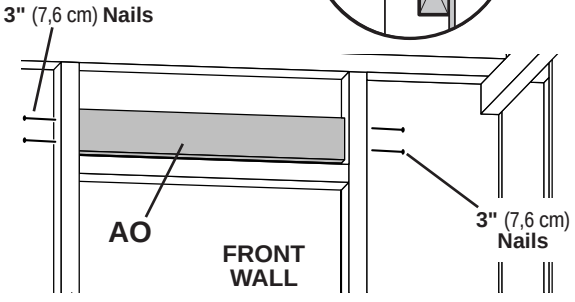

LOFT JOISTS

PARTS REQUIRED:

x12 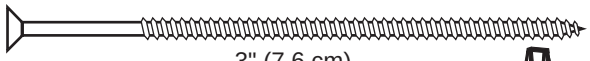

3" (7,6 cm)

x2	LOFT JOIST ASSEMBLY	

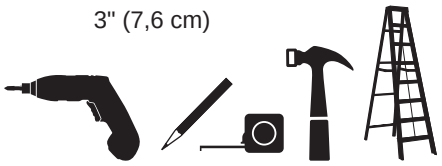

7 Place loft joists on top of joist supports **PYA** and **AO**.

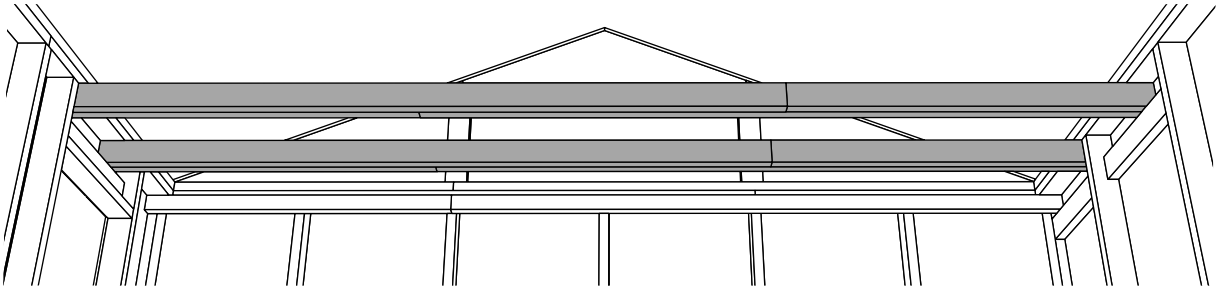

Measure and mark 17-3/8" (44,1 cm) and 14-2/8 (24,4 cm) for joist positions at front and back walls. Secure joists with 3" screws as shown below.

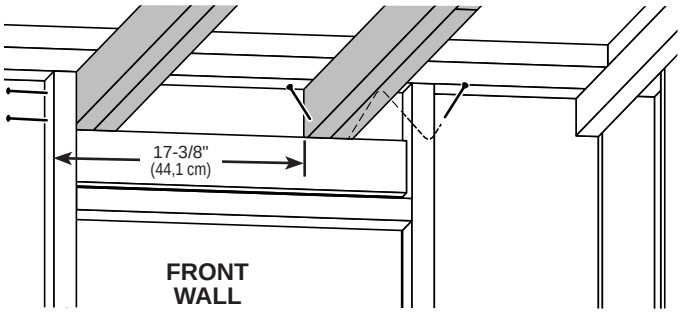

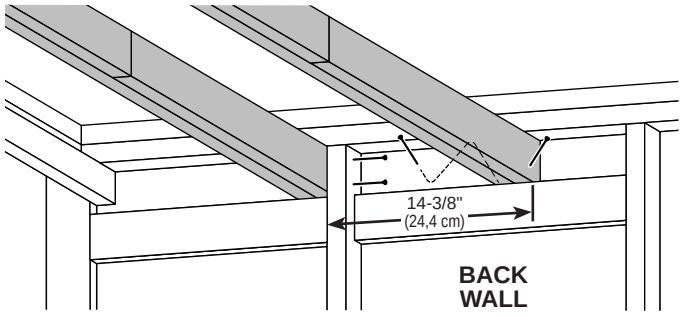

BENCH INSTALLATION

PARTS REQUIRED:

x6
3/8 x 8 x 12-1/2" (1 x 20,3 x 31,8 cm)

x7 LR
2 x 3 x19" (5,1 x 7,6 x 48,3 cm)

x2
3" (7,6 cm)

x36
2" (5,1 cm)

BEGIN

1 Assemble (6) shelf supports as shown. Install six **LR** to shelf panels using (3) 2" nails.
Secure one **LR** to front wall studs with (2) 3" nails as shown.
Secure shelf supports at shown measurement above floor with (3) 2" nails.

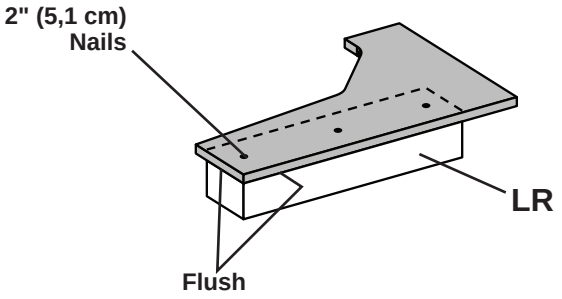

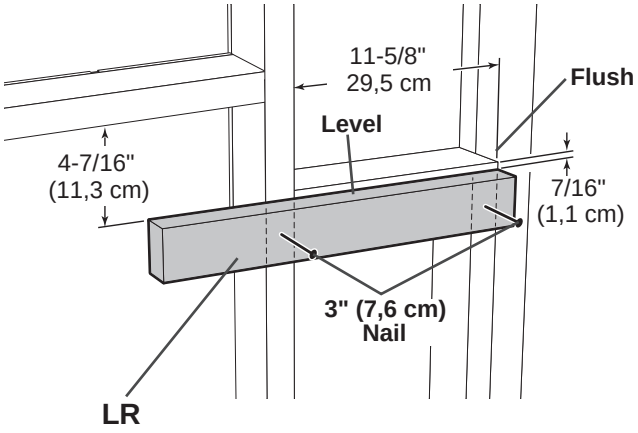

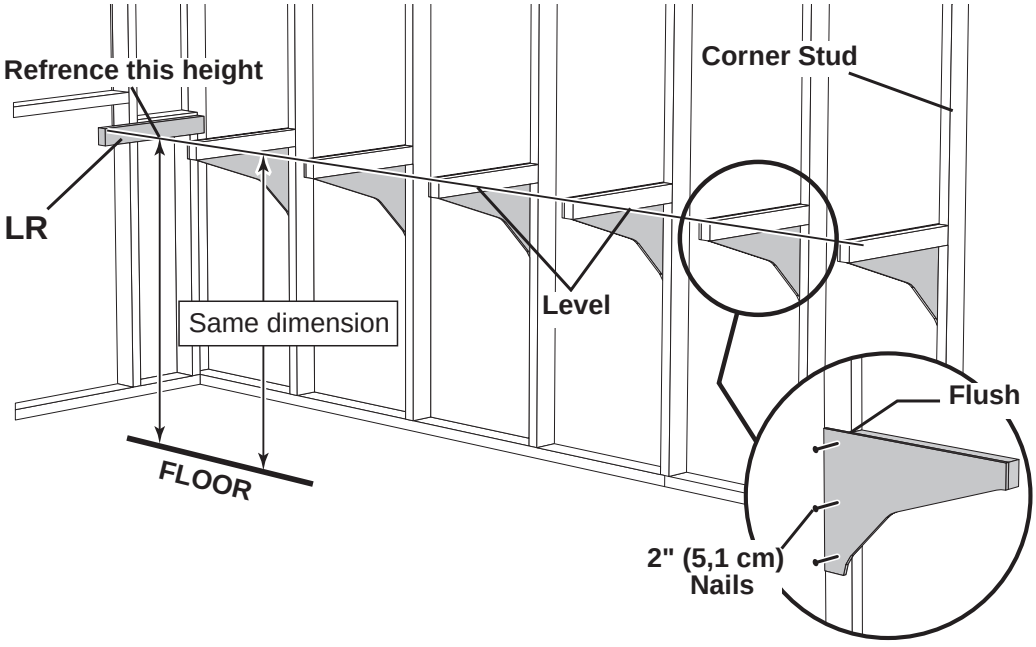

BENCH PANELS / PEG BOARD

PARTS REQUIRED:

x1 — 7/16 x 19-1/2 x 92-1/2" (1,1 x 49,5 x 235 cm)

x1 — **7/16 x 19-1/2 x 48"** (1,1 x 49,5 x 121,9 cm)

x1 — **KP**
1 x 4 x 96" (2,5 x 10,2 x 243,8 cm)

x1 — **HYA**
1 x 4 x 44-1/2" (2,5 x 10,2 x 113 cm)

x1 — 3" (7,6 cm)

x62 — 2" (5,1 cm)

x1 — 1/4 x 23-7/8 x 96" (0,6 x 60,6 x 243,8 cm) Peg board

x1 — 1/4 x 23-7/8 x 48" (0,6 x 60,6 x 121,9 cm) Peg board



BEGIN

1 Install bench panels centered over shelf supports. Secure with (3) 2" nails at each support.

2 **Secure HYA and KP** with (2) 2" nails at each support and (4) 2" nails at seams.
Secure the end of KP with (1) 3" nail as shown

3 Secure pegboard with (3) 2" nails at each support and (6) 2" nails at seams.

Ensure pegboard is in contact with top of bench.

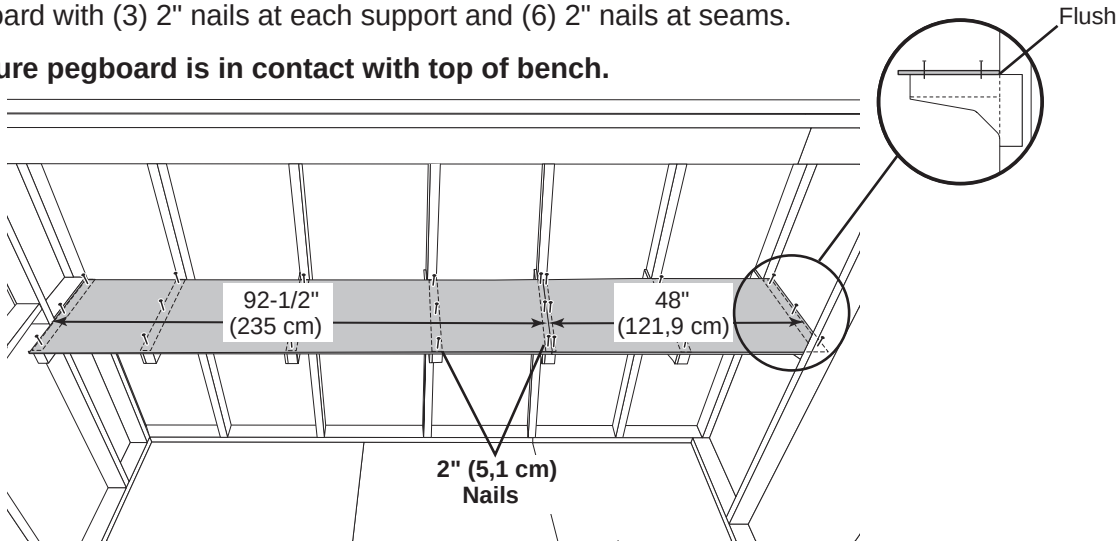

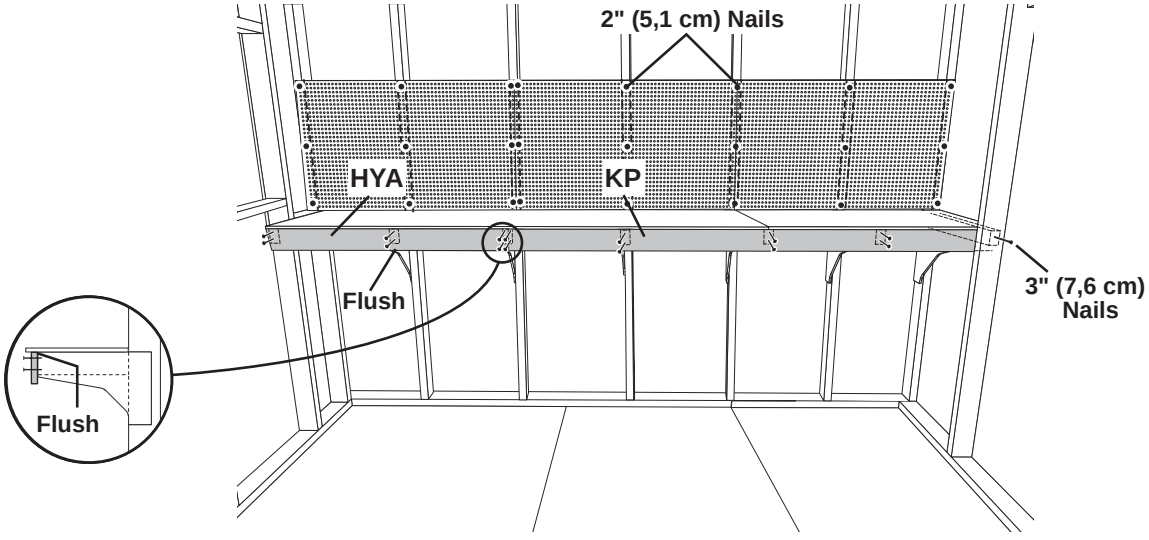

FINISH

Your bench and peg board are now installed.

SHELF ASSEMBLY

PARTS REQUIRED:

x7 **AC**
2 x 3 x10" (5,1 x 7,6 x 25,4 cm)

x1 **FO**
1 x 3 x 48" (2,5 x 7,6 x 121,9 cm)

x1 **BE**
1 x 3 x 96" (2,5 x 7,6 x 243,8 cm)

x32
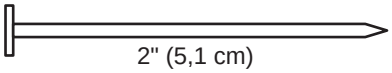
2" (5,1 cm)

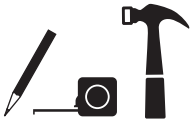

BEGIN

1 Secure **AC** to **BE** and **FO** with (2) 2" nails at each support and (4) 2" nails at the seam.

2 Secure shelf support as shown with (2) 2" nails at each wall stud.

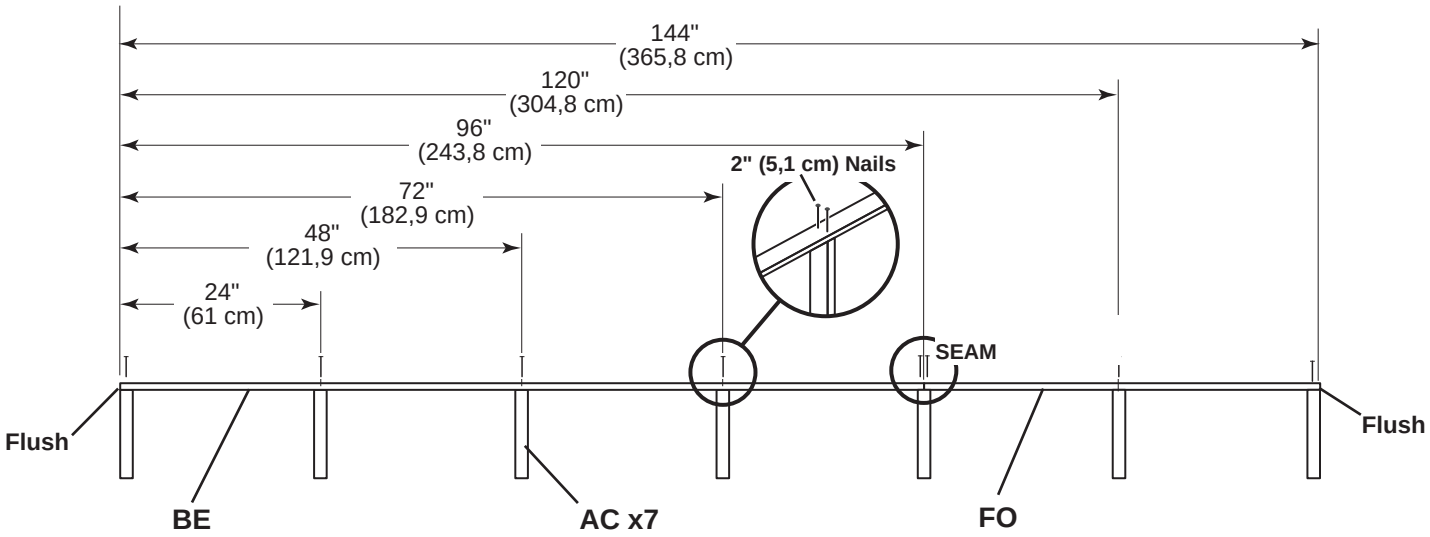

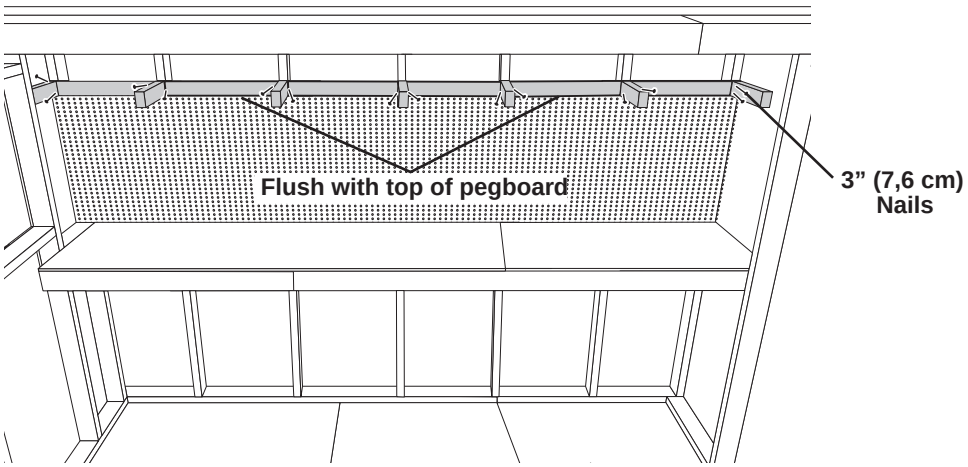

SHELF PANELS

PARTS REQUIRED:

x1 — 7/16 x 11-1/2 x 96" (1,1 x 21,2 x 243,8 cm)

x1 — 7/16 x 11-1/2 x 48" (1,1 x 21,3 x 121,9 cm)

x1 **KP** — 1 x 4 x 96" (2,5 x 10,2 x 243,8 cm)

x1 **WJ** — 1 x 4 x 48" (2,5 x 10,2 x 121,9 cm)

x30 — 2" (5,1 cm)

x1 — 3" (7,6 cm)

x3 — 1-1/2" (3,8 cm)

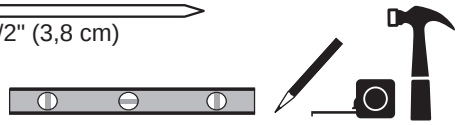

3 Install shelf panels centered over shelf supports. Secure with (2) 2" nails at each support.

4 Secure **WJ** and **KP** with (2) 2" nails at each support and (3) 2" nails at seam.

5 Secure shelf from oustide of the front wall panel using 1-1/2" nails at measurments shown.

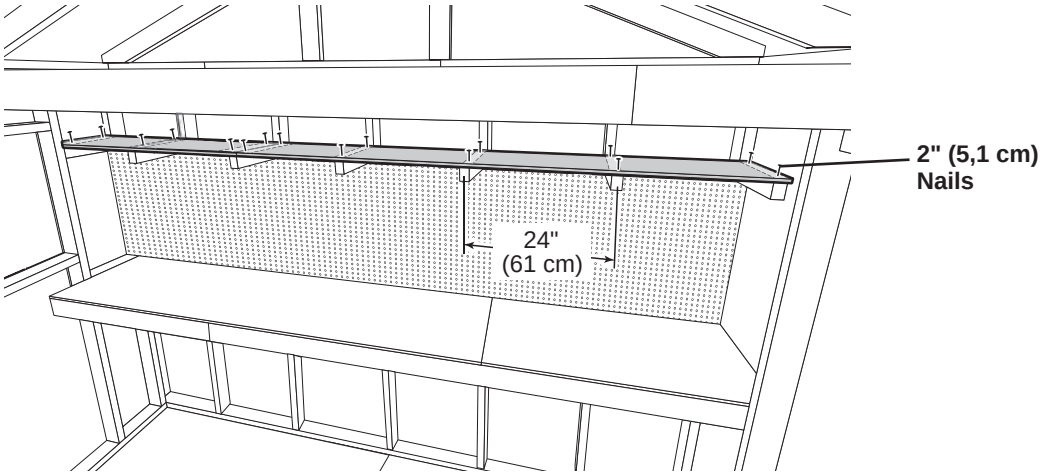

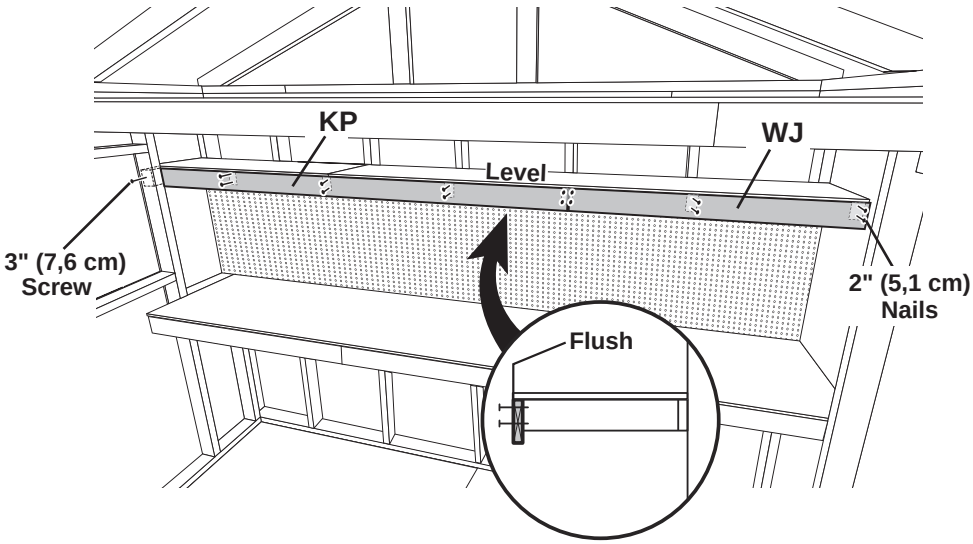

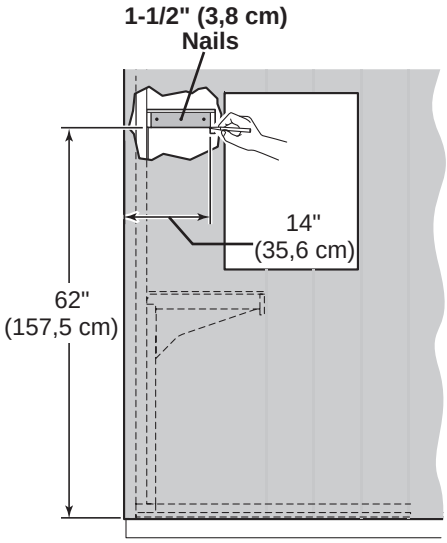

FINISH

Your shelf is now installed.

LOFT PANELS

PARTS REQUIRED:

x57

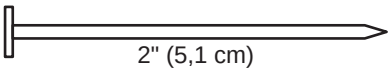

2" (5,1 cm)

x1



22-3/8" x 40-7/8" (56,9 x 104 cm)

x1



22-3/8" x 96" (56,9 x 244 cm)



BEGIN

1 Install loft panels centered over loft joists and loft support board. Secure with 2" nails spaced 8" apart.

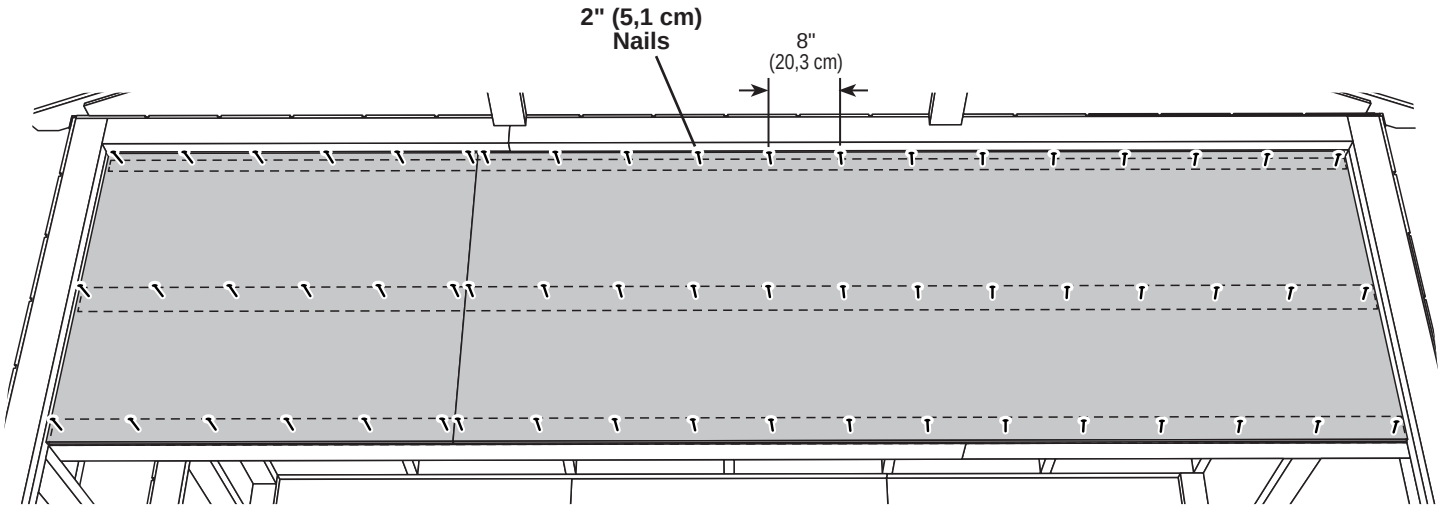

FINISH

Your loft deck is now installed.

DOORS

PARTS REQUIRED:

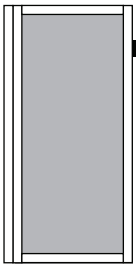

x1 Left Door

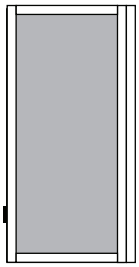

x1 Right Door

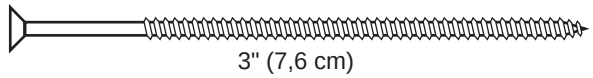

x4 3" (7,6 cm)

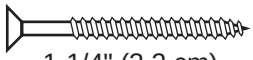

x2 1-1/4" (3,2 cm)

x1 GAA
1 x 3 x 5" (2,5 x 7,6 x 12,7 cm)

x1 OO *TEMPORARY SUPPORT*
69" (175,3) Door Stiffener

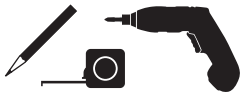

BEGIN

1 Place doors on flat surface. **3/8" offset is to top.**
Look for red (right) and green (left) on hinge board.

Install temporary supports **OO** and **GAA** as shown.

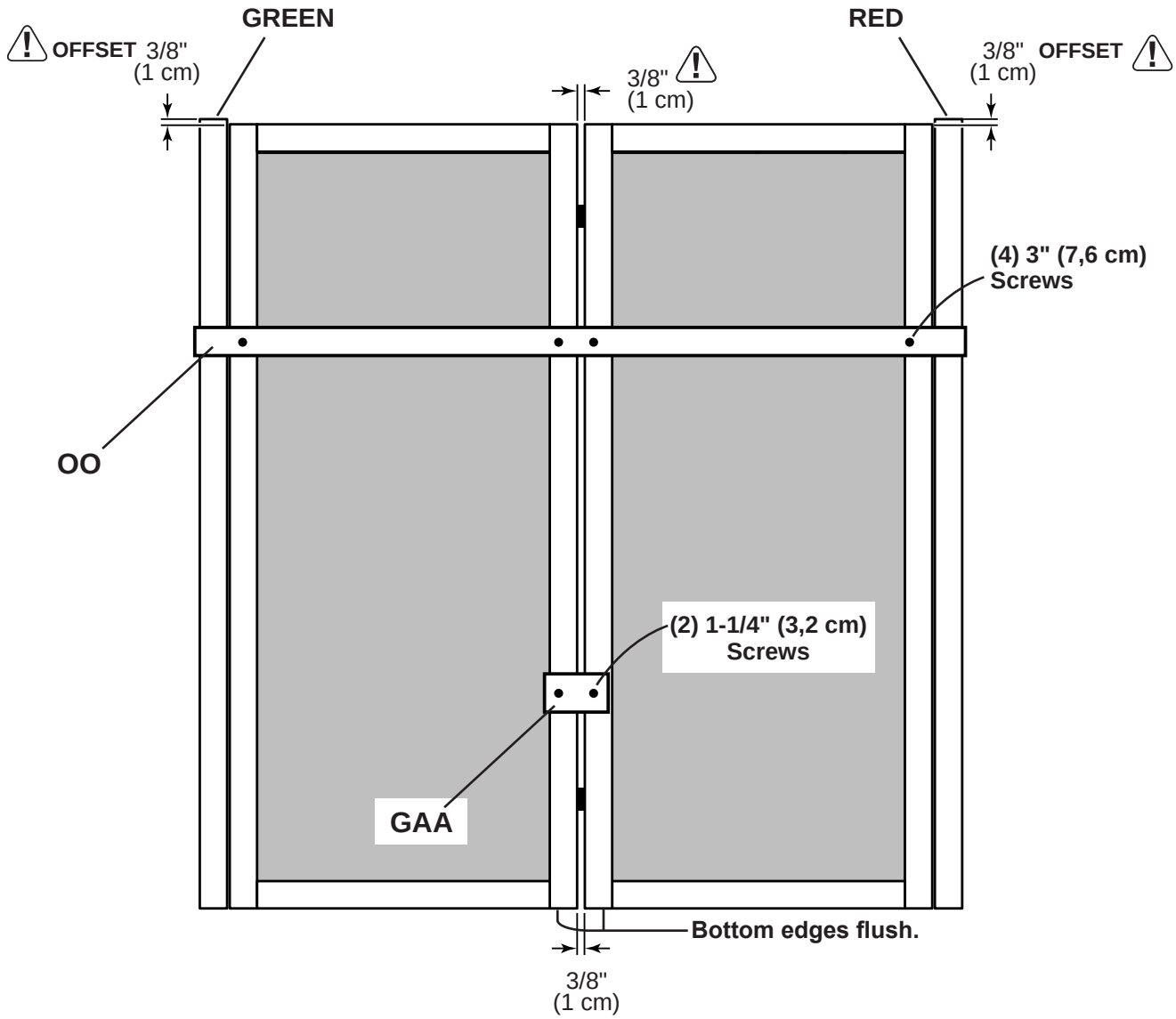

DOORS

PARTS REQUIRED:

x1 **OO** ***TEMPORARY SUPPORT***
69” (175,3) Door Stiffener

x10 3" (7,6 cm)

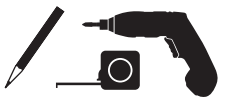

2 Install **OO** flush under panels.
Secure to floor frame with (2) 3" screws **(Fig. A)**.
Mark center of door opening, as shown.

Fig. A

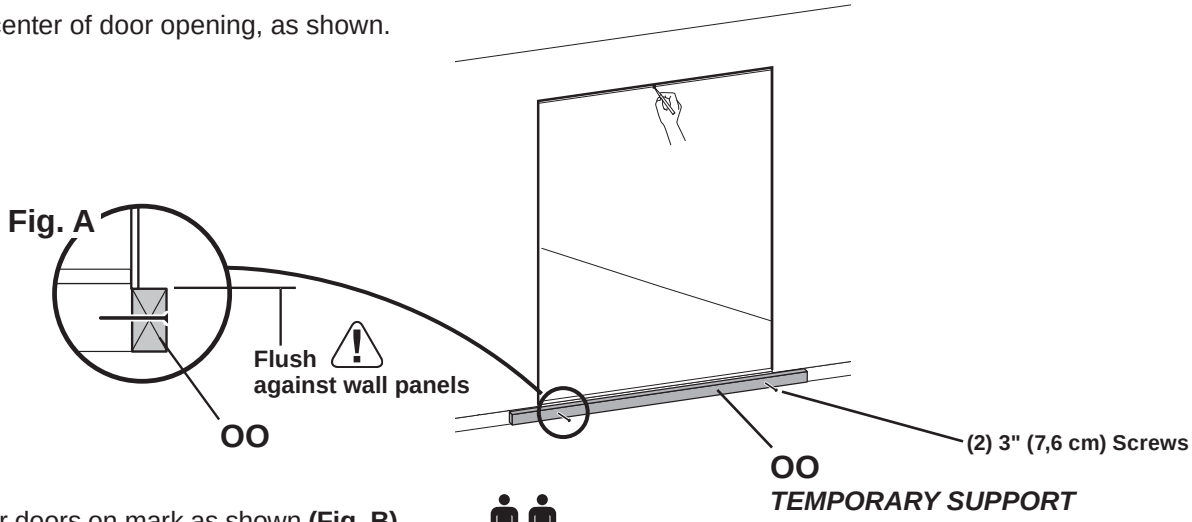

3 Center doors on mark as shown **(Fig. B).**

4 Screw hinge boards into wall supports with (8) 3" screws as shown.
Make sure screws go into framing.

Fig. B

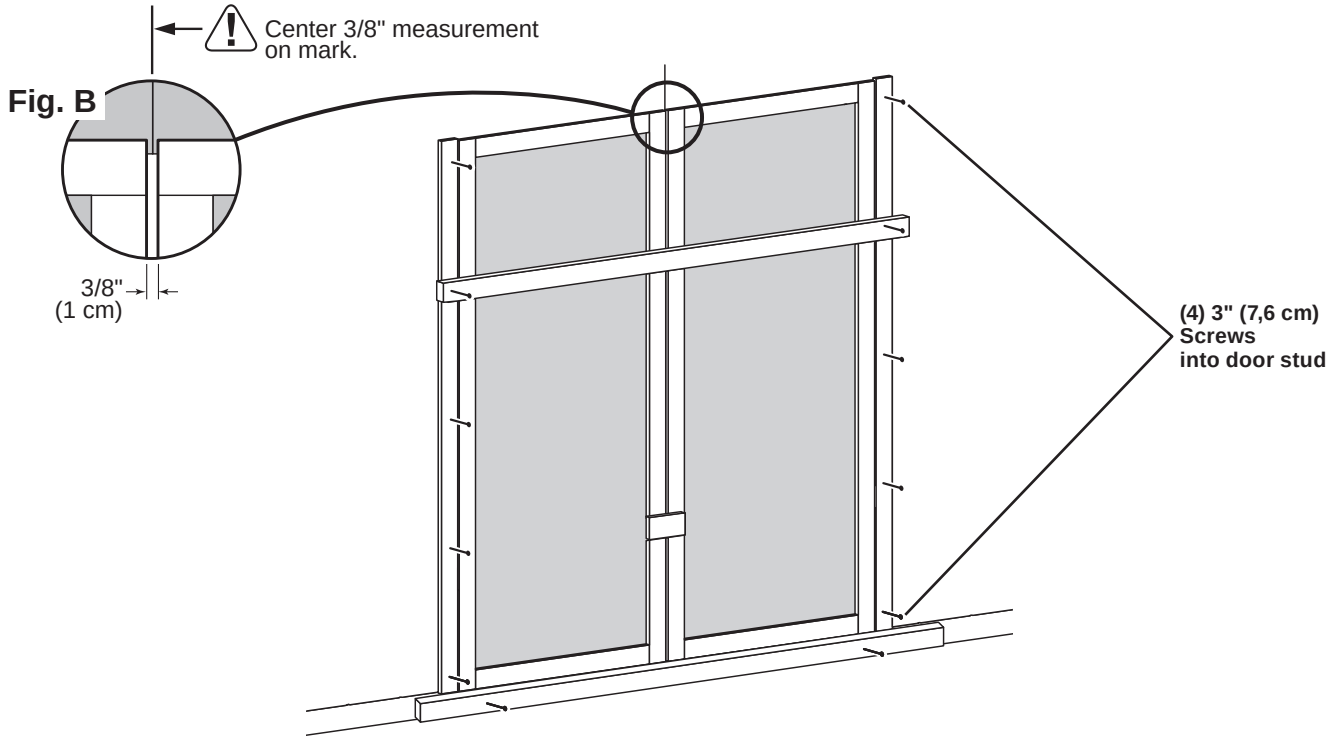

Remove temporary supports and check to make sure doors open and close properly.

FINISH
Your doors are now installed.

DOOR STIFFENERS

PARTS REQUIRED:

x10 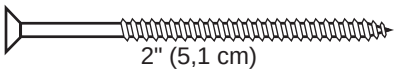

x2 **OO**
69” (175,3) Door Stiffener

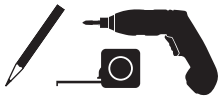

BEGIN

1 With left door closed, center **OO** vertically on the left door in the door opening **(Fig. A)**. **OO** will offset the left door 1" past the door trim **(Fig. B)**.

Secure **OO** with (5) 2" screws through outside trim into **OO (Fig. B)**.

2 On right door, center **OO** vertically in door opening **(Fig. A).** **OO** will offset the right door 1" in from the door trim **(Fig. C)**.

Secure **OO** with 2" screws through outside trim into **OO (Fig. C)**.

Fig. A

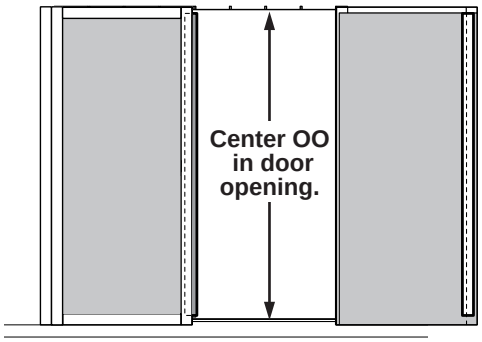

FINISH

Your door stiffeners are now installed.

DOORS

PARTS REQUIRED:

x1 AHR
19/32" x 2-1/2" x 62" (1,5 x 6,3 x 157,5 cm)

x1 AHL
19/32" x 2-1/2" x 62" (1,5 x 6,3 x 157,5 cm)

x2 AH
19/32" x 2-1/2" x 26 5/8" (1,5 x 6,3 x 67,6 cm)

x1 ZJ
19/32" x 2-1/2" x 72" (1,5 x 7,6 x 182,9 cm)



x7
2" (5,1 cm)

x22
3/4" (1,9 cm)

x40
1" (2,5 cm)

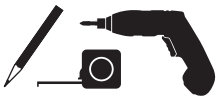

BEGIN

1 Reinforce the door trim using 1" screws through door panel into trim **(Fig. A).** Locate screws as shown in **Fig. B.** Use two screws at seams.

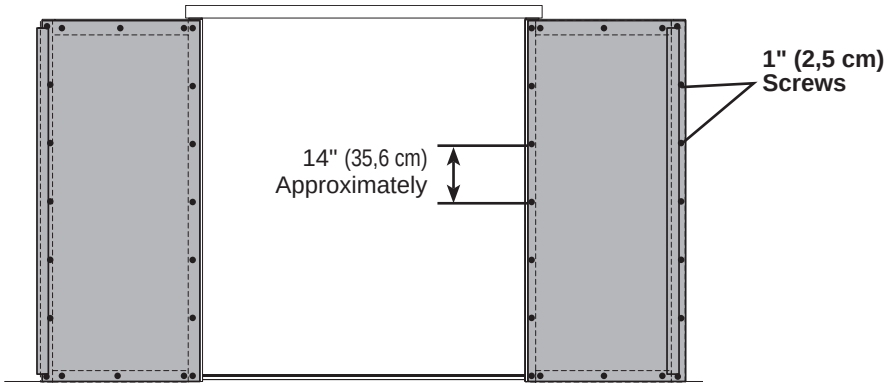

Fig. A

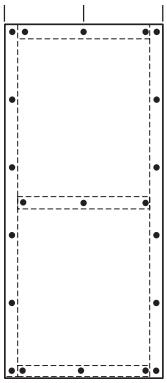

Fig. B

2 Center trim **ZJ** over doors and secure with(7) 2" finish nails into framing, as shown.

Remove 3/8" spacers from doors.

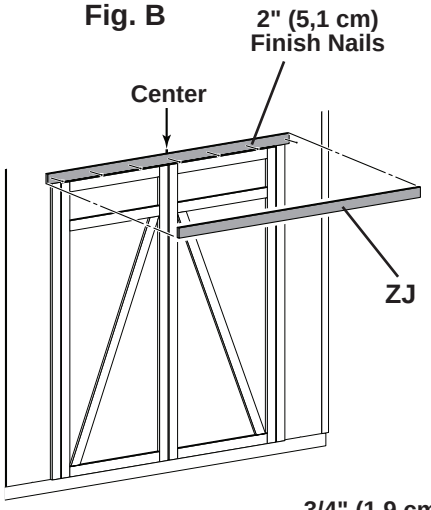

3 Level **AH** and **AHL/AHR** as shown and secure from inside with (11) 3/4" screws

FINISH

Your door trim is now installed.

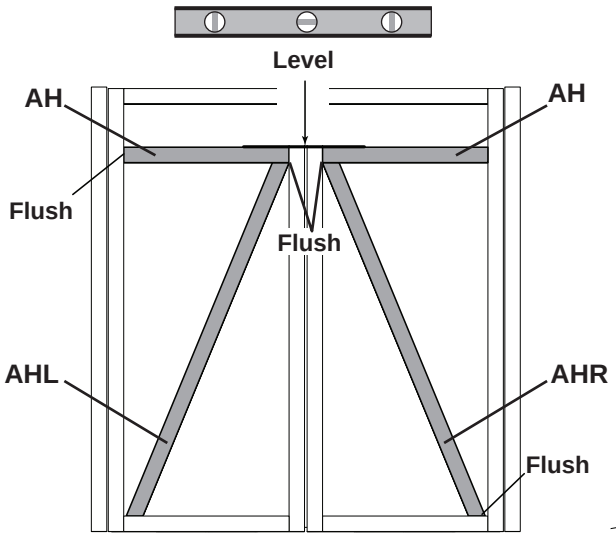

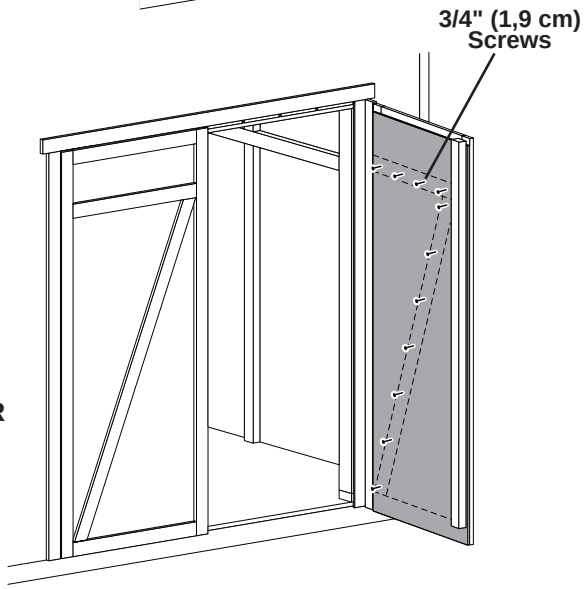

DOORS

PARTS REQUIRED:

x1

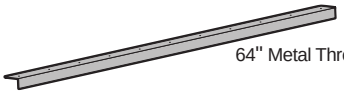

64" Metal Threshold

x11

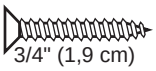

3/4" (1,9 cm)
Bagged separately/
special coating

x4



x12



3/4" (1,9 cm)

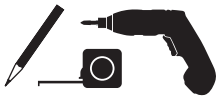

BEGIN

1 Center door threshold in door opening.

2 Secure threshold with (11) 3/4" screws.

(11) Special Coating Screws

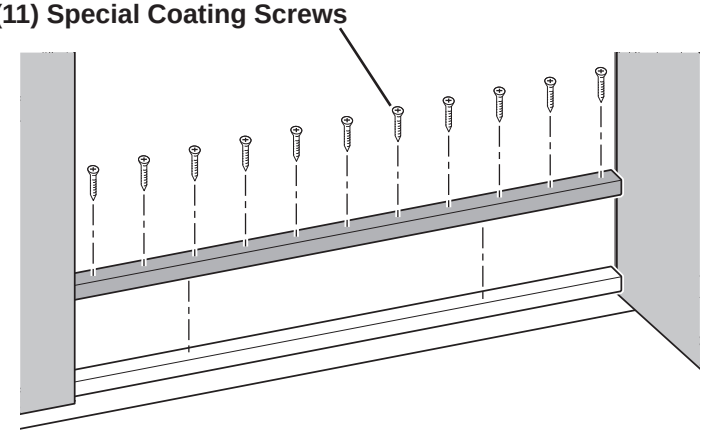

3 Install decorative hinges in locations shown and secure with 3/4" screws.

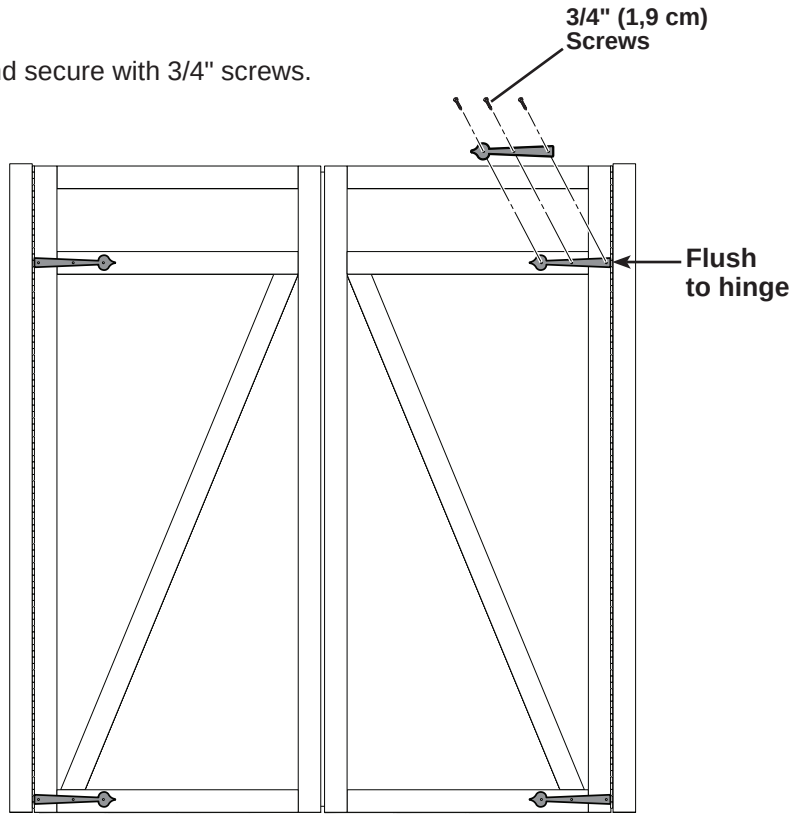

FINISH

Your threshold and decorative door hinges are now installed.

DOOR HARDWARE

PARTS REQUIRED:

x1 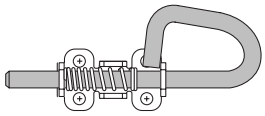

x4 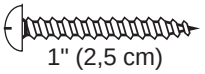
1" (2,5 cm)


5/16" (8 mm) Drill Bit

BEGIN

1 Place spring bolt on **OO** in the open position with bolt end 3/8" down from frame. Bolt is open when loop is contacting base **(Fig A)**.

Mark and pre-drill holes for screws.

2 Install bolt with screws supplied and drill 5/16" hole for bolt to extend into.

Fig. A

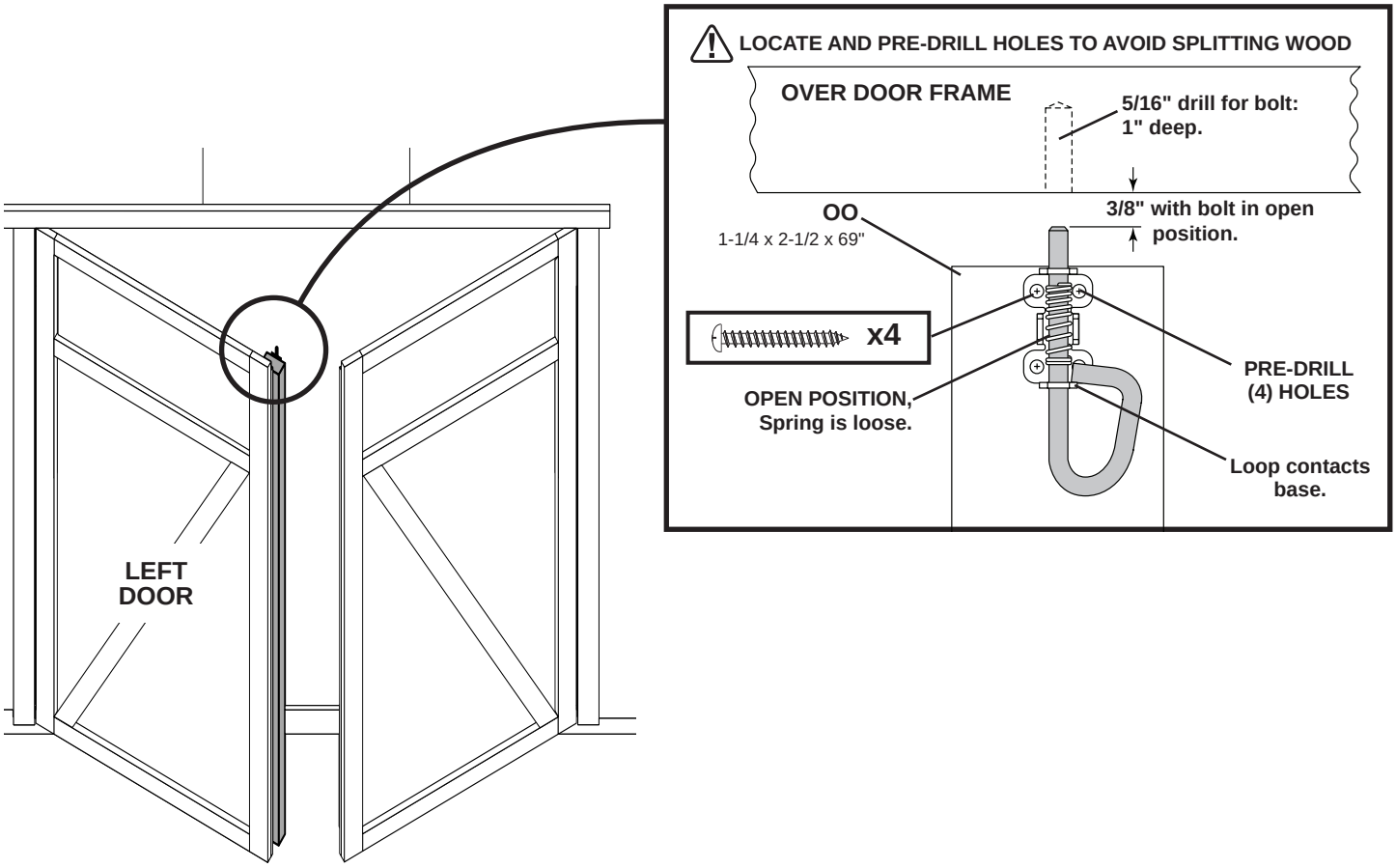

DOOR HARDWARE

PARTS REQUIRED:

x1 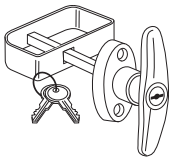

x2 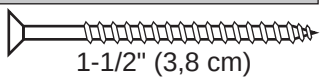
1-1/2" (3,8 cm)

3/8" (10,9 cm) Drill Bit

1/4" (0,6 cm) Drill Bit



3 Measure and mark location of hole on outside of right door **(Fig. A)**. Pre-drill hole with 1/4" drill.

Re-drill hole with 3/8 " drill.

⚠ Keep drilled hole square to trim to avoid breaking edge of door stiffener.

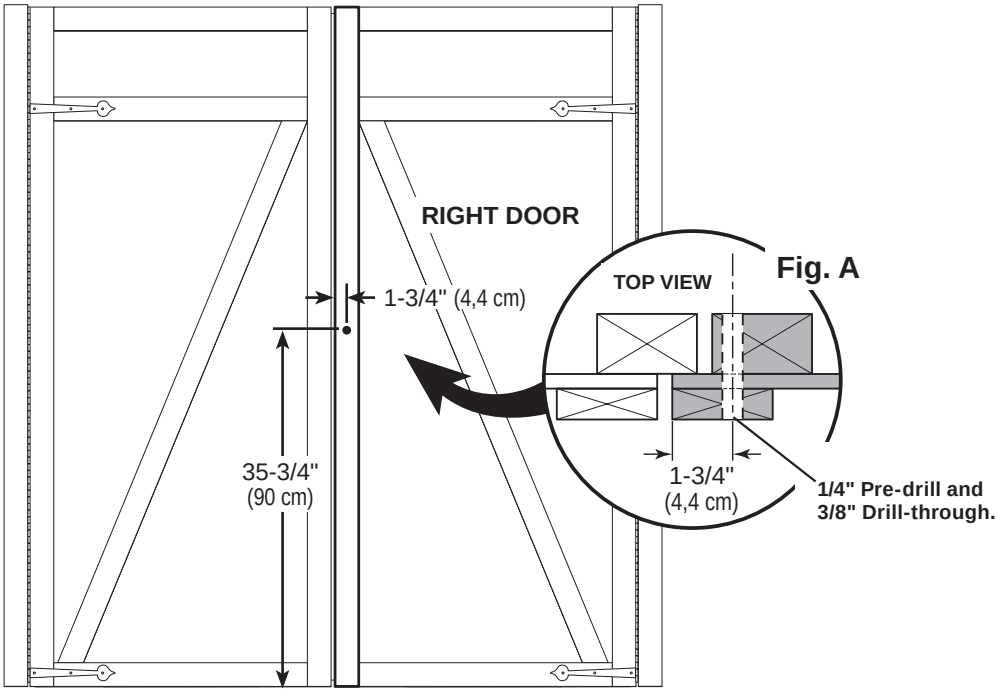

4 Insert handle in hole and secure with 1-1/4" screws.

Attach inside handle and secure with set screw as shown.

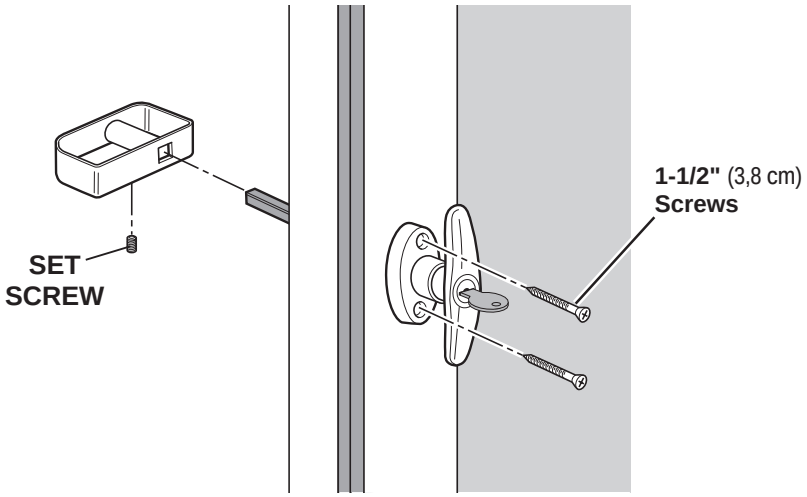

FINISH

Your spring bolt, T-handle and decorative hinges are now installed.

SHUTTERS

PARTS REQUIRED:

x4 DF
19/32 x 3 x 8-1/2" (5,1 x 7,6 x 21,6 cm)

x6 AZ
19/32 x 3 x 30-1/8" (5,1 x 7,6 x 76,5 cm)

x1 BWL
19/32 x 3 x 18-1/8" (1,5 x 7,6 x 53,3 cm)

x1 BWR
19/32 x 3 x 18-1/8" (1,5 x 7,6 x 53,3 cm)

x18
1" (2,5 cm)

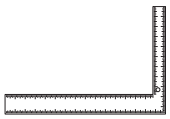

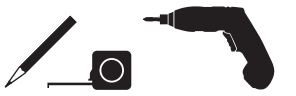

BEGIN

1 Arrange parts **DF, BWL and BWR** primed side-down on floor, as shown.

2 Secure **AZ** with 1" screws. Ensure 1/4" gap between **AZ**.

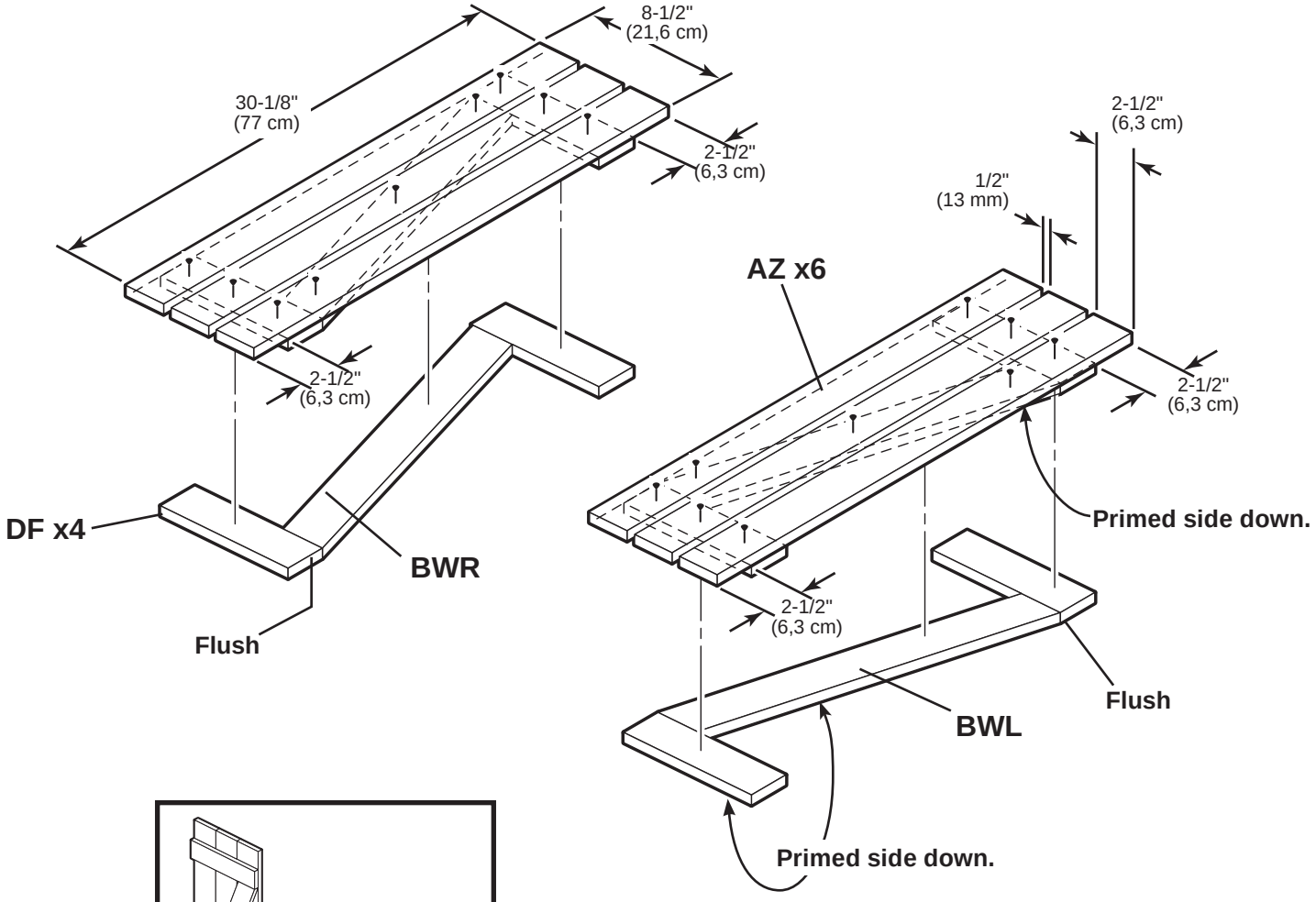

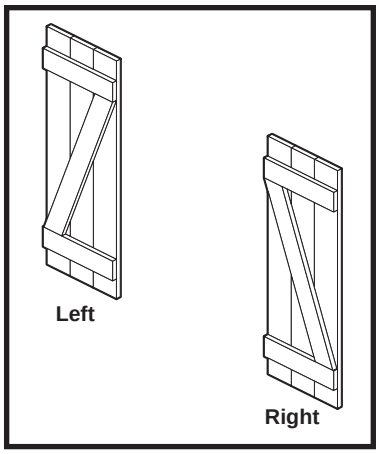

FINISH

Your window shutters are now assembled.

WINDOW TRIM & SHUTTERS

PARTS REQUIRED:

x2 **DT**
19/32 x 3 x 28-1/8" (1,5 x 7,6 x 71,4 cm)

x2
Pre-assembled shutter

x1

x6
3/4" (19 mm)

x4
1-5/8" (4,1 cm)

x16
2" (5,1 cm)

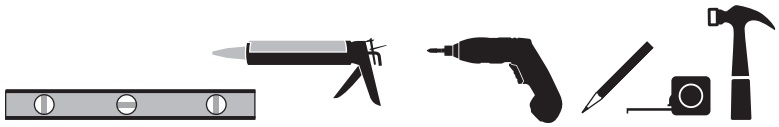

BEGIN

1 Place window in center of window cutout as shown.

Seal window by caulking behind frame with high-quality exterior-grade caulk before installing **(Fig. A)**.

Secure window with (4) 1-5/8" screws as shown. Ensure window is level.

You must caulk around windows to validate warranty.

Fig. A

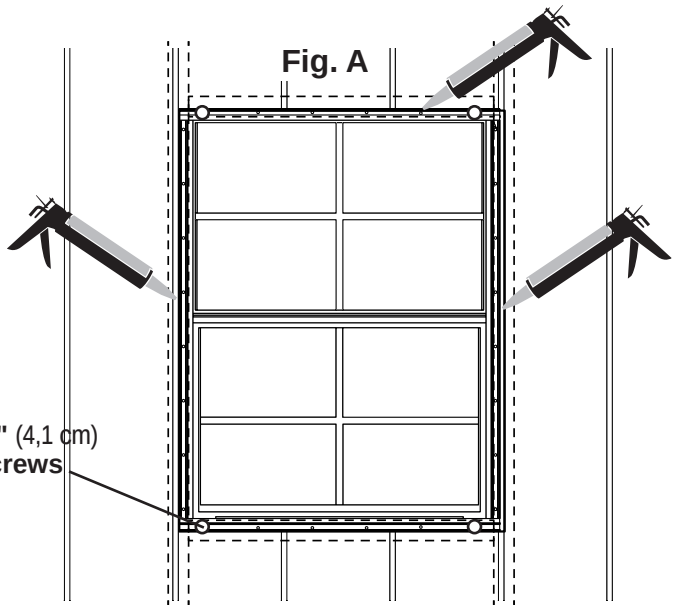

2 Place **DT** resting flat on window top flange.
Measure, mark and center **DT** with center of window.
Secure with 2" finish nails.
Nail into wall frame and studs behind.

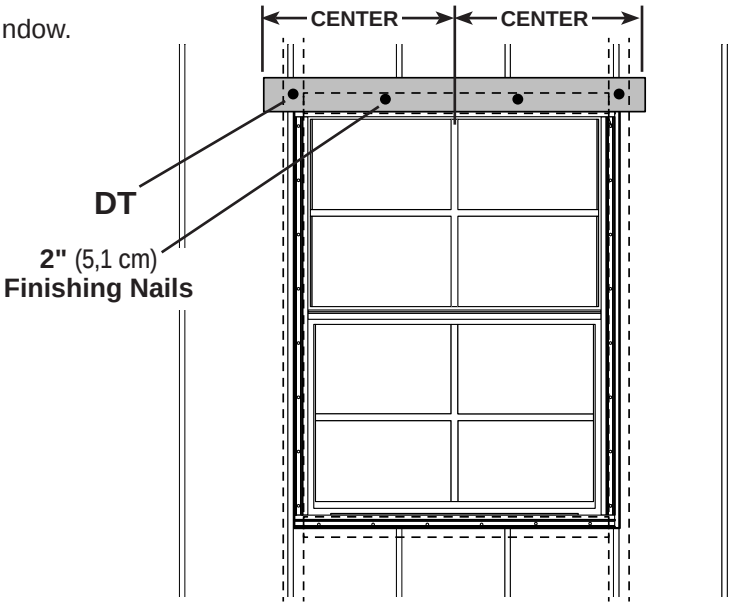

SHUTTERS

3 Line-up shutter slat flush with end corner of **DT** as shown **(Fig. B)**.
Use a level to ensure shutter is level.
Secure with 2" finishing nails at locations shown.
Nail into wall studs.
Don't nail into metal window frame.

Fig. B

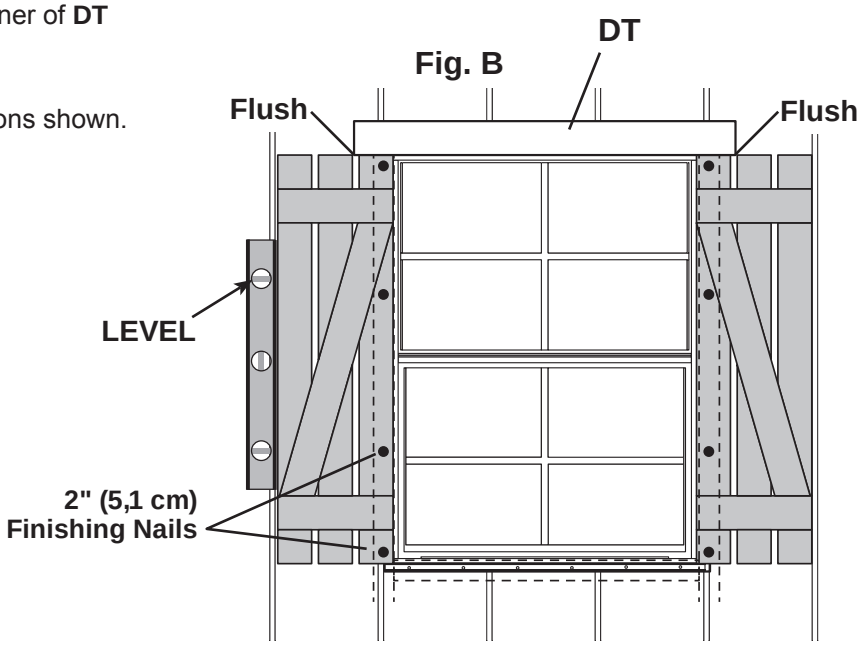

4 From inside of the shed, secure shutter at locations indicated with "**X**" using 3/4" screws.

Have a second person hold and press inward from outside shed while screws are installed.

Fig. C

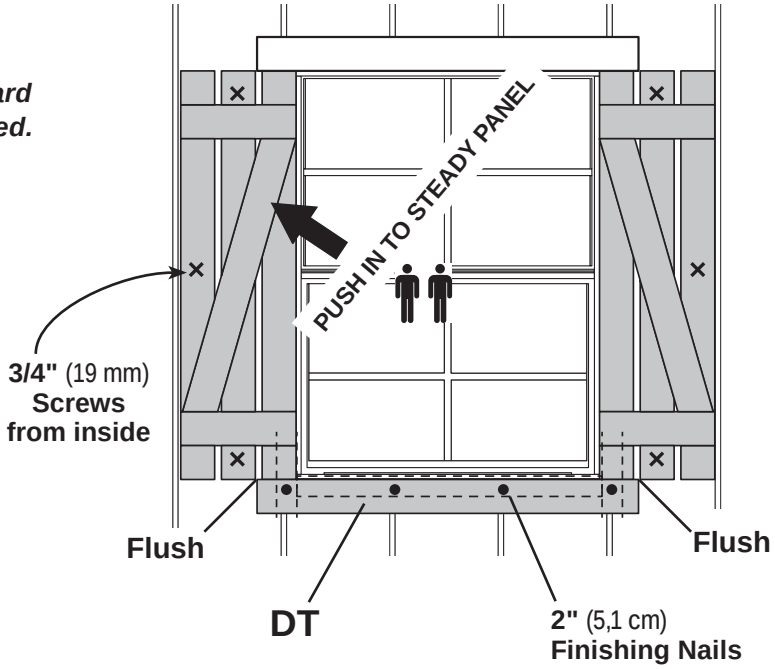

5 Install **DT** flush to bottom of shutters.
Align **DT** flush with shutter slats **(Fig. C)**.
Secure with 2" finish nails.
Nail into wall frame and studs behind.

FINISH

Your window and shutters are now installed.

WALL VENTS

• Follow directions provided by manufacturer and these instructions.

x2

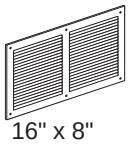

16" x 8"

NOTE:
Vents not included

x12

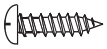

1/2” (13 mm)

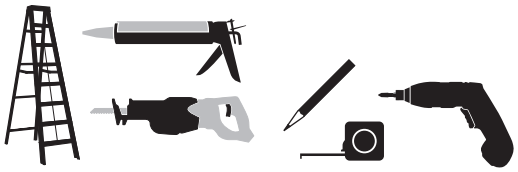

BEGIN

1 Locate and mark for two vents in side walls as shown; (1) at top and (1) at bottom.

Cut out marked openings.

Caulk behind vent flanges.

Secure with 1/2" screws.

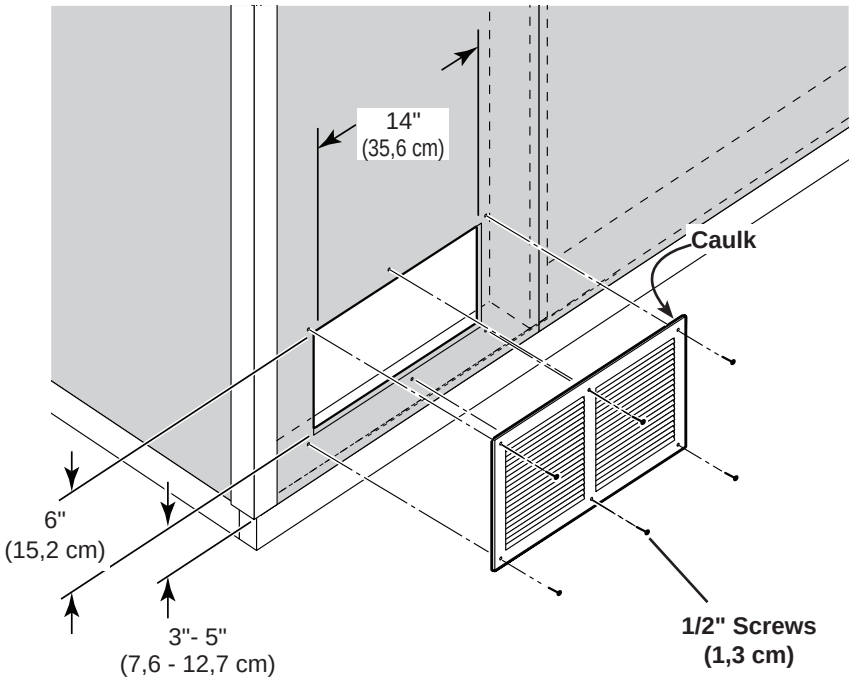

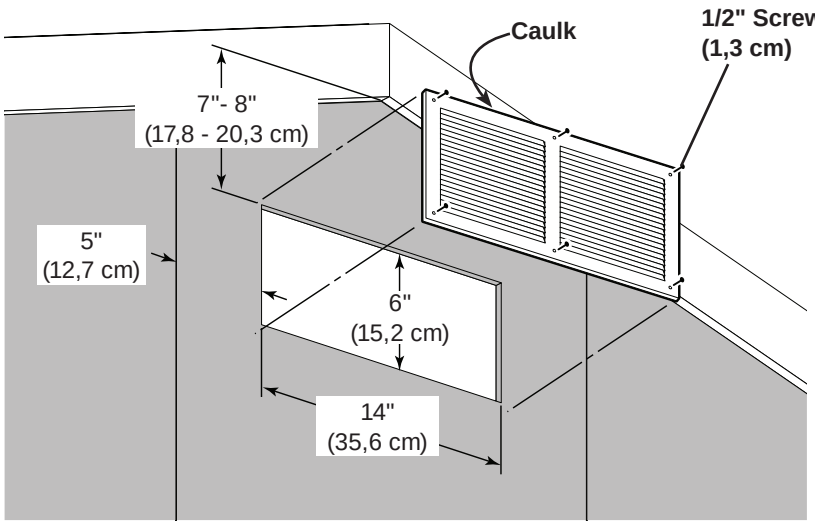

FINISH

Your vents are now installed.

PAINT & CAULK
- NOT INCLUDED -



• Use acrylic latex caulk that is paintable. Caulk at all horizontal and vertical seams, between the trim and walls, and all around the door trim.

• Use a high quality exterior acrylic latex paint. When painting your building, there are a few key areas that can be easily overlooked that must be painted:
  • Bottom edge of all siding and trim
  • Inside of doors and all 4 edges

Note:
Prime all un-primed exterior wood before painting.
(Follow directions provided by manufacturer.)

ROOF FELT
- NOT INCLUDED -

• Install felt flush to all roof edges overlapping 3". Use minimal amount of roofing nails to hold in place.

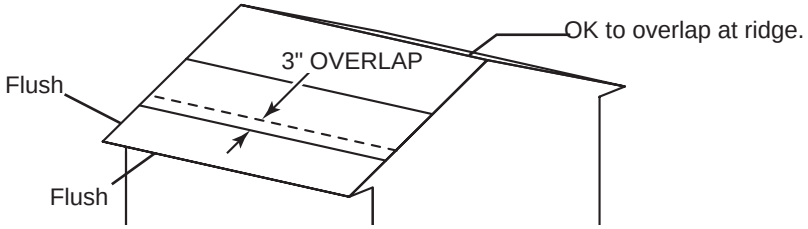

DRIP EDGE
- NOT INCLUDED -



• Install drip edge over roof felt on gable side and under roof felt on eave side (Fig. A).
• Do not use nails on side of drip edge that hangs over side of building.
• Only nail top of drip edge as shown.

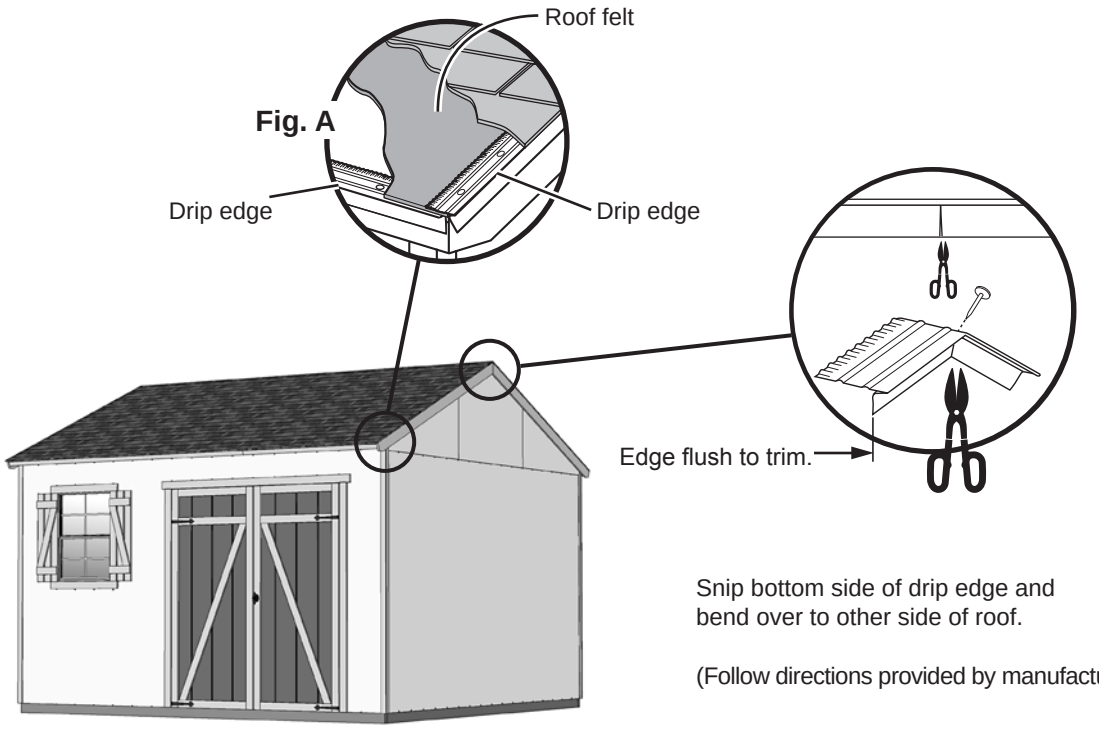

Snip bottom side of drip edge and bend over to other side of roof.

(Follow directions provided by manufacturer.)

SHINGLES
- NOT INCLUDED -

• Follow directions provided by manufacturer and these instructions.

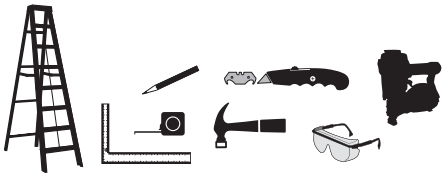

⚠ Familiarize yourself with a 3-Tab Shingle.

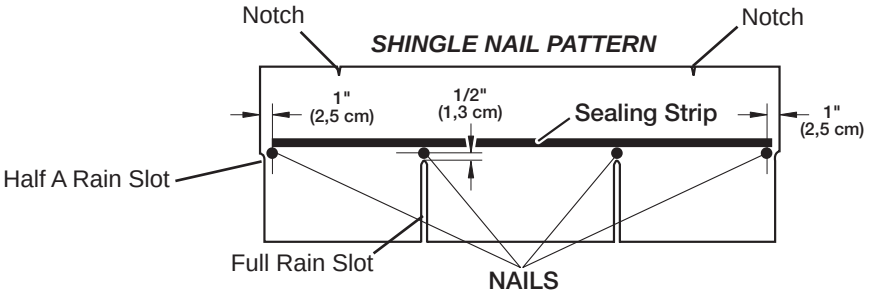

⚠ NEVER DRIVE FASTENERS INTO OR ABOVE SEALING STRIPS.

✓BEGIN

1 Install first starter row upside down and color up with a 1" overhang at back and bottom of roof panel. Use (4) nails per shingle. Starter row must be straight and level all the way across with lower edge of roof deck.
NOTE: If you have installed drip edge install shingles flush to drip edge.

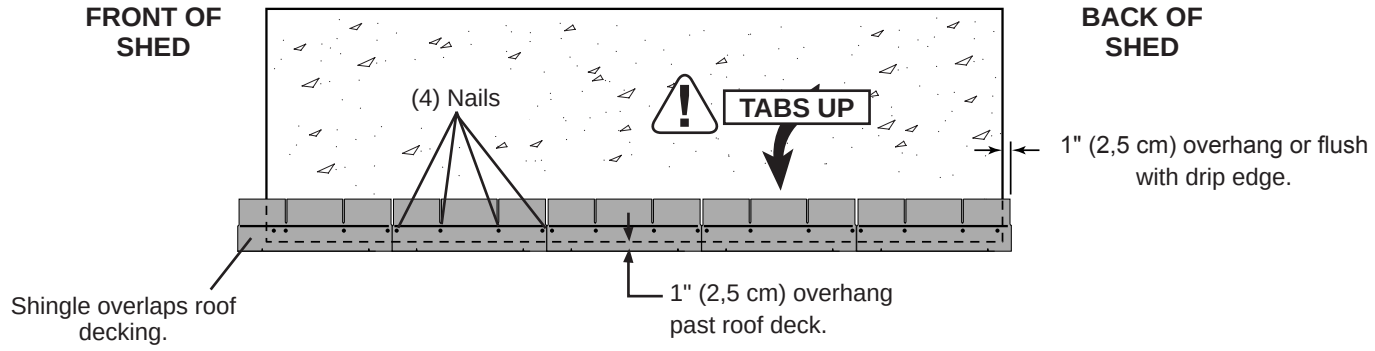

SHINGLES
continued...

2 Beginning at front of shed, install first row of shingles with notch at 1" past roof edge or flush with drip edge.

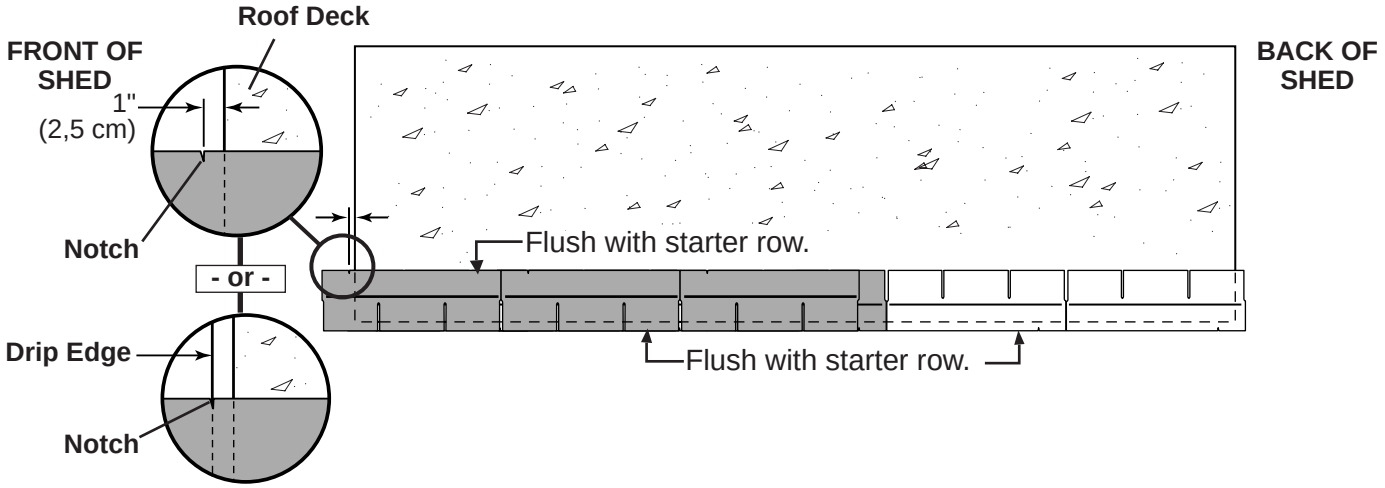

3 Install second row of shingles flush at top of first row's rain slots. Ensure 1" overhang or flush to drip edge at front, stagger each row.

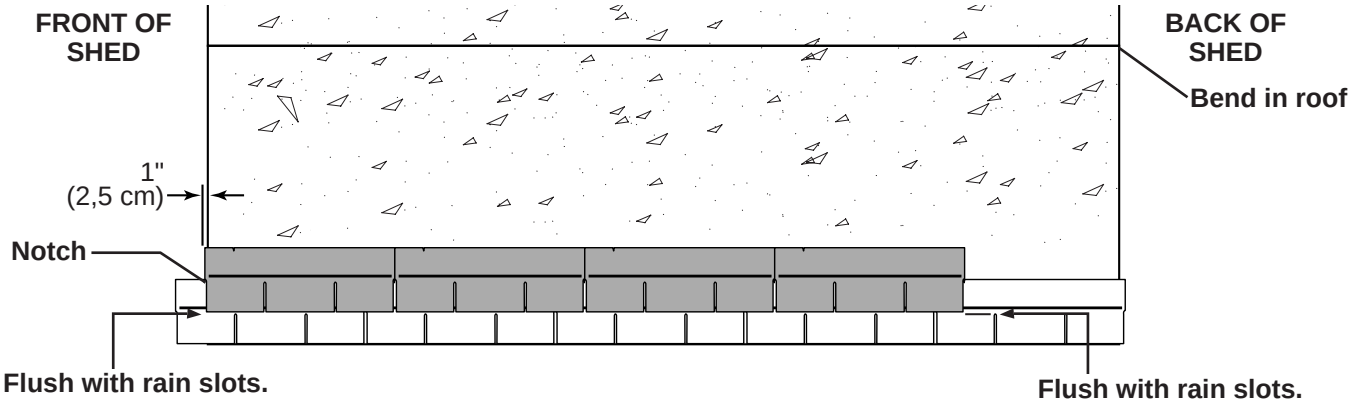

4 Continue installing rows of shingles by staggering at front.

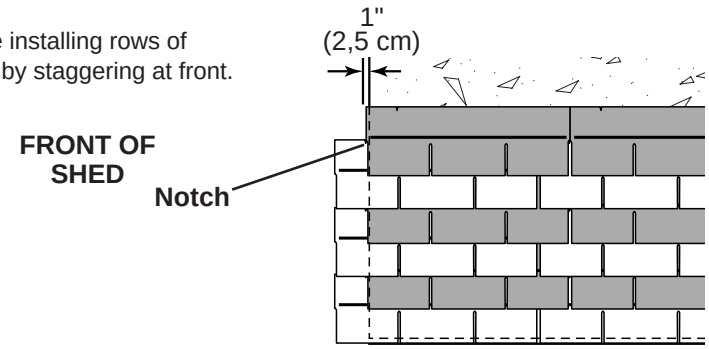

5 Continue installing rows of shingles to the peak. At the peak make sure there is a maximum of 5" or less to the rain slot, as shown below. If shingles overlap at ridge cut to peak with a utility knife.

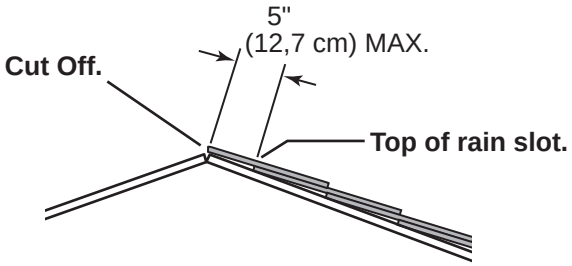

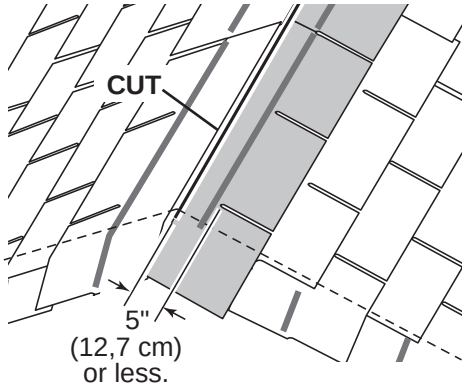

⚠ • If more than 5" to rain slot you must install another row of shingles.

6 Repeat steps 1 - 7 to shingle the opposite side of your roof. Trim shingles at ridge.

7 Once both sides are shingled you need to trim ends. Strike a chalk line 1" from edge.

8 Using your shingle hooked blade carefully cut shingles along chalk line.

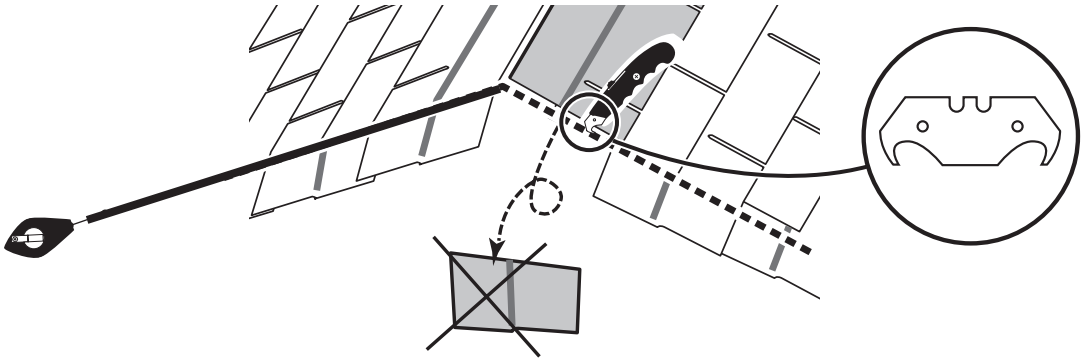

FINISH

9 You have finished shingling your roof. Proceed to capping the ridge.

SHINGLES - RIDGE CAP

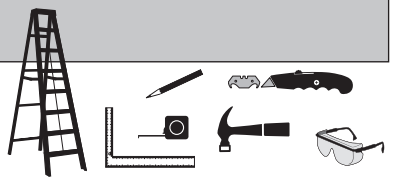

• You will finish off the top of the roof with a ridge cap made from shingles.

BEGIN

1 Cut shingles into THREE pieces. Hint: Use cut-off pieces first.

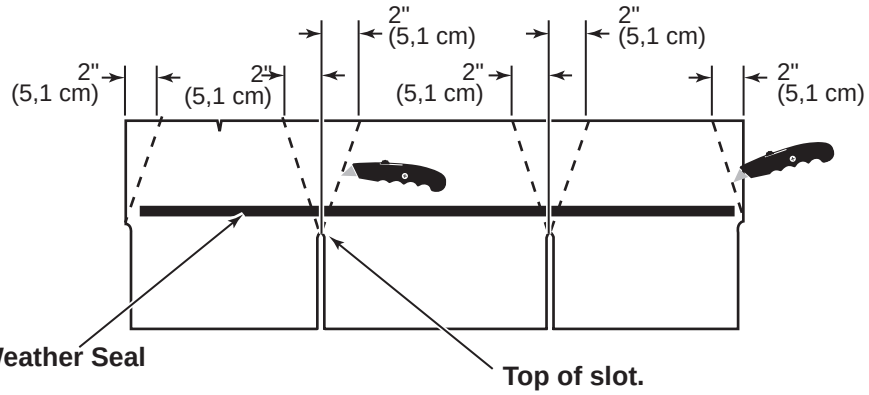

Score shingle, then snap-off angled cut.

30 to 32 Pieces

Note: •You will need about 38 - 40 cut pieces for 12' x 12' model

2 Install first ridge cap flush to shingles at front, as shown.

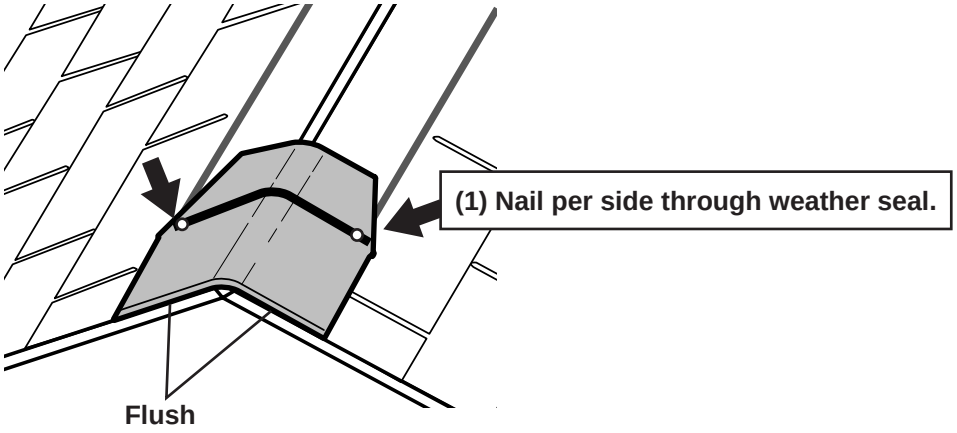

3 Install second ridge cap 5" back, as shown.

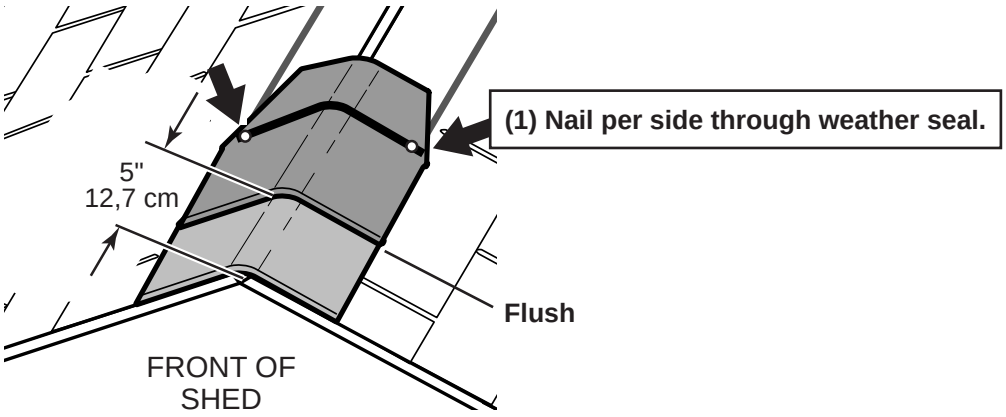

SHINGLES - RIDGE CAP
continued...

4 Continue installing ridge cap to back of roof.

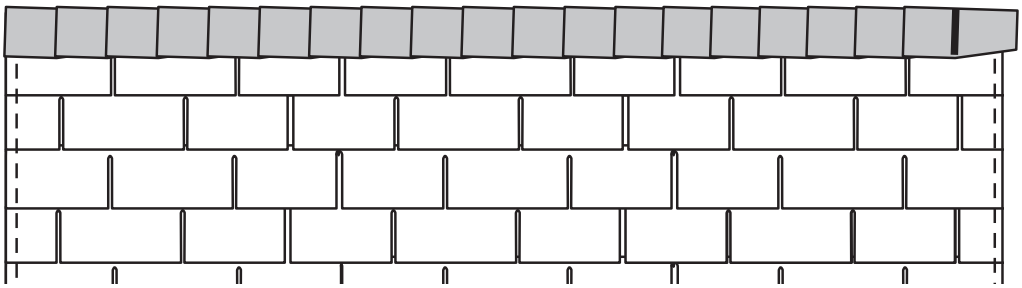

5 Make sure there is 4" between the shingle-color and edge of shingles.

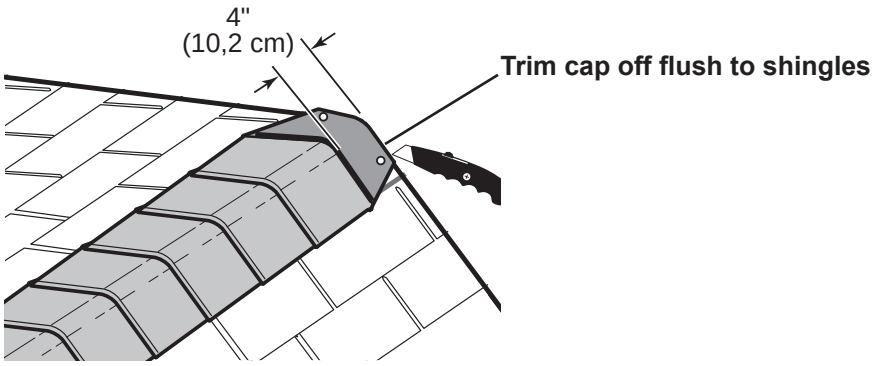

6 When you have 4" minimum of shingle color cut one piece to cap your roof.

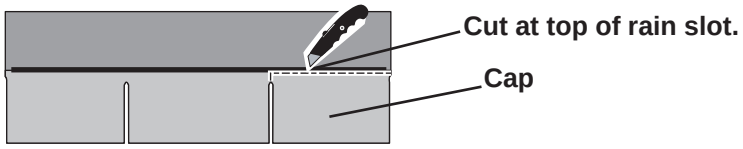

7 Install flush to shingles.

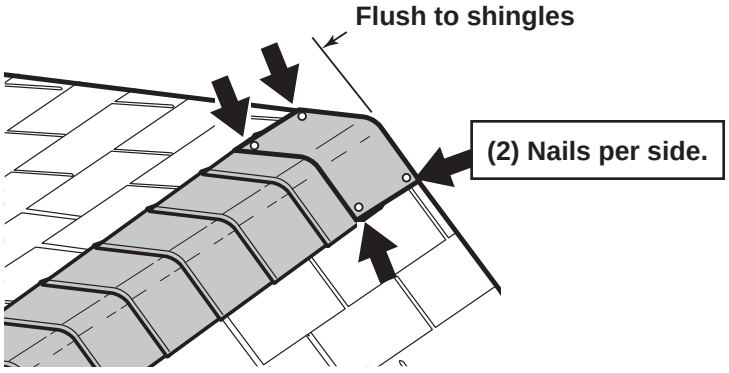

FINISH

8 You have finished your ridge cap.

16778-NG 12' x 12' Order Form

CATEGORY	PART DESCRIPTION	PART SIZE	PART ITEM #	BUILDING QTY.	PART ID
2 X 3	Loft Ledger Board "A"	LUM SPF 2X3X96 #2&BTR	12115	1	PT
	Loft Ledger Board "B"	2 X 3 X 48" PLATE	Q 48000000000	1	NK
	Bench Support	2 X 3 X 19" SUPPORT	Q 19000000000	7	LR
	Shelf Support	2 X 3 X 10" SUPPORT	Q 10000000000	7	AC
2 X 4	Back Wall Top & Btm "A" / Dblr "A" / Loft	LUM SPF 2X4X96 #2&BTR	12306	11	TP
	Side Wall T & B Plate "A" / Dblr "B"	LUM SPF 2X4X92-5/8 #2&BTR	12305	3	TJ
	Side Wall T & B Plate "B"	2 X 4 X 44 3/8" PLATE	O 44060000000	3	HVC
	Side Wall Top Plate	2 X 4 X 68-1/2"	O 68080000000	4	YFA
	Doubler "C"	2X4X48" DOUBLER/ PLATE/ CRATE	O 48000000000	10	SP
	Front Wall Bottom Plate "A"	2 X 4 X 60 1/2" PLATE	O 60080000000	1	AV
	Front Wall Bottom Plate "B"	2 X 4 X 12-1/2 " PLATE	O 12080000000	1	AJ
	Window Framing / Loft Support "A"	2 X 4 X 22 1/2"	O 22080000000	4	AO
	Window Bench Top Filler	2 X 4 X 11 5/8" FILLER	O 11100000000	1	BG
	Work Bench Stud	2 X 4 X 34" SHORT STUD	O 34000000000	1	SG
	Wall Studs	2 X 4 X 78 1/2"	O 78080000000	24	AI
	Jack Studs	2 X 4 X 68" STUD	O 68000000000	2	UM
	Over Door Crippler	2 X 4 X 7"	O 07000000000	5	AL
	Header	2 X 4 X 67"	O 67000000000	2	AM
	Rafter	2 X 4 X 77-15/16" @ 22.5	O 77152222000	14	ADA
	Loft Support "B"	2 X 4 X 19-3/4"	O 19120000000	1	PYA
	Front / Rear Gable Connector	2 X 4 X 18 1/8"-22.5* CONNECT	O 18022222000	4	AF
2 X 6	Overhang "A"	LUM WSPF 2X6X96 #1 PREMIUM PET	12416	2	VX
	Overhang "B"	2 X 6 X 49 1/2" OVERHANG	N 49080000000	2	AS
1 X 3 PINE	Gauge Block	1 X 3 X 5" PINE FILLER	U 05000000000	1	GAA
	Shelf Backwall Support "A"	LUM SPF 1X3X96 SQ EDGE PET	14403	2	BE
	Shelf Backwall Support "B"	1 X 3 X 48" PINE TRIM	U 48000000000	2	FO
1 X 4 PINE	Fascia "A"	LUM SPF 1X4X96 SQ EDGE PET	14407	2	KP
	Fascia "B"	1 X 4 X 48 PET	T 48000000000	1	WJ
	Bench Fascia "B"	1 X 4 X 44-1/2" PINE FASCIA	T 44080000000	1	HYA
7/16 OSB	Upper Roof Panel "A"	OSB 7/16" x 4' x 8'	11110	2	---
	Upper Roof Panel "B"	7/16" OSB 47 7/8" X 48" ROOF	C 48004714000	2	---
	Lower Roof Panel "A"	7/16" OSB 36-1/2" X 96" ROOF	C 96003608000	2	---
	Lower Roof Panel "B"	7/16" OSB 36 1/2" X 47-7/8"	C 47143608000	2	---
	Header Filler	7/16" OSB 3 1/4" X 66 3/4" HEADER	C 66120304000	1	---
	Loft Deck "A"	7/16" OSB 36" X 96" LOFT PANEL	C 96003600000	1	---
	Loft Deck "B"	7/16" OSB 36" X 40-7/8" PANEL	C 40143600000	1	---
	Bench Top "A"	7/16" OSB 19 1/2" X 92 1/2" BE	C 92081908000	1	---
	Bench Top "B"	7/16" OSB 19-1/2" X 48" PANEL	C 48001908000	1	---
	Shelf Top "A"	7/16" OSB 11 1/2" X 96" ROOF	C 96001108000	1	---
	Shelf Top "B"	7/16" OSB 11 1/2" X 48" ROOF	C 48001108000	1	---
1/4 PEGBOARD	Peg Board "A"	1/4" x 23-7/8" x 96"	A 96002314000	1	---
	Peg Board "B"	1/4" x 23-7/8" x 48"	A 48002314000	1	---
GUSSETS	Gusset	EZ8"/OSB 6" X 24" GUSSET 22.5*	J 24000600225	12	---
NO GROOVE SIDING	Center Gable Panel	3/8" NG 23 9/16"" X 33 1/2""	K 48003308044	2	---
	Front / Rear Gable Panel - Right	3/8" NG 23 9/16" X 48" RIGHT FRONT GABLE	K 48002309100	2	---
	Front / Rear Gable Panel - Left	3/8" NG 23 9/16" X 48" LEFT FRONT GABLE	K 48002309200	2	---
	Corner Trim	3/8" NG 1 3/4" X 83-1/2"	K 83080112000	8	---
	Rearwall Panel "A" / Side Panel	SIDING NGSE 3/8X4'X7'	11507	9	---
	12' wide Frontwall Panels w/ Window	NG 48" x 84" (GENTRY) WINDOW	K 84004800600	1	---
	Frontwall Panel Right	NG 48" x 84" RIGHT FRONTWALL	K 84004800101	1	---
	Frontwall Panel Left	NG 48" x 84" LEFT FRONTWALL	K 84004800201	1	---
	Bench Bracket	EZ 8" 14 1/4" X 22 1/4" BENCH	J 220414040PP	6	---
19/32 X 3 SMART TRIM	Vertical / Over Door Trim	19/32 TST 2 1/2" X 72" TRIM	UT72000208000	1	ZJ
	Long Cross Buck - Right	19/32 TST 2 1/2" X 62" 22.5*	UT62000208221	1	AHR
	Long Cross Buck - Left	19/32 TST 2 1/2" X 62" 22.5*	UT62000208222	1	AHL
	Horizontal Window Trim	19/32 TST 2 1/2" X 28 1/8"	UT28020208000	2	DT
	Vertical Trim Horizontal	19/32 TST 2 1/2" X 30 1/8"	UT30020208000	6	AZ
	Horizontal Shutter Connector	19/32 TST 2 1/2" X 8 1/2"	UT08080208000	4	DF
	Angled Shutter Trim - Right	19/32 TST 2 1/2" X 21"	UT21000208161	1	BWR
	Angled Shutter Trim - Left	19/32 TST 2 1/2" X 21"	UT21000208162	1	BWL
	Horizontal Door Rail	19/32 TST 2 1/2" X 26 5/8"	UT26100208000	2	AH
19/32 X 4 SMART TRIM	Gable Trim Right	19/32 TST 3 1/2" X 84 15/16" 22.5* O/E RGT TRIM	UT84150308221	2	CQR
	Gable Trim Left	19/32 TST 3 1/2" X 84 15/16" 22.5* O/E LFT TRIM	UT84150308222	2	CQL
PURCHASED COMPONENTS	Door Stiffener	LSL 1-1/4 X 2-1/4 X 69 PET	12715	2	OO
	Large Square Window	WINDOW 22 1/4" X 29 3/4" LG SQ	15281	1	---
	Black T-Handle	HANDLE - T 5-1/2" SHAFT & "D"	15375	1	---
	Faux Hinge (4pk)	HINGE (FAUX) w/ SCREWS (4 HING	15246	1	---
	Hardware Kit	H/K CLASSIC GENTRY PROD IMPROV	15878	1	---
	Threshold	THRESHOLD 7/8" X 1-1/2" X 63-7/8	15420	1	---
PACKAGING	Instructions		16778-NG	1	---
	30222-RNG				
Right Door Assembly	Door Panel	NG 31 1/4" X 71 3/8" DOOR	K 7106310400C	1	---
	Right Hinge Assembly	HINGE RIGHT (RED) 19/32x3 THIN TRIM	30121-TT	1	---
	Vertical Door Stiles	19/32 TST 2 1/2" X 71 5/8"	UT71100208000	2	GY
	Horizontal Door Rails	19/32 TST 2 1/2" X 26 5/8"	UT26100208000	2	AH
	30222-LNG				
Left Door Assembly	Door Panel	NG 31 1/4" X 71 3/8" DOOR	K 7106310400C	1	---
	Left Hinge Assembly	HINGE LEFT (GREEN) 19/32x3 THIN TRIM	30131-TT	1	---
	Vertical Door Stiles	19/32 TST 2 1/2" X 71 5/8"	UT71100208000	2	GY
	Horizontal Door Rails	19/32 TST 2 1/2" X 26 5/8"	UT26100208000	2	AH

LIMITED CONDITIONAL WARRANTY*

Backyard Storage Solutions, LLC warrants the following:

1. Every product is warranted from defects in workmanship and manufacturing for 1 year.
2. All accessories, hardware and metal components are warranted for 2 years.
3. All Oriented Strand Board (OSB) is warranted for 2 years
4. Siding and Trim is warranted for 10 years.
5. Solar Shed windows are warranted for 1 year.
6. Cedar lumber is warranted for 15 years.
7. Preserved Pine is warranted for 10 years.
8. Redwood is warranted for 10 years.

Backyard Storage Solutions, LLC will repair, replace or pay for the affected part. In no event shall Backyard Storage Solutions, LLC pay the cost of labor or installation or any other costs related thereto. All warranties are from date of purchase. If a cash refund is paid on an affected part, it will be prorated from the date of purchase.

CONDITIONS

The warranty is effective only when:

1. The unit has been erected in accordance with the assembly instructions.
2. The unit has been properly shingled and painted or stained and reasonably and regularly maintained thereafter.
3. The failure occurs when the unit is owned by the original purchaser.
4. Backyard Storage Solutions, LLC has received the warranty registration card within thirty (30) days of purchase and notification of the failure in writing within the warranty period specified above.
5. Backyard Storage Solutions, LLC has had reasonable opportunity during the sixty (60) days following receipt of notification to inspect and verify the failure prior to commencement of any repair work.

REQUIREMENTS

Storage Buildings

To validate your warranty, it is necessary to properly maintain your Backyard Storage Solutions, LLC unit; shingle the roof and paint or solid-colored stain the siding using quality, 100% acrylic latex exterior product with a minimum of two (2) coats within thirty (30) days of assembly; caulk above all doors and all horizontal and vertical trim boards; paint and seal all exposed edges, sides and faces of siding/trim and OSB siding to include all exterior walls and all sides and all edges of doors.

Gazebos & Pergolas

To validate your warranty, it is necessary to properly maintain your Backyard Storage Solutions, LLC unit. This includes treating all of the exposed cedar and pine surfaces on your gazebo or pergola structure with an exterior grade wood preservative, an exterior oil-based semi-transparent stain, an acrylic latex exterior paint or an acrylic latex solid color exterior stain within 30 days of assembly and as needed thereafter to maintain your warranty.

Keep vegetation trimmed away from building and make sure siding panels and trim do not come in contact with masonry or cement. The minimum ground clearance for siding must be one half inch (½ inch) from concrete slab or two and one half inches (2 ½") from the ground when building is erected or constructed on a treated wood floor kit. Water from sprinklers must be kept off unit. In no event will Backyard Storage Solutions, LLC be responsible for any indirect, incidental, consequential or special damages nor for failure(s) that are caused by events, acts or omissions beyond our control including, but not limited to, misuse or improper assembly, improper maintenance (which eventually leads to rot or decay) and acts of God. Backyard Storage Solutions, LLC will not be held responsible for any labor costs incurred to construct your unit.

This warranty gives you certain specific rights that vary from state to state.

CLAIM PROCEDURE

To make a claim under this warranty, you can either call 1-888-827-9056 or email: customerservice@backyardproducts.com.
Please have ready the information below when you call or include the information in your email:

1. The model and size of the product.
2. A list of the part(s) for which the claim is made.
3. Proof of purchase of the Backyard Storage Solutions, LLC item, as shown on the original invoice or receipt.
4. Run code: found on exterior product label or assembly instructions enclosed in the product package.

All other inquiries can be mailed to:

Backyard Storage Solutions, LLC
Attn: Customer Service
1000 Ternes
Monroe, MI 48162

***WARRANTY TERMS MAY VARY OUTSIDE THE U.S.A.**

IMPORTANT: This is your warranty certificate.