Volute® | K-29326-0

63" x 28-3/8" freestanding bath with base

Features

- Freestanding design creates a striking focal point in your bathing area
- Oval basin creates a spacious bathing experience
- Integral lumbar support on both ends
- Slotted overflow allows for deep soaking
- 12-1/16" (306 mm) deep-soaking depth provides a luxurious bathing experience
- Safeguard® slip-resistant surface provides excellent traction underfoot
- Center drain
- Preinstalled drain reduces installation time
- Color-matched pedestal base creates a sleek appearance
- Requires K-36361 Volute bath drain trim (sold separately)
- Low step-over height allows easy entry and exit



Sustainability

Available Colors/Finishes

Color tiles intended for reference only.

0 White

1-800-4KOHLER (1-800-456-4537)
Kohler Co. reserves the right to make revisions without notice to product specifications.
For the most current specification sheet, go to www.kohler.com USA or www.kohler.ca Canada.
8-06-2026 18:09 - US-CA

THE BOLD LOOK OF KOHLER

Codes/Standards

ASME A112.19.1/CSA B45.2

Technical Information

All product dimensions are nominal.

Drain Location:	Center
Drain Hole Diameter:	2-3/16" (56 mm)
Basin Area, Bottom:	50-1/4" x 20-3/8" (1277 mm x 518 mm)
Basin Area, Top:	60-1/4" x 23-11/16" (1531 mm x 602 mm)
Water Depth:	12-1/8" (308 mm)
Water Capacity:	42.45 gal (160.7 L)
Minimum Floor Load:	55.2 lbs/ft²
Weight:	305 lbs (138.3 kg)

Material

- KOHLER® enameled cast iron bath
- Painted exterior in White
- Reinforced resin pedestal base with White painted finish
- Brass drain

Required Products/Accessories

- K-36361 Bath drain trim

Warranty

See website for detailed warranty information.

KOHLER® Enameled Cast Iron Bath and Shower Base
Lifetime Limited Warranty

1-800-4KOHLER (1-800-456-4537)
Kohler Co. reserves the right to make revisions without notice to product specifications.
For the most current specification sheet, go to www.kohler.com USA or www.kohler.ca Canada.
8-06-2026 18:09 - US-CA

THE BOLD LOOK OF KOHLER®

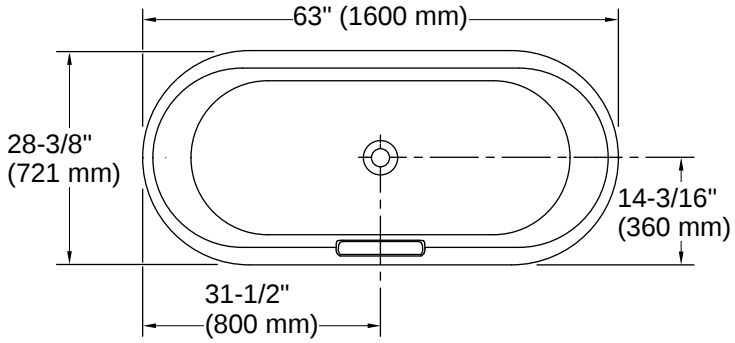

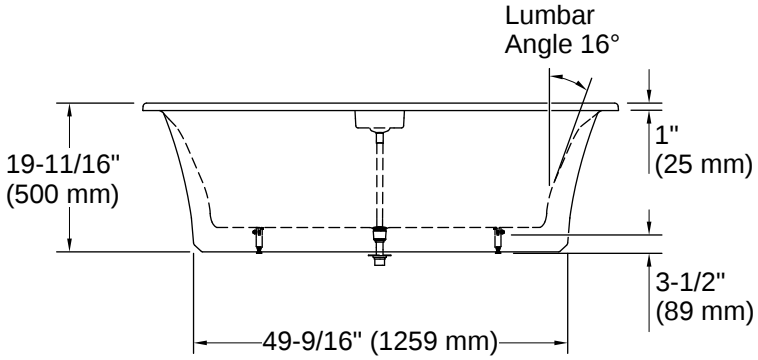

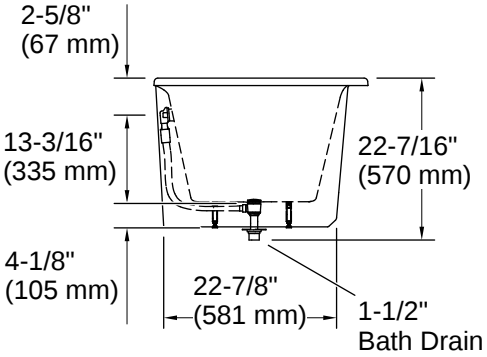

Installation

- Freestanding

Installation Notes

Install this product according to the installation instructions.

Measure your actual product for rough-in details.
The hot water supply should be 70% of the capacity of the bath or greater. Installations will vary.
Install this product according to the installation instructions.

1-800-4KOHLER (1-800-456-4537)
Kohler Co. reserves the right to make revisions without notice to product specifications.
For the most current specification sheet, go to www.kohler.com USA or www.kohler.ca Canada.
8-06-2026 18:09 - US-CA

THE BOLD LOOK OF KOHLER