PRODUCT SPECIFICATION

Model: QU-610-PK1

Series	Quartz QU Series
Material	80% quartz / 20% acrylic resin
Installation Type	Undermount
Configuration	Large / small bowl
Finish	Matte finish
Overall Dimensions	32" x 21 1/8" x 9 5/8"
Left Bowl Dimensions	15 1/4" x 18 1/2" x 8 7/8"
Right Bowl Dimensions	12 7/8" x 16" x 8 7/8"
Drain Size	3 1/2"
Colors Available	Bisque, Concrete, White, Black, Grey, Brown
Minimum cabinet size	36"
Template Included	Yes
Clips Included	Yes
Heat Safe	Up to 535°F
Resistant to	Stain, scratch, abrasion, impact
Drain Locations	Rear
Accessories Included	Strainer (x2), Bottom grid (x2) and Luster Pro oil

Shown in Black





ACCESSORY
Strainer - L-1 x2
Bottom Grid - GR-6010
Bottom Grid - GR-6011
Luster Pro oil

Stocked Color Options



BISQUE - BI

CONCRETE - CN

WHITE -WH

BLACK - BL

GREY - GR

BROWN - BR

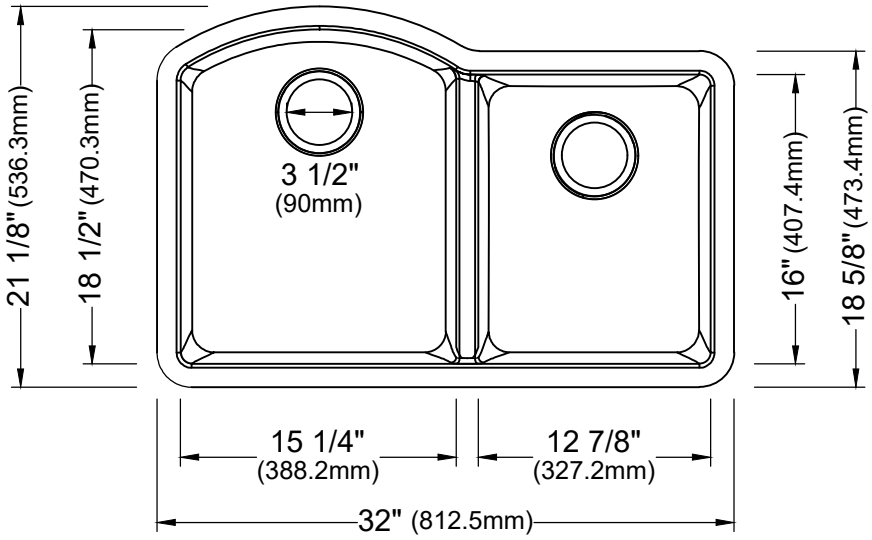

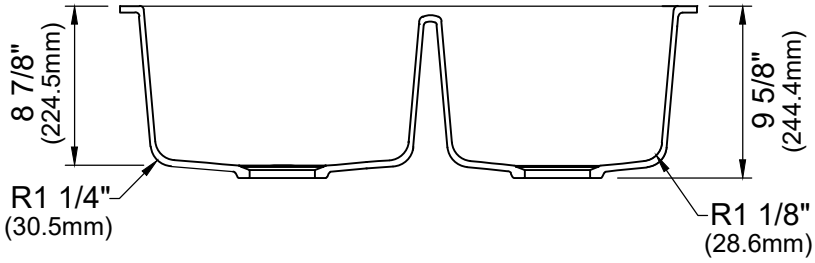

Listing and certifications:
cUPC

Limited lifetime warranty

We reserve the right to update product specifications without notice. Please visit karran.com for the most current specification sheets. All dimensions are accurate to 1/4". REV 06-2026