ASSEMBLY INSTRUCTION

SKU CODE: (N708P494076-N708P494077-N708P494078)

INSTRUCTIONS DE MONTAGE

SKU NUMBER: (N708P494076-N708P494077-N708P494078)

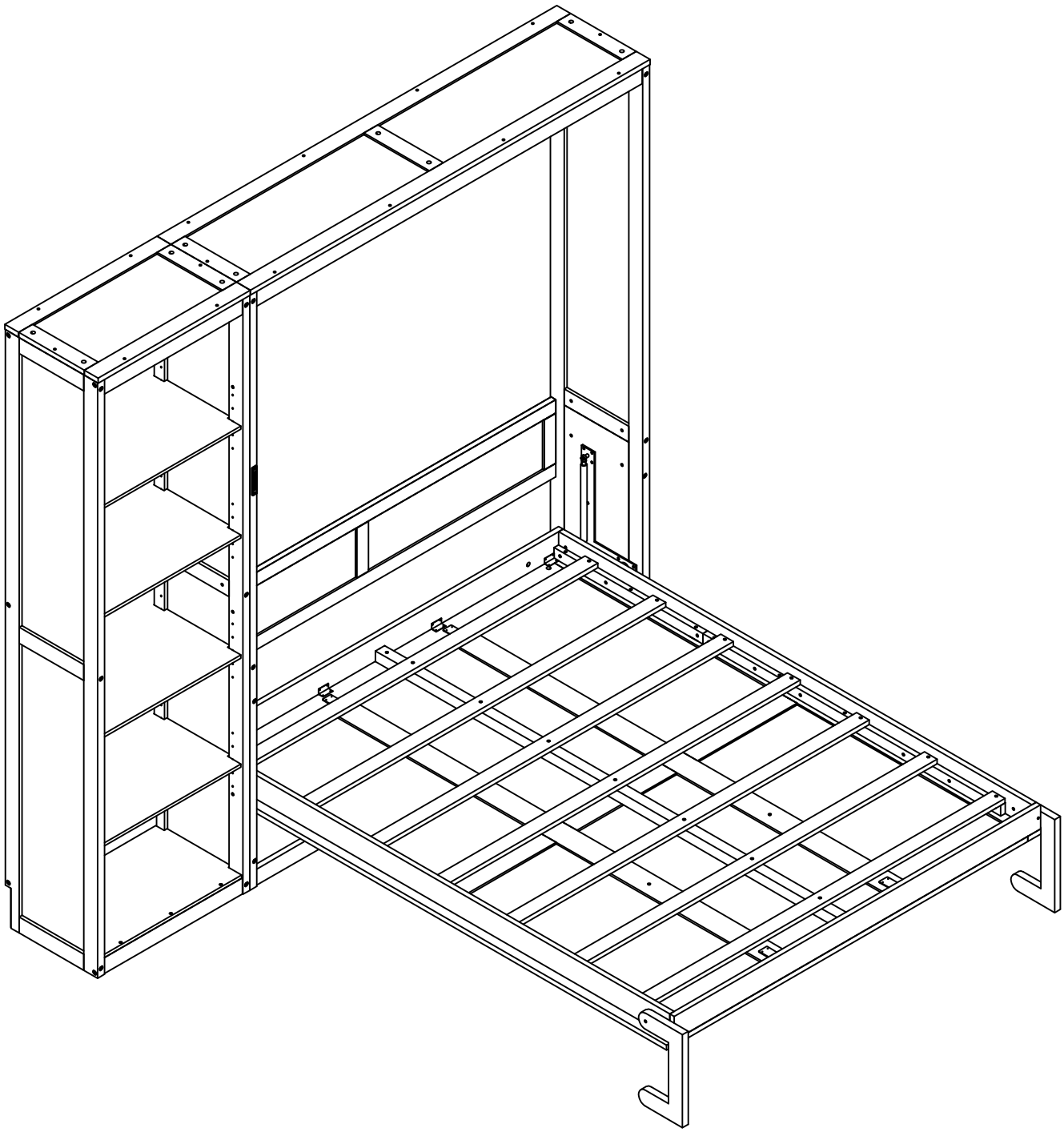

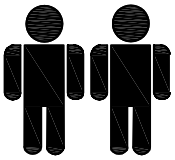

Two people are required to assemble and move this model.
Deux personnes sont nécessaires pour assembler et déplacer ce modèle.

Note: This bed must be equipped with a mattress e quivalent to 44 lb

Remarque : Ce lit doit être équipé d'un matelas équivalent à 44 livres

⚠ SAFETY FIRST: WALL ANCHORING IS NON-NEGOTIABLE

MURPHY BEDS MUST BE SECURELY ANCHORED TO STRUCTURAL MEMBERS. NEVER MOUNT SOLELY TO DRYWALL. IMPROPER INSTALLATION CAN CAUSE SERIOUS INJURY OR DEATH.

⊘ ABSOLUTELY FORBIDDEN HARDWARE

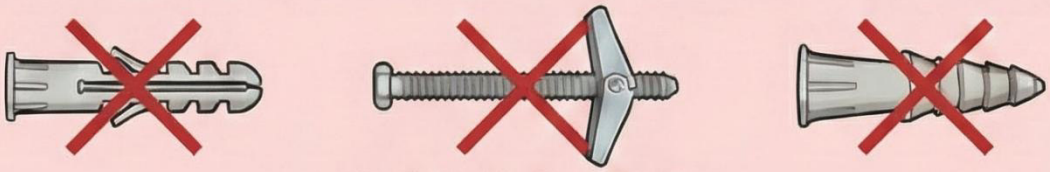

PLASTIC ANCHORS - WILL FAIL

A. WOOD STUD WALL

HOW TO IDENTIFY

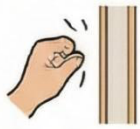

KNOCK ON A HOLLOW WALL

STUD FINDER TOOL

STUDS SPACED IS 16" STUD

REQUIRED HARDWARE

HEAVY-DUTY SCREWS (MIN. 5/32" DIA., 2.5" LONG)

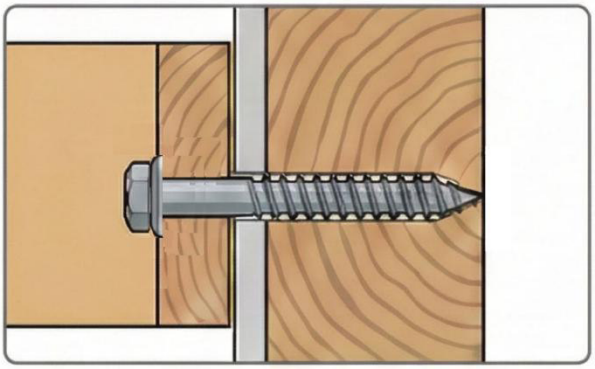

MUST PENETRATE WOOD STUD CENTER AT LEAST 2.5"

B. MASONRY/CONCRETE WALL

HOW TO IDENTIFY

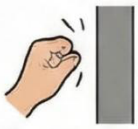

KNOCK ON A SOLID WALL

DRILL BIT CREATES GREY/RED DUST

REQUIRED HARDWARE

ALL-METAL EXPANSION BOLTS (MIN. 5/32" DIA., 2.5" LONG)

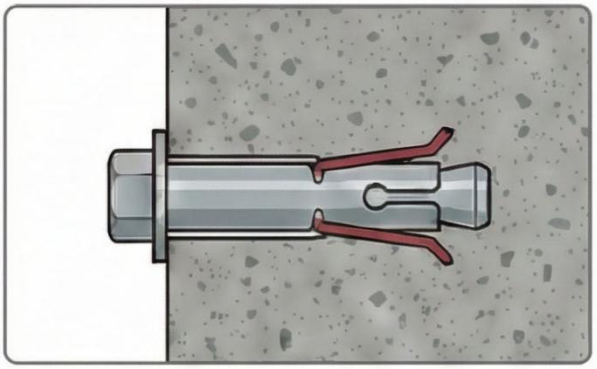

CLEAN HOLE OF DUST. DO NOT USE PLASTIC.

☑ FINAL SAFETY CHECKLIST

- ☑ VERIFY STUD CENTER BEFORE DRILLING
- ☑ ENSURE FLUSH WALL FIT (ADJUST BASEBOARD)
- ☑ PERFORM PULL TEST BEFORE MATTRESS LOAD
- ☑ AVOID HIDDEN WIRES/PIPES BEFORE DRILLING
- ☑ REGULARLY INSPECT AND MAINTAIN WALL ANCHORS
- ☑ CONSULT A PROFESSIONAL FOR WALL ASSESSMENT AND OPTIMAL HARDWARE; CUSTOMER ASSUMES ALL INSTALLATION LIABILITY

IMPORTANT INFORMATION PACKAGE.

THIS INFORMATION PACKAGE CONTAINS WARNING AND PRODUCT SAFETY INFORMATION. DO NOT PROCEED WITHOUT REVIEWING THOROUGHLY.

A.) WARNING LABELS.

The Murphy Bed you purchased is delivered to you with WARNING LABELS to constantly remind you to adopt Safety Measures throughout the entire assembly and mounting points of the Bed to the walls.

DO NOT REMOVE these labels.

These Warning Labels serve as a Reminder Tool for visiting friends and relatives when using the Murphy Bed to ensure Safety Precautions are taken.

WARNING.

IMPORTANT SAFETY REQUIREMENTS - Bed Attachment to Wall.
For Your Safety, the Murphy Bed MUST BE ATTACHED to the Wall.

Seek Certified Professional Consultant / Contractors for their Services to:
1.) DETERMINE the WALL Type in Your Home;
2.) PRECISE HARDWARE that suits to the Wall Type in Your Home;
3.) INSTALL / ATTACH of the Murphy Bed to the Wall in Your Home;
4.) VALIDATE the Murphy Bed is appropriately and securely installed/attached.

The choice of wall anchoring hardware depends on the type of wall. This Murphy Bed is delivered with HARDWARE SCREWS suited for attachment to WOOD STUDS in walls and hardware fittings suitable for fixing on CONCRETE SOLID walls. Please select the correct wall-fixing hardware. Any STUDS type detected with your Consultant-Contractors to be NOT WOOD STUDS or CONCRETE SOLID WALLS - DISCARD and DO NOT USE these SCREWS. Use the hardware suitable for your wall material.

Seek the professional advice of your Consultant-Contractor and procure the appropriate hardware and brackets for the attchment of the Murphy Bed to the Wall.

FAILURE TO ADHERE TO THE ABOVE INSTRUCTIONS MAY RESULT IN SERIOUS and/or SEVERE INJURIES or Death caused by the detachment of the Murphy Bed from the Wall.

SAFETY PRECAUTION :
1.) **MAXIMUM Mattress Weight** suited to your Murphy Bed : **__lbs (___kg);**
   MAXIMUM mattress thickness: __ inches (__ cm);
2.) **ENSURE ADULTS ONLY** throughout the entire assembly and attachment.
3.) **KEEP ALL Children, Non-Ambulatory persons and Pets** at bay during the entire assembly and attachment.

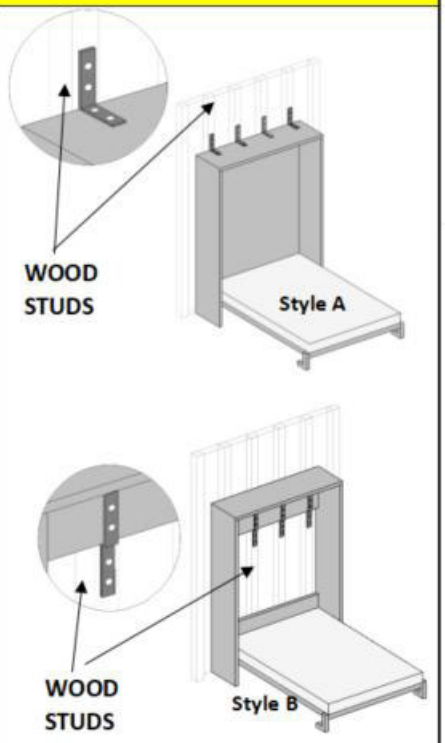

WOOD STUDS walls - Locking wall illustration

LINE ART for Reference only and
NOT DRAWN TO SCALE.

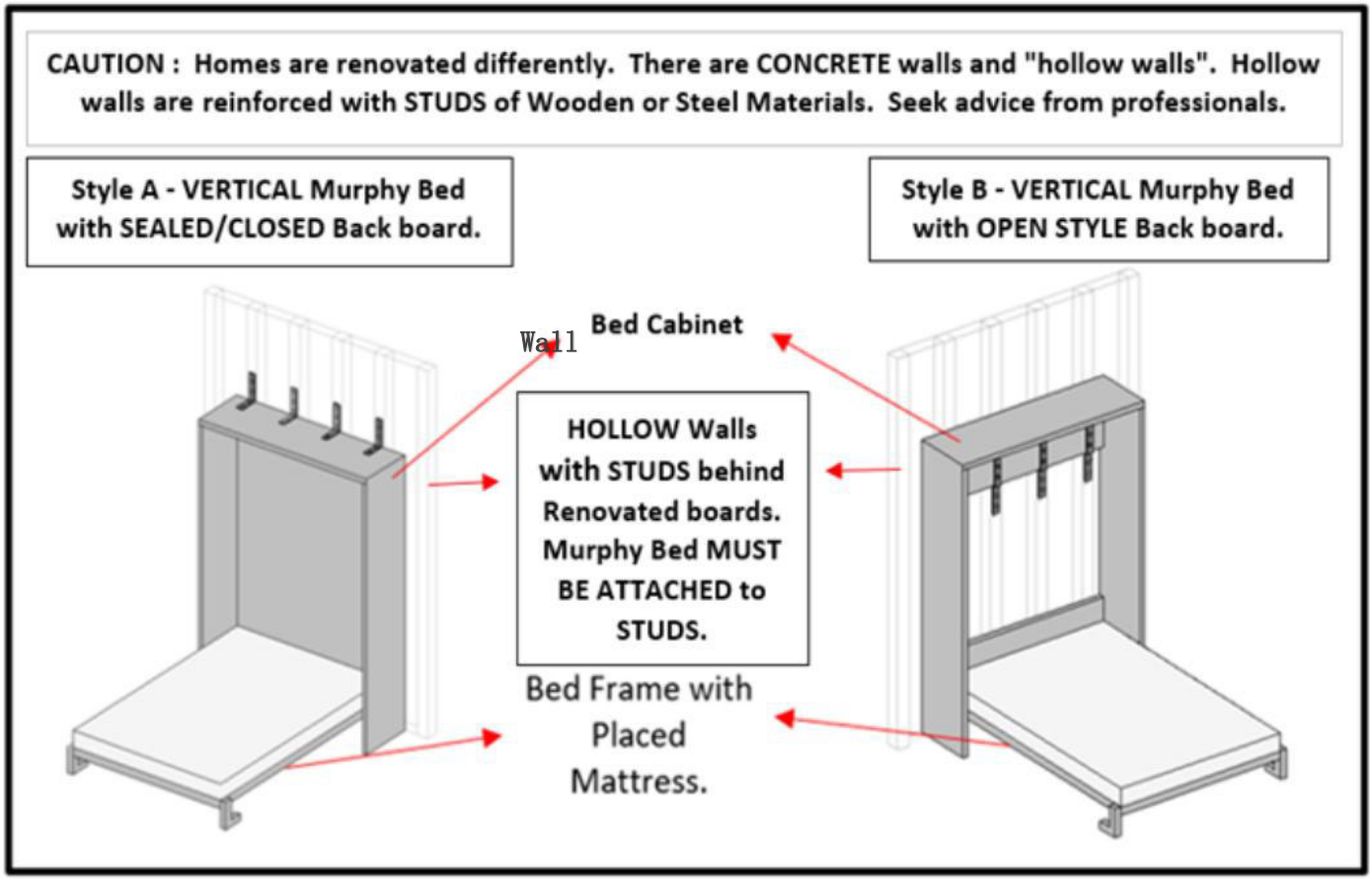

B.) SAFETY REMINDERS.

MARKINGS in WALL – WHERE TO ATTACH the MURPHY BED.

Irrespective of the wall type, whether **Solid Concrete Walls** OR **Decorative Walls with WOODEN Studs** OR **Decorative Walls with Metal Studs**, ensure that

a. **) you choose a professional installer who has a good understanding of the wall structure where the Murphy Bed is anchored, including the position of the wall studs and structural components in the case of a wood or metal structure.**
b. **) precise markings of the positions of the anchor points are to be made on the wall for easy identification during the Murphy Bed attachment to the wall.**
c. **) the relevant and appropriate Hardware with Metal Brackets is READY for this attachment and easily accessible for prompt and efficient attachment.**

This product requires Professional Consultation and Installation*.

* When you choose the professional installer, make sure to comply with all applicable laws, regulations and rules in the city, state or country where the Murphy Bed is installed.

To have your Murphy Bed fully assembled and to achieve its intended functionality – you **MUST READ** through this entire Assembly Instructions Manual before you start the assembly of the bed

1.) **There are numerous Safety Issues and Safety Precautionary Actions that you MUST KNOW before you start the Assembly.**

2.) **CAUTION - Failure to FOLLOW / ADHERE to the GUIDE, WARNING AND REMINDERS here, may result in serious / severe injuries or death.**

3.) **PRECAUTION : For the assembly, Adult Partners only, to assist in the entire assembly. Ensure NO LESS THAN 2 ABLE BODIED PERSONS ONLY in the entire assembly and attachment of this Murphy Bed to the walls of your home.**

4.) **CAUTION : During the entire assembly process and attachment of the Murphy Bed to the walls of your home, Keep ALL Children, Non-Ambulatory Persons and Pets completely away.**

5.) SAFETY REMINDER on / to : Personal, Family Members and Pets. The Murphy Bed may be shipped to you in 3 to 5 packages and are HEAVY. Each carton holds many parts and components. Some of these components eg., bolts and screws are relatively small* in size.

***. During the assembly process, ensure that any misplaced bolts and nuts are picked up so that Children and / or Pets do not play or ingest these.**

6.) This Murphy Bed is intended for ADULT USE ONLY.

7.) This Murphy bed is delivered with pre-installed hardware for the wood studs and the concrete solid wall - please choose the appropriate hardware according to the type of the wall.

8.) **Your Home's Wall Type -** Every home is renovated differently with different wall(s) type / finishes. Before you proceed to assemble your Murphy Bed :

a.) **SEEK and CONSULT Professional Services** to ascertain the wall type in the designated location where you intend to attach the Murphy Bed;
b. **) ENSURE** the Consultant-Contractor specifically **INFORMS** you of the **WALL TYPE** in the designated spot where you intend to attach the Murphy Bed.
c.) **ENSURE** the Consultant **INFORMS** you specifically on the matching and relevant Hardware / Brackets to secure and attach the Murphy Bed to the wall.

9.) **WARNING** – **YOU MUST HEED THE INSTRUCTIONS** given by your appointed Consultant-Contractor on the :

a.) Mounting Hardware Type that suits the wall(s) type - where / when it is NOT WOOD STUDS or NOT CONCRETE SOLID WALL, the **pre-packed hardware not match/ not fit.**
b.) Number of Mounting Points for the Murphy Bed to the Wall.

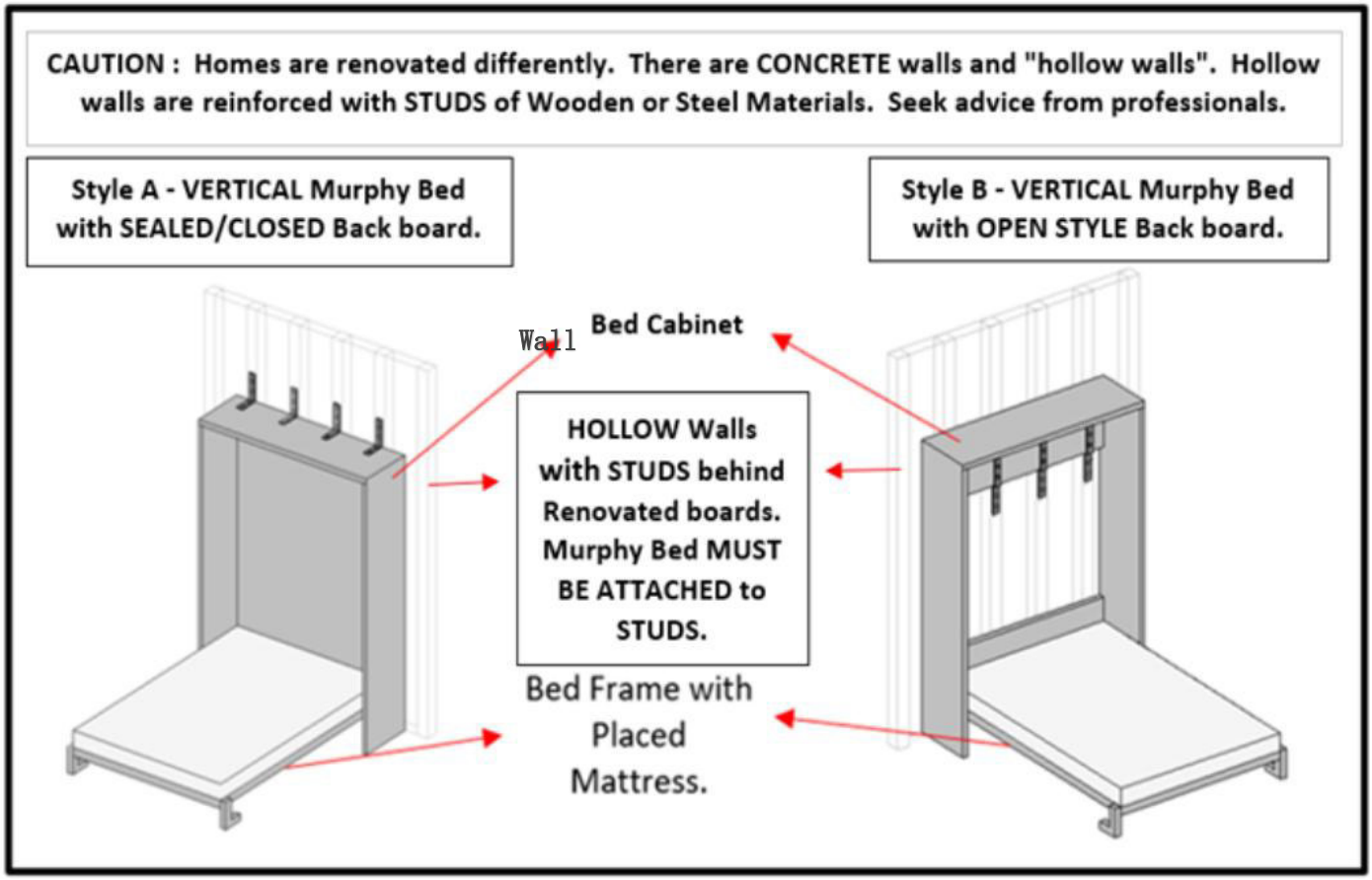

10.) This Murphy Bed is designed for home use and not intended for commercial use.

11.) This Murphy Bed is not intended to be moved, modified, uninstalled or disassembled once professionally installed.

C.) MOUNTING INFO & HARDWARE.

1.) REMINDERS :

a.) **In the event, that this pre-packed Screws Set does not match to the walls in your home – DO NOT USE / DISCARD these hardware.**
b.) **ADHERE to the Professional Consultant-Contractor** instructions and information on the **RELEVANT** mounting hardware that suits your wall.
c.) Procurement of these **RELEVANT** hardware is an arrangement made between your Consultant-Contactor and you.

2.) A step ladder (not provided) is needed to attach the L-Brackets to the wall, at the Top of the Murphy Bed. **DO NOT** lean against the Top of the Murphy Bed, it may cause sagging.

Murphy Bed Style A

L-Bracket Fixture to Wood Studs

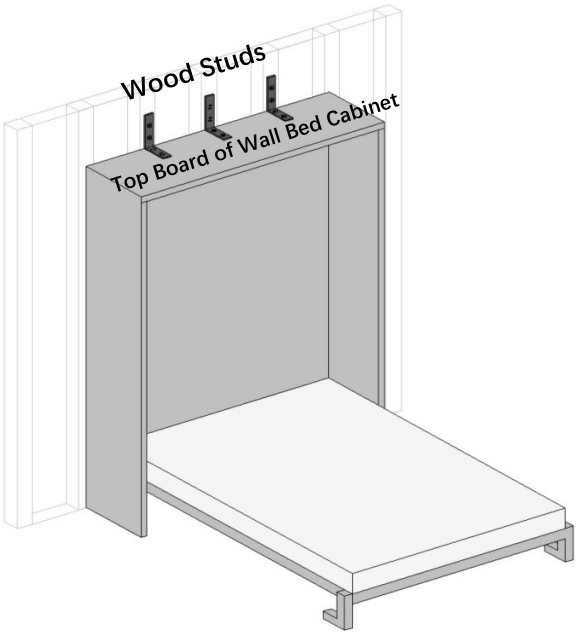

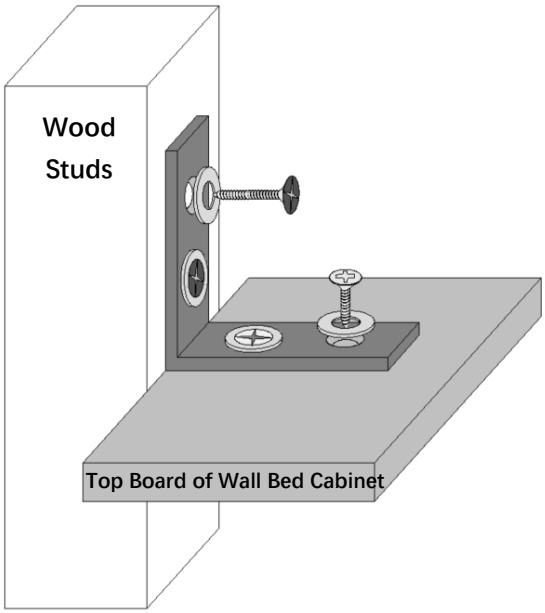

Z-Bracket Fixture to Wood Studs

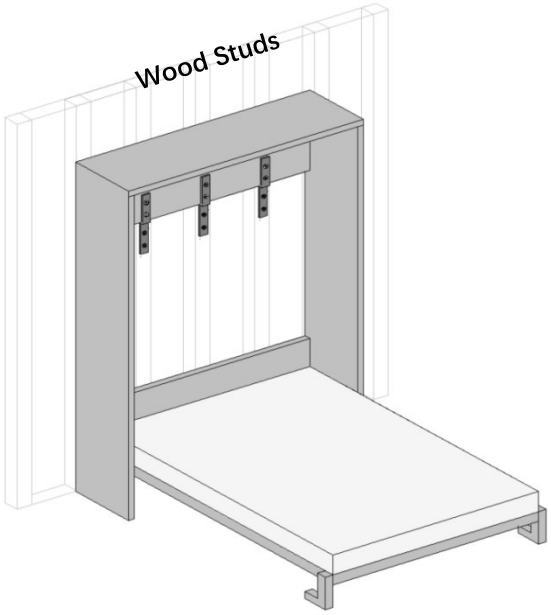

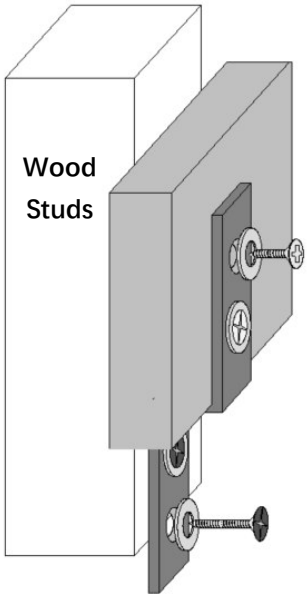

D.) IDENTIFICATION of TOOLS and ATTACHMENT SKILL.

The parts and components to assemble the Bed Frame are stated in the Assembly Instructions. Follow the instructions carefully.

For an efficient assembly, after opening the cartons shipped to you :

a.) open and lay out all parts and components in sequence;
b.) account for every part, hardware and component;
c.) then lay out the parts close to each other;

Assemble and tighten each bolt / nut / screw up to 80% to allow for the Wall Bed Frame and Shelving/Storage Cabinet to be HELD together.

Upon FINAL assembly where all the parts and components are FITTED precisely, in a sequential manner – proceed to tighten each bolt & nut & screw gradually.

CAUTION :

1.) **The METAL PLATES to the sides of the Side Rails – MUST BE FULLY and SECURELY SECURED to the SIDE RAILS.**
2.) **The Piston L-Brackets that are attached to the INNER WALL of the Wall Bed Cabinet – MUST BE FULLY and SECURED to these Inner Walls.**
3.) **These Metal Plates and the L-Brackets – are the components that are holding the Pneumatic Pistons that allow your Bed to "travel" to an OPEN or CLOSED position.**
4.) **Frequent Inspections of these Metal Plates / Brackets and Pneumatic Pistons Bolts, up to Once a Month – to ascertain these DO NOT BECOME LOOSE. For if these bolts to the Wall Bed Frame , Shelving/Storage Cabinet Pneumatic Pistons are loose, may cause the BED FRAME to become DISLODGED and cause injuries.**

REMINDER : NEVER FULLY TIGTHEN any screw / nut or bolt in one session. If you DO TIGHTEN the hardware all the way into the core of the wood, this cause the parts to become skewed that would impact other parts of the item not being able to be aligned to its mounting points for assembly.

E.) ALL ASSEMBLY WORK REQUIRES A TEAM OF NO LESS THAN 2 ADULTS.

Reminder : Per above info, the cartons and products are heavy – therefore exercise CAUTION at all times and ENSURE YOUR TEAM OF NO LESS THAN 2 for the entire ASSEMBLY.

F.) ASSEMBLY OF WALL BED CABINET.

Identify all parts and components for the Wall Bed Cabinet.
Assemble the Wall Bed Cabinet according to the Assembly Instructions.

Upon the completion assembly of the Wall Bed Cabinet, make a final inspection that all joints and parts are fully and securely attached.

CLEAR all debris in the area where your Murphy Bed is going to be attached to the wall.

Move this FULLY ASSEMBLED WALL BED CABINET and position this WALL BED CABINET some 2 feet to 3 feet away from the designated Wall, where you have previously made markings.

SAFETY REMINDER – YOU MUST HAVE 2 ADULTS to HOLD and STABILISE this WALL BED CABINET, Only after the Murphy Bed is FULLY SECURED to the wall, the 2 adult persons who are holding down the entire Murphy Bed, can now be released for this action.

G.)THE FIXATION OF THE WALL BED CABINET.

Fix the wall bed cabinet to the wall using wall-mounted hardware, and check to ensure that the wall bed cabinet is securely fastened to the Wood Studs or Concrete Solid Wall.

REMINDER : FOLLOW the INSTRUCTIONS from your Professional Consultant / Contractor.

SEQ	Bed Description	Bed Size	Details.
1	Single/Twin(XL)	~38*75/80~ inches	Attach at least 2 pieces of L or Z Hardware onto the Wall or Studs;
2	Full	54*75inches	Install at least 3 pieces of L or Z Hardware onto the Wall or Studs;
3	Queen	60*80inches	Install at least 3 pieces of L or Z Hardware onto the Wall or Studs;
4	King	76*80inches	Install at least 4 pieces of L or Z Hardware onto the Wall or Studs;
5	Other Bed Size		Other Bed Sizes - seek advice from your Contractor

H.) ASSEMBLY of BED FRAME.

Identify all parts and components for the Bed Frame.
Assemble the Bed Frame according to the Assembly Instructions.

Upon completion of assembly of the Bed Frame, make a final inspection that all joints and parts are fully and securely attached.

I.)ATTACHMENT OF BED FRAME TO WALL BED CABINET.

Using the lifting hardware (compressed pneumatic/hydraulic piston and other hardware fitting), follow the installation instructions to securely connect the bed frame and the wall bed cabinet together. This process requires NO LESS THAN 2 adults.
You may need to – LIGHTLY slide forward-backward to adjust and create gap space so as to enable the Pneumatic Pistons to be hooked to both ends of the hanging bolts in the Inner Wall of the L-BRACKET

Fully Secure and Tighten these Bolts at each end of the Pneumatic Pistons.

J.) Attachment of Safety Latches.

Upon completion of Step I above, ensure the entire structure of Bed Frame to Wall Bed Cabinet is fully and securely attached as ONE UNIT – affix the Safety Latches.

These Latches are to be reachable by Adults Only. Thus, the minimum height shall be no less than 5 feet (1.5m) from ground.

K.) Warning for Selecting a Mattress

Recommended Mattress weight ( )lb or ( )kg / Recommended Mattress thickness ( )in or ( )cm - Your Murphy Bed is engineered based on the bed frame weight, mattress weight, and the Neptune force system.

Therefore, load your bed with the RECOMMENDED MATTRESS Weight~~s~~, Size and Thickness as stated in the assembly instructions.

DO NOT LOAD any heavier or LARGER or LIGHTER Mattress than what is recommended here.

L.) MATTRESS PLACEMENT.

Have 1 to 2 persons – place equal strengths to the handles and gently and securely, PULL DOWN the Bed Frame until the Bed Frame is horizontally and level to the ground.

Have the other 2 persons – carry and place the Mattress (**within the recommended weight** and **thickness)** and gently place the Mattress on to the Bed Frame.

M.) PNEUMATIC PISTON NEWTON-LOAD STRENGTH.

You are hereby reminded that when the BED FRAME is EMPTY OF MATTRESS, the Bed Frame may NEED a FULL force to be pulled down before you can place the Mattress.

This PULLED DOWN RESISTANCE is a normal feature, as the Newton-Loaded Piston Force is in action.

N.) BED STRAP – GUIDE STRAP

Your Murphy Bed may or may not equipped with a Bed Strap.

This Bed Strap serves as a GUIDE STRAP to help you lift the Bed Frame approximately 6 inches

from its resting position. Then use both hands to FULLY LIFT the Bed Frame to its closed position.

SAFETY REMINDER :

1. **) <u>DO NOT USE THE BED STRAP</u> to PULL DOWN AND OPEN the BED FRAME from its CLOSED POSITION.**
2. **) DO NOT USE THE BED STRAP to PULL-LIFT-HOIST the BED FRAME from the OPEN-HORIZONTAL position to the CLOSED POSITION.**

Both of the above may cause injury or unnecessary strain to your arms.

O. <u>) USING YOUR MURPHY BED.</u>

For EVERY USE – follow Safety Precaution Measures to ensure the safety of your family members and pets is IMPORTANT.

Therefore, PRIOR TO OPENING / PRIOR TO CLOSING OF YOUR MURPHY BED - Make sure all Children / Non Ambulatory Persons and Pets are away.

<u>KEEP CHILDREN and NON-AMBULATORY persons from Unlatching the Safety Latches.</u>

P. <u>) CAUTION : DO NOT BE DISTRACTED During EVERY OPENING and CLOSING of your Murphy Bed.</u>

Every time you Pull to **OPEN** the Murphy Bed from its closed position OR **Lift-Pull to CLOSE** the Murphy Bed to stow it into the Wall Bed Cabinet -

- give these actions your focused and dedicated attention.
- **DURING EVERY OPENING and CLOSING of your Murphy Bed** - always ensure you have an Adult Partner close by for added assistance, where necessary.
- **DO NOT OVER EXERT ADDED FORCE to OPEN the Bed or to CLOSE the Bed frame**. For if you do, the resistance of the Pneumatic Piston will only make it harder for you to complete the task.
- **TO CLOSE the Murphy Bed** : depending on your height – stand some 6inches to 10inches away from the Foot Board edge. Use both your hands and place both hands at about equal distance from the middle of the Bed Frame, spaced at 2 to 3 feet between your hands - GENTLY LIFT-PULL to Close your Murphy Bed.
- **TO OPEN the Murphy Bed** : using equal force – **place your hands to the installed grab handle** and GENTLY PULL towards you to Open. **As you pull Open the Murphy Bed – proceed to move backwards, slowly and steadily, so as to give way to the Murphy Bed's OPEN Position.**

- During **EVERY OPENING or CLOSING** of the Murphy Bed - at about your hip level - you may find that you need to rotate your hand / wrist - take caution here to prevent injury.
- During EVERY OPENING and CLOSING, keep Children and Pets and Non Ambulatory Persons away.
- **<u>NEVER</u>** allow your children to treat this Murphy Bed as a Hide and Seek place of fun or

jump on the bed.

- **Care & Maintenance** - Depending on the frequency of use of your Murphy Bed, it is recommended that you take precautionary Care and Maintenance. It is advisable to conduct NO LESS THAN 2 to 3 checks annually on these mounting points & pneumatic pistons to ensure that these are securely bolted. Where necessary, use a vacuum cleaner to clear all dust and then wipe down with a damp cloth, then proceed with your maintenance work.

Safety Latches - Your Murphy Bed comes with the Safety Latch. These are to be attached at, both the TOP LEFT and TOP RIGHT hand upper portion**, minimum of 5 feet (1.5m) from ground**, of the Bed Frame / Wall Bed Cabinet. Monitor and Inspect these frequently.

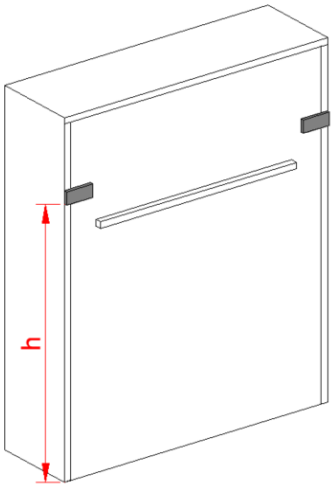

- Whenever NOT in use and after the Murphy Bed has been LIFTED and stowed in its **CLOSED POSITION - ALWAYS LATCH UP**.

Frequently Asked Questions.
Malfunctioned Pistons.

How do you know when the Murphy Bed's Piston has malfunctioned?
It would be quite evident in that :

a. **) the Bed Frame may become LOPSIDED and**
b. **) the Lift-PULL force to CLOSE may be "heavier" than before.**

IMMEDIATELY - STOP USING YOUR MURPHY BED.
SEEK and CONSULT professional maintenance service to ascertain the problem and repair and or have the pneumatic pistons changed.

OPTION 1

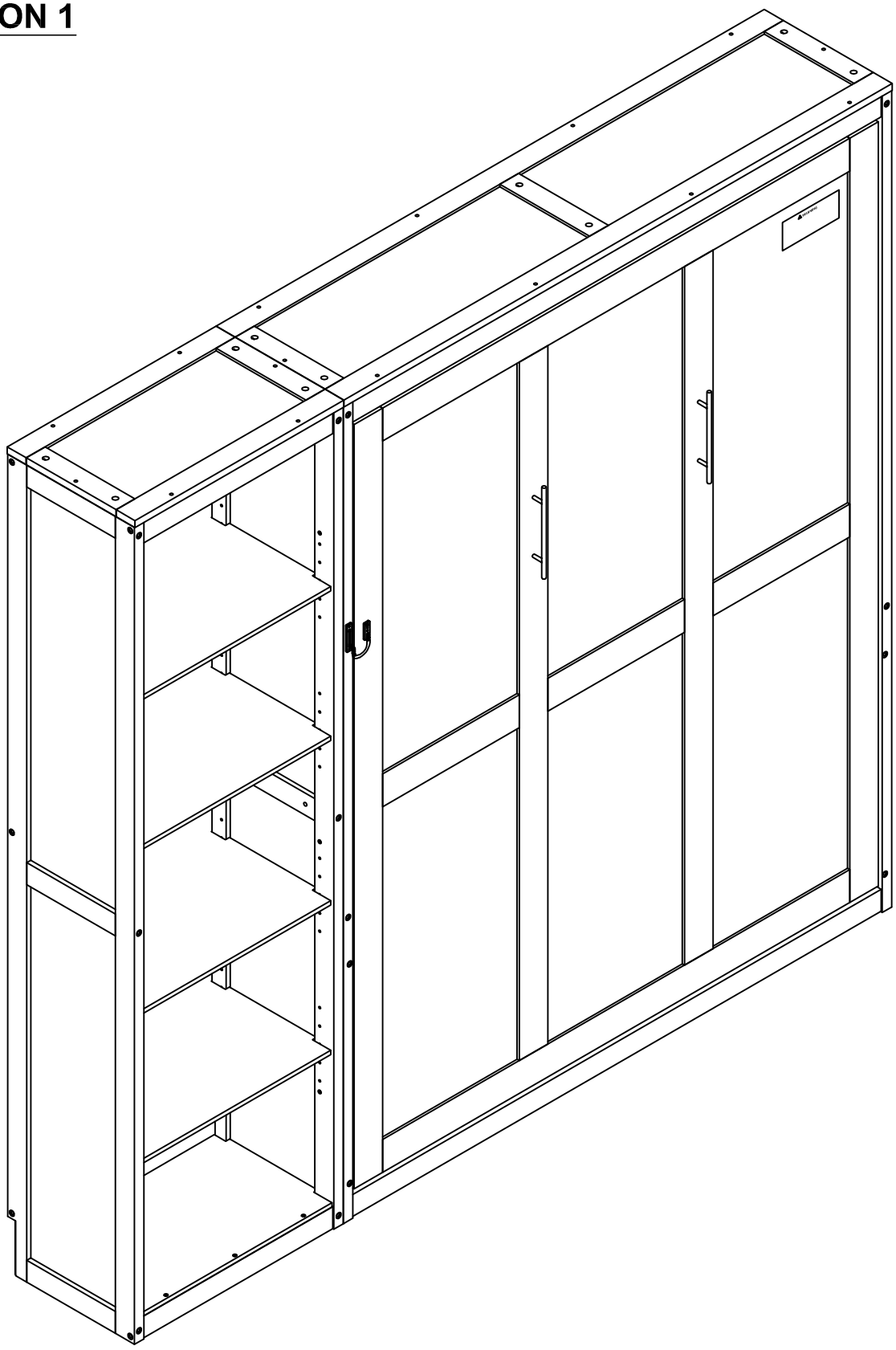

OPTION 2

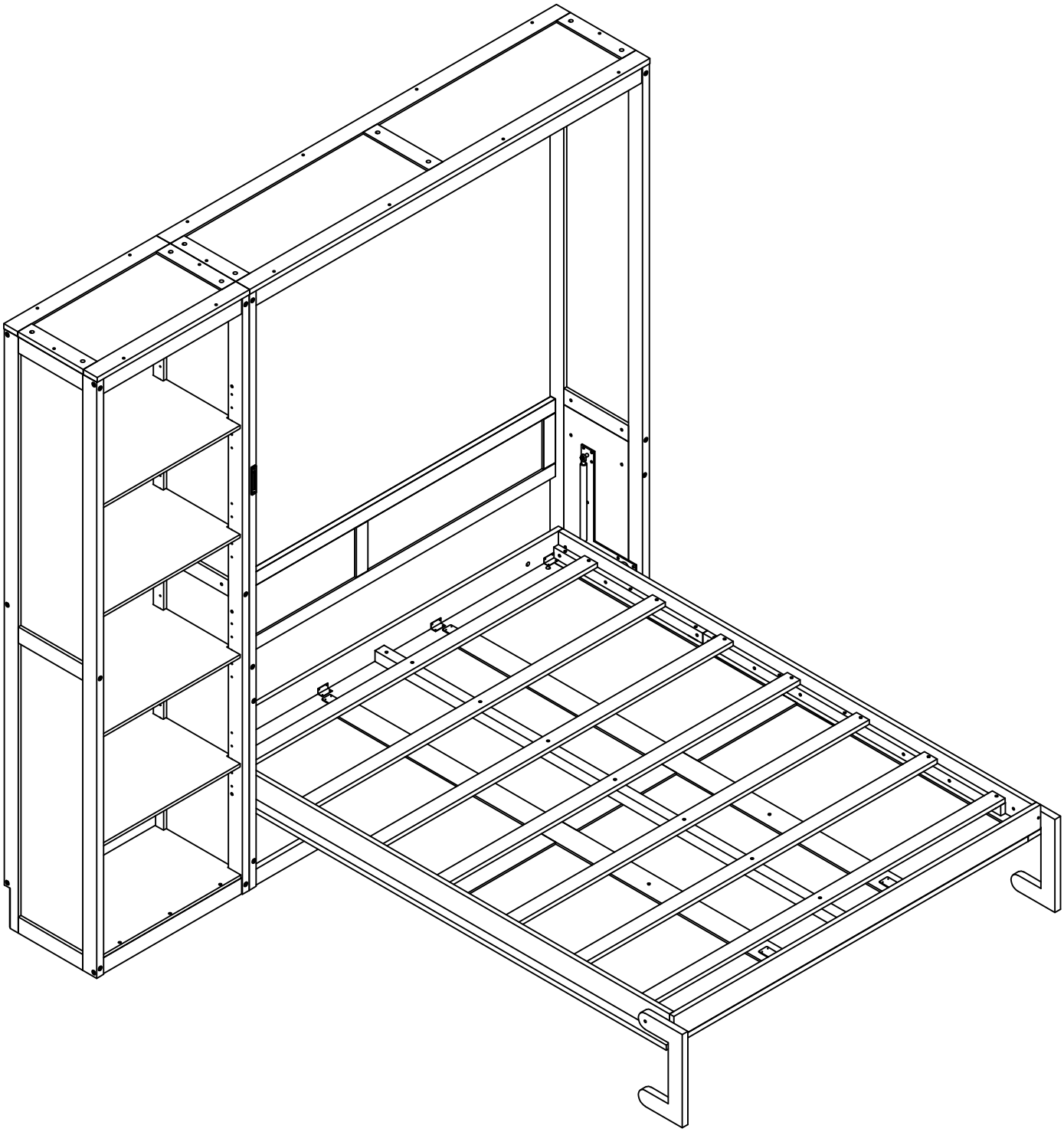

OPTION 3

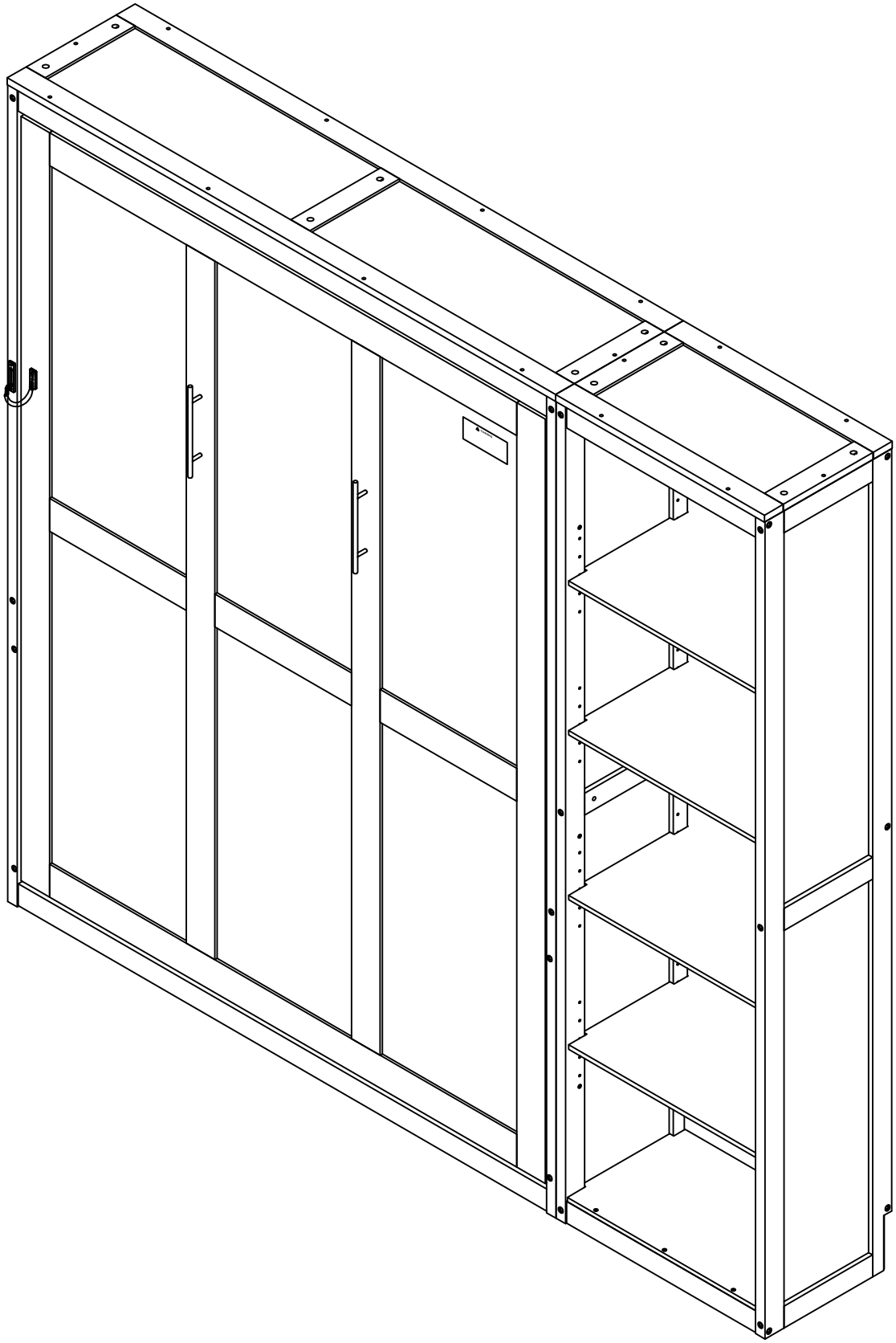

OPTION 4

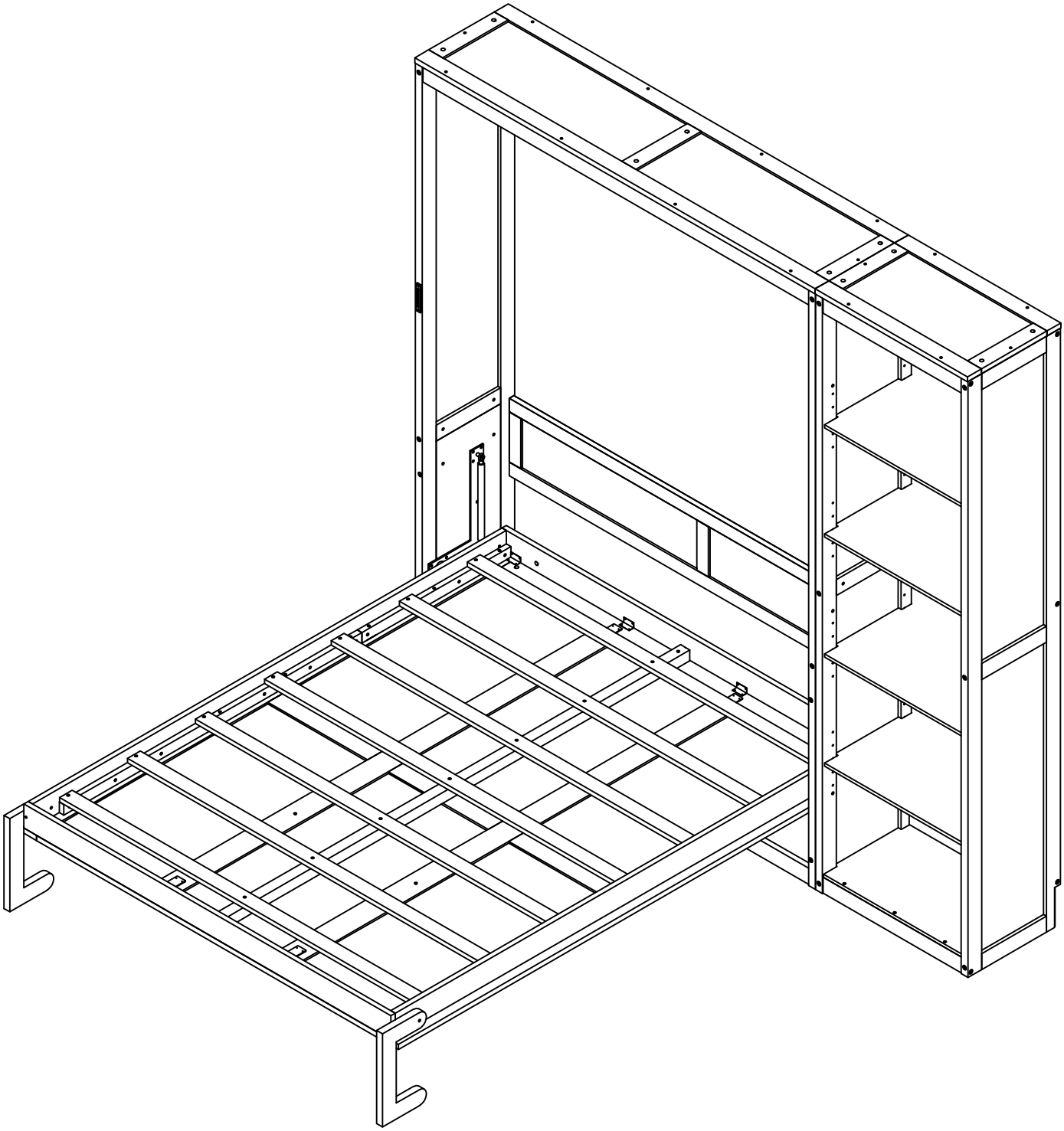

ASSEMBLY INSTRUCTION
INSTRUCTIONS DEMONTAGE

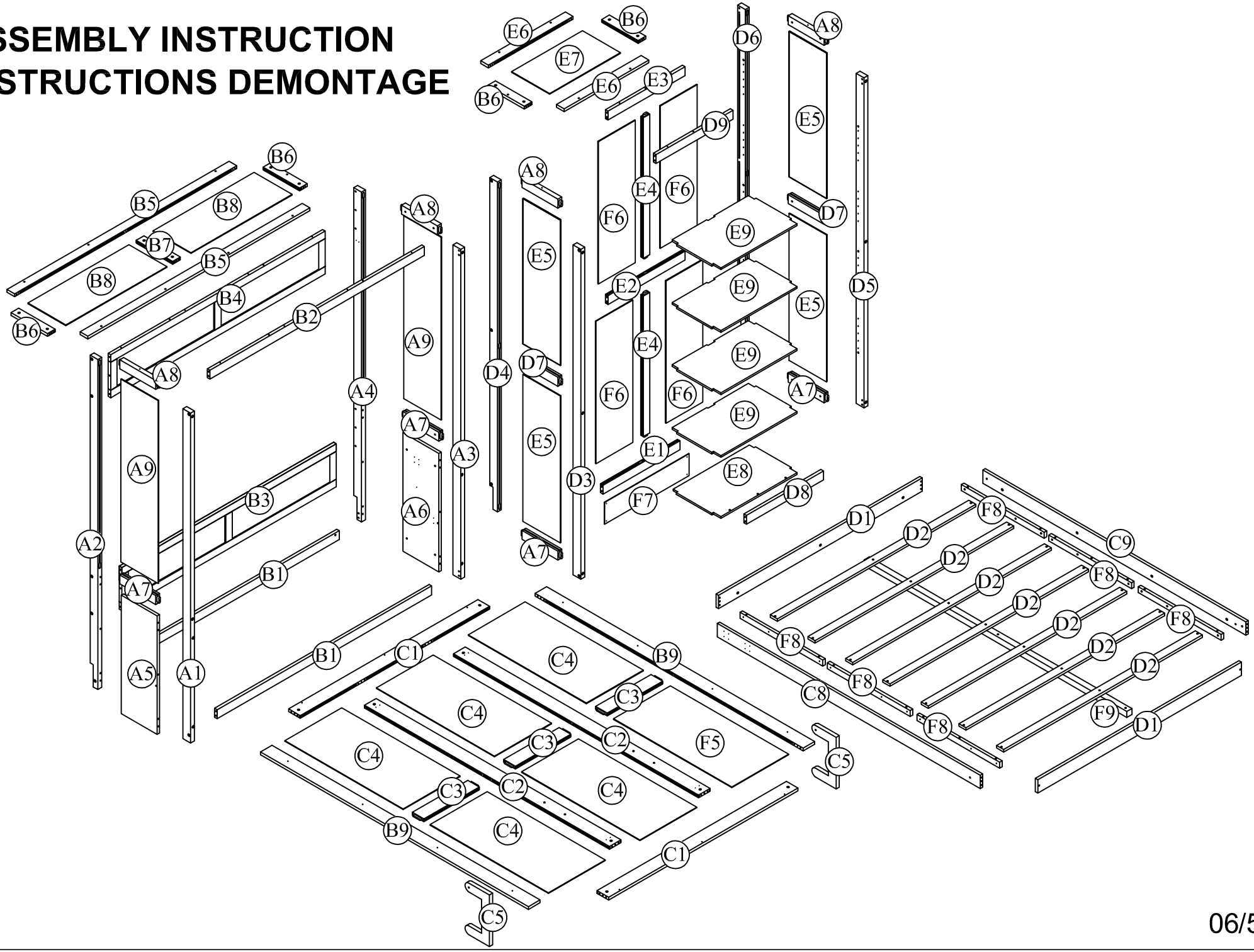

Part List (Box 1-N708P494076)
Liste des pièces

A5 Panel-1pc Planche	A6 Panel-1pc Planche	A7 WoodBar-4pcs Barres de bois
A8 WoodBar-4pcs Barres de bois	B6 WoodBar-4pcs Barres de bois	B7 WoodBar-1pc Barres de bois
B8 Panel-2pcs Planche	C3 WoodBar-3pcs Barres de bois	C4 Panel-5pcs Planche
C5 WoodBar-2pcs Barres de bois	D7 WoodBar-2pcs Barres de bois	D8 WoodBar-1pc Barres de bois
D9 WoodBar-1pc Barres de bois	E1 WoodBar-1pc Barres de bois	E2 WoodBar-1pc Barres de bois
E3 WoodBar-1pc Barres de bois	E4 WoodBar-2pcs Barres de bois	E6 WoodBar-2pcs Barres de bois
E7 Panel-1pc Planche	E8 Panel-1pc Planche	E9 Panel-4pcs Planche
F5 Panel-1pc Planche	F8 WoodBar-6pcs Barres de bois	

Part List & Hardware List (Box 2-N708P494077)
Liste des pièces et liste du matériel

A9

Panel-2pcs
Planche

B1

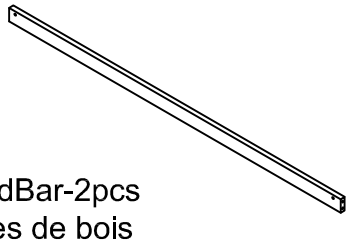

WoodBar-2pcs
Barres de bois

B2

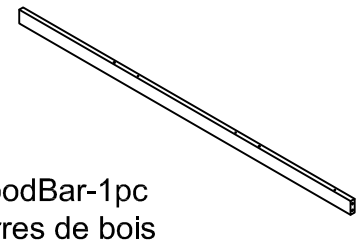

WoodBar-1pc
Barres de bois

B3

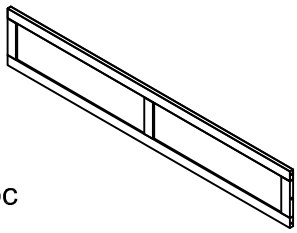

Panel-1pc
Planche

B4

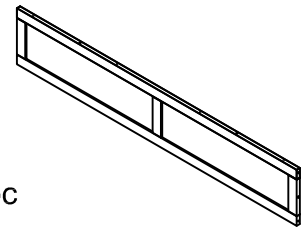

Panel-1pc
Planche

C1

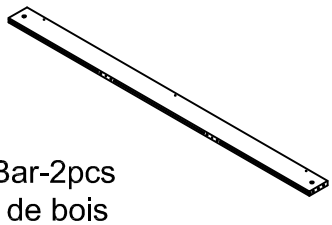

WoodBar-2pcs
Barres de bois

C2

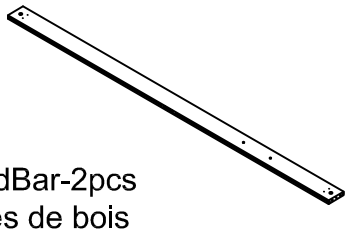

WoodBar-2pcs
Barres de bois

D1

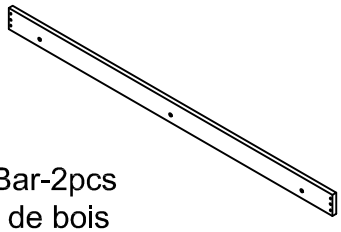

WoodBar-2pcs
Barres de bois

D2

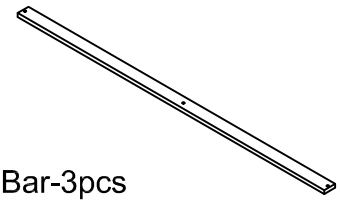

WoodBar-3pcs
Barres de bois

E5

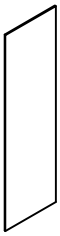

Panel-4pcs
Planche

F4

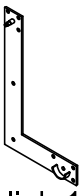

Metal corner link-1pc
Lien d'angle métallique

F6

Panel-4pcs
Planche

F7

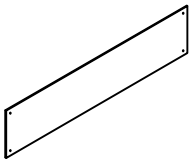

Panel-1pc
Planche

F1

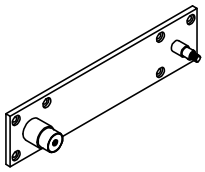

Metal corner link-2pcs
Lien d'angle métallique

F2

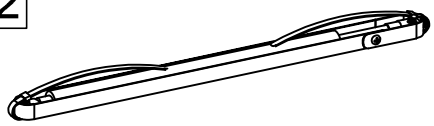

Piston Steam-2pcs
Vapeur de piston

F3

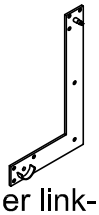

Metal corner link-1pc
Lien d'angle métallique

Part List (Box 3-N708P494078)
Liste des pièces

A1 Leg-1pc Jambe	A2 Leg-1pc Jambe	A3 Leg-1pc Jambe
A4 Leg-1pc Jambe	B5 WoodBar-2pcs Barres de bois	B9 WoodBar-2pcs Barres de bois
C8 WoodBar-1pc Barres de bois	C9 WoodBar-1pc Barres de bois	D3 Leg-1pc Jambe
D4 Leg-1pc Jambe	D5 Leg-1pc Jambe	D6 Leg-1pc Jambe
F9 WoodBar-1pc Barres de bois	D2 WoodBar-4pcs Barres de bois	

Hardware List (Box 2-N708P494077)
Liste du matériel

1 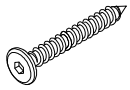 Screws 1/4" x40mm- 16pcs Vis	2 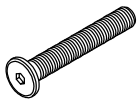 Bolts Ø1/4" x 40 mm - 2pcs Boulon	3 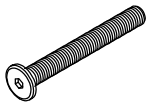 Bolts Ø1/4" x 60 mm - 4pcs Boulon
4 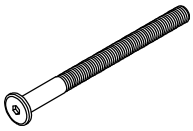 Bolts Ø1/4" x 80 mm - 28pcs Boulon	5 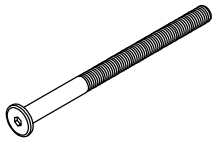 Bolts Ø1/4" x 100 mm - 24pcs Boulon	6 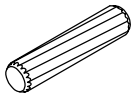 Wood dowel Ø8 x 30 mm - 82pcs Cheville en bois
7 Ø1/4" x 13 mm Horizontal-Hole bolts - 56pcs Boulons à trou horizontal	8 Cam bolt 32pcs Boulon à came	9 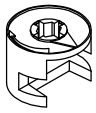 Cam lock Ø15 x 12 mm- 32pcs Serrure à came
10 Ø1/4" x 15 mm Canopy head though - 2pcs Tête à baldaquin	11 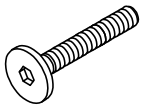 Bolts Ø1/3" x 40 mm - 2pcs Boulon	12 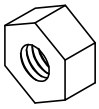 Nut 4pcs Écrou
13 Ø20 / Ø6 x 2 mm Washer 2pcs Rondelle	14 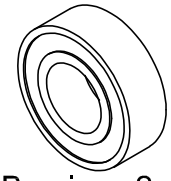 Bearings 2pcs Roulements	15 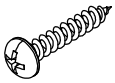 Wood Screws M3.5 x 12mm-16pcs Les vis à bois
16 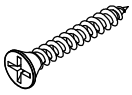 Wood Screws M4 x 20mm-39pcs Les vis à bois	17 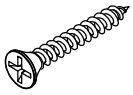 Wood Screws M4 x 30mm-48pcs Les vis à bois	18 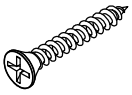 Wood Screws M4 x 40mm-6pcs Les vis à bois
19 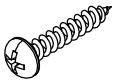 Wood Screws M4 x 15mm-52pcs Les vis à bois	20 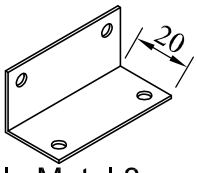 Angle Metal 8pcs Angle métallique	21 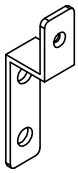 Angle Metal 3pcs Angle métallique

Hardware List (Box 2-N708P494077)
Liste du matériel

22 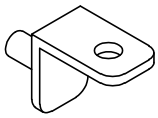 Angle Metal 16pcs Angle métallique	23 Bolts Ø1/6" x 25 mm - 4pcs Boulon	24 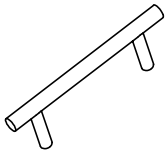 Handle 2pcs Poignée
25 Steel Bracket - 4pcs Support en acier	26 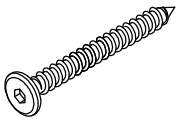 Screws 1/4" x70mm- 6pcs Vis	27 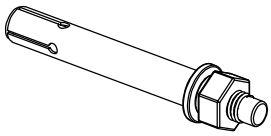 Ø10 x 75 mm metal anchors-6pcs ancrages métalliques
28 Allen Key - 2pcs Clé Allen	29 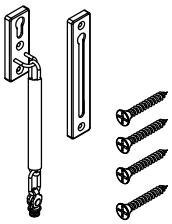 Lock - 1set Verrou	30 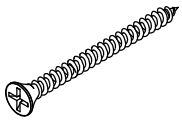 Wood Screws M4 x 50mm-21pcs Les vis à bois
31 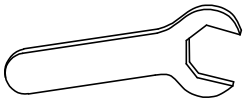 Wrench 1pc Clé		

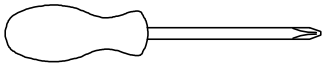

Assembly Tools Required (Not Included)

Outils d'assemblage requis (Non Inclus)

Please scan the QR code to see detailed instructions on how to assemble each step

Veuillez scanner le code QR pour consulter les instructions détaillées d'assemblage de chaque étape.

STEP 1:
Étape 1:

7	6	5	4
8(pcs)	6(pcs)	7(pcs)	1(pc)

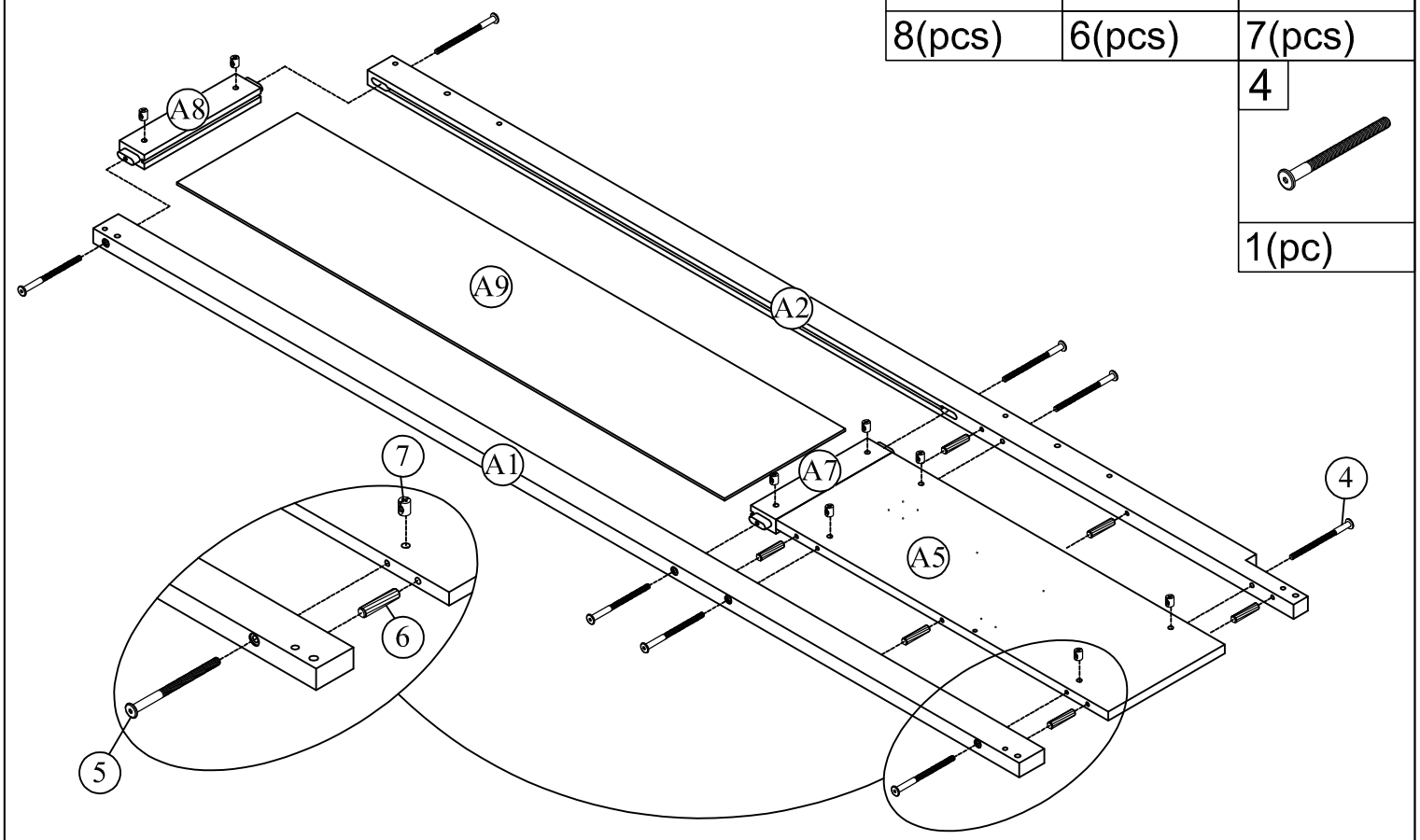

STEP 2:
Étape 2:

4	7	6	5
1(pc)	8(pcs)	6(pcs)	7(pcs)

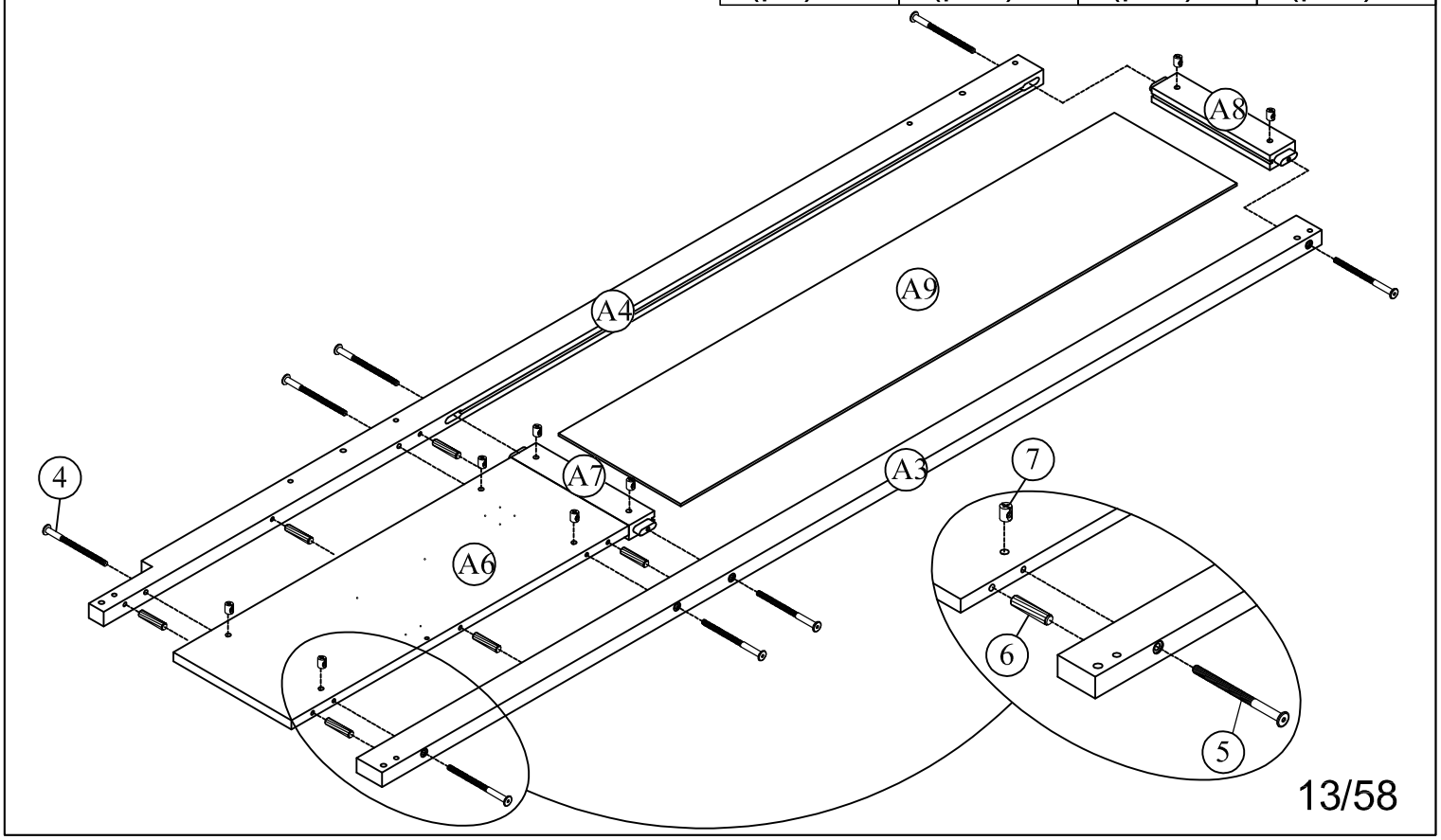

STEP 3:
Étape 3

7	6	4
14(pcs)	10(pcs)	14(pcs)

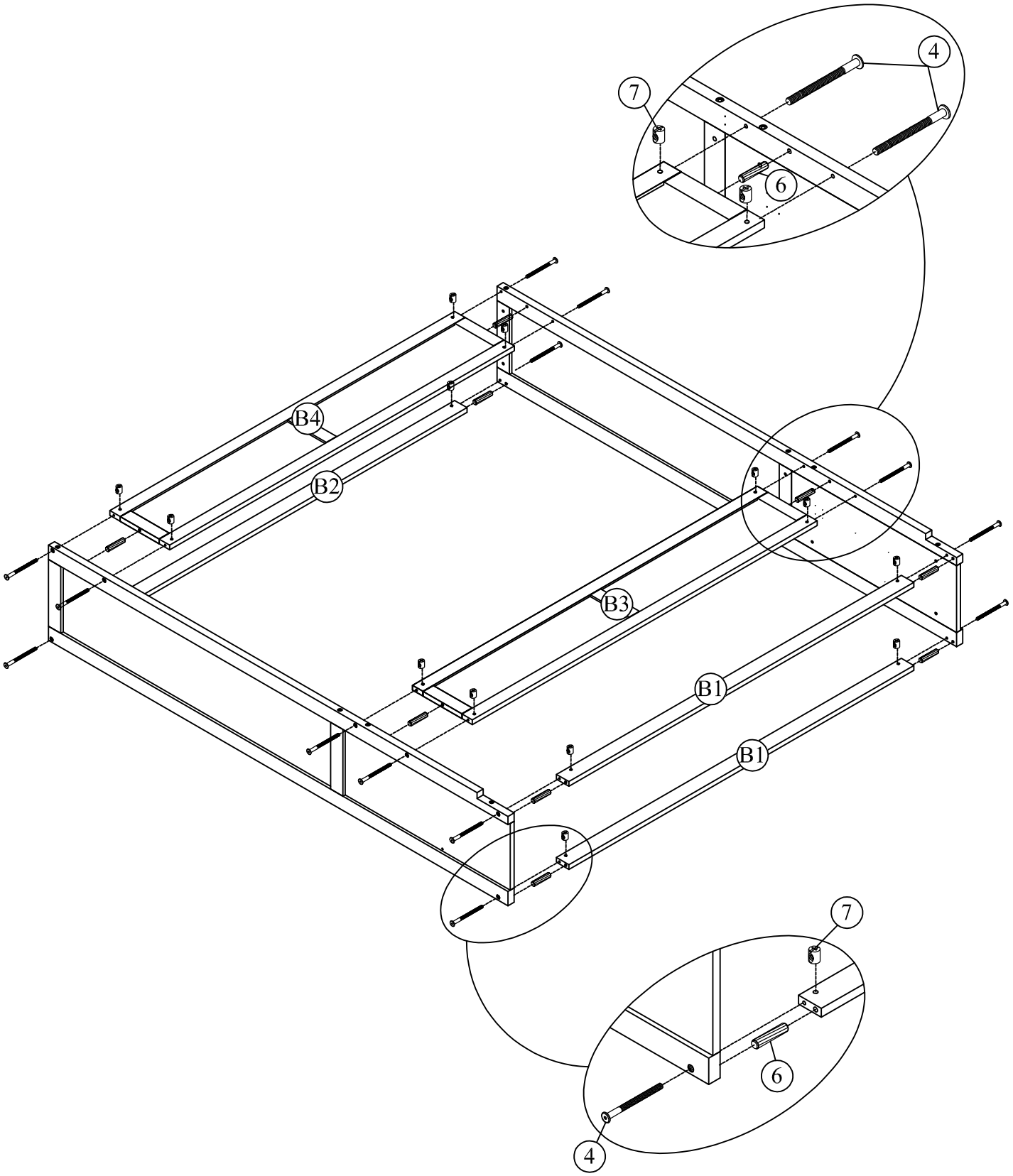

STEP 4:
Étape 4:

8
6(pcs)

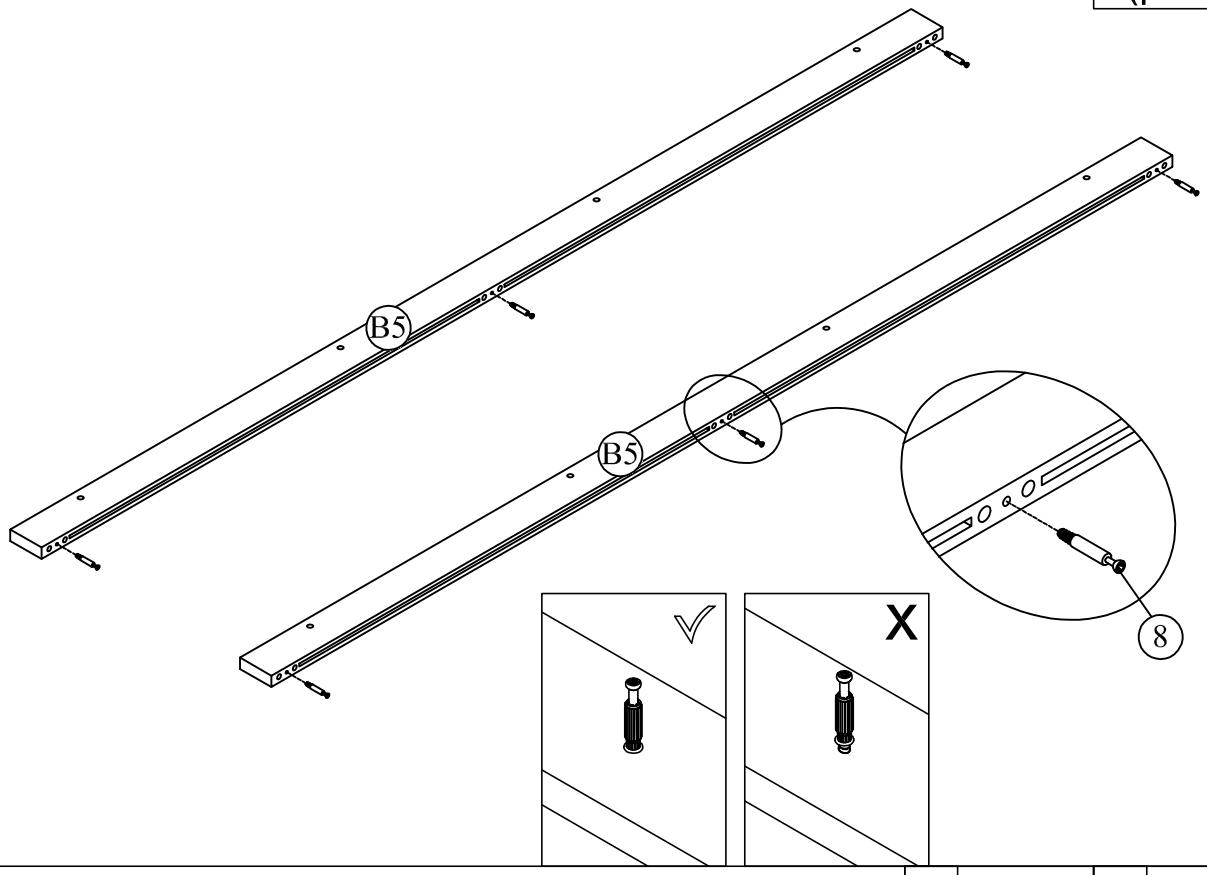

STEP 5:
Étape 5:

9	6
6(pcs)	12(pcs)

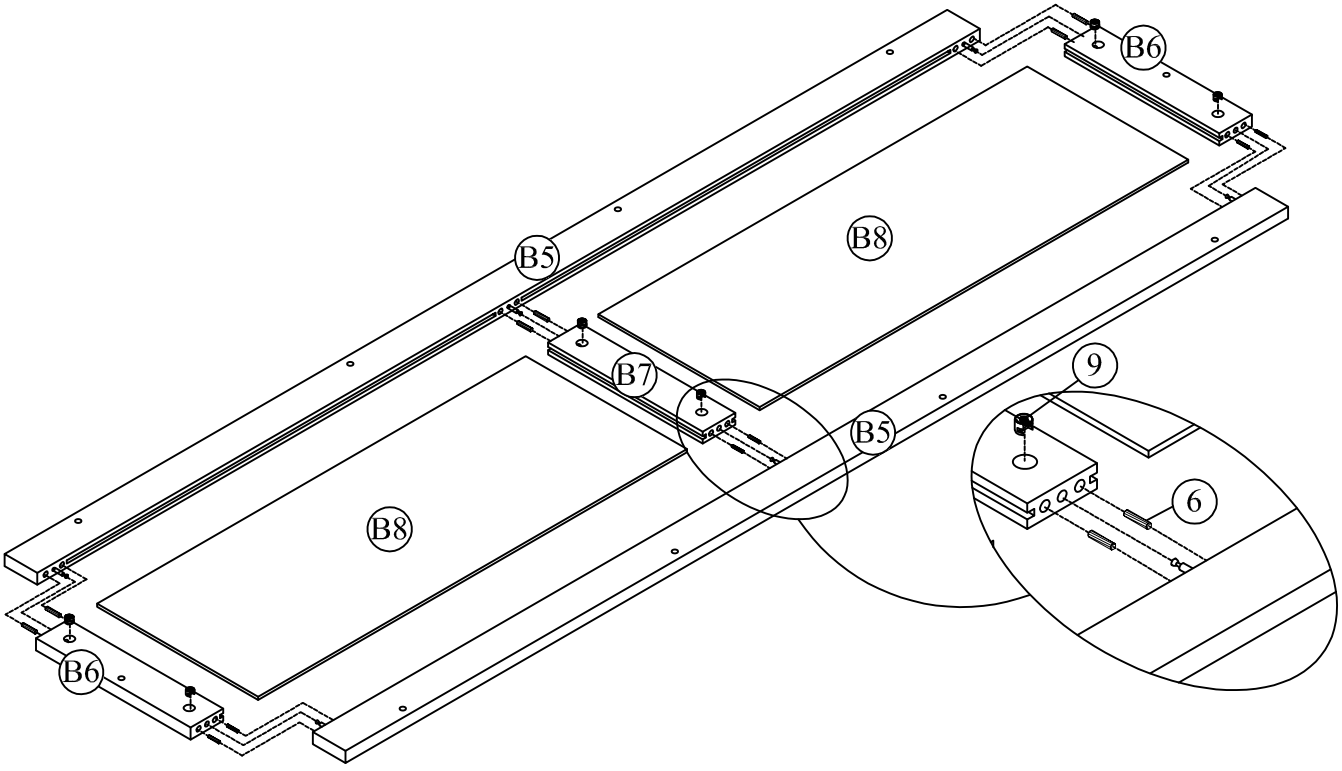

STEP 6:
Étape 6:

6	1
	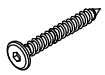
4(pcs)	10(pcs)

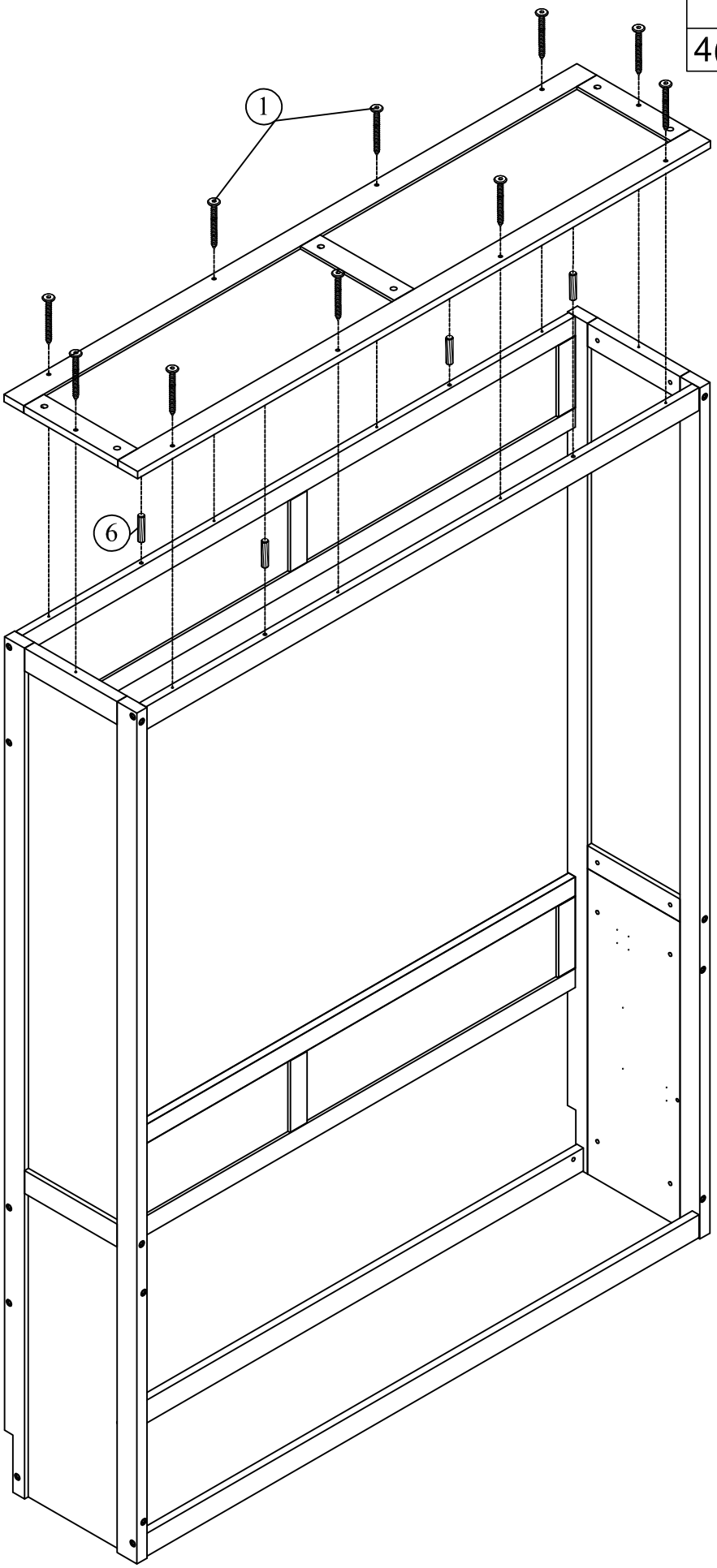

STEP 7:
Étape 7:

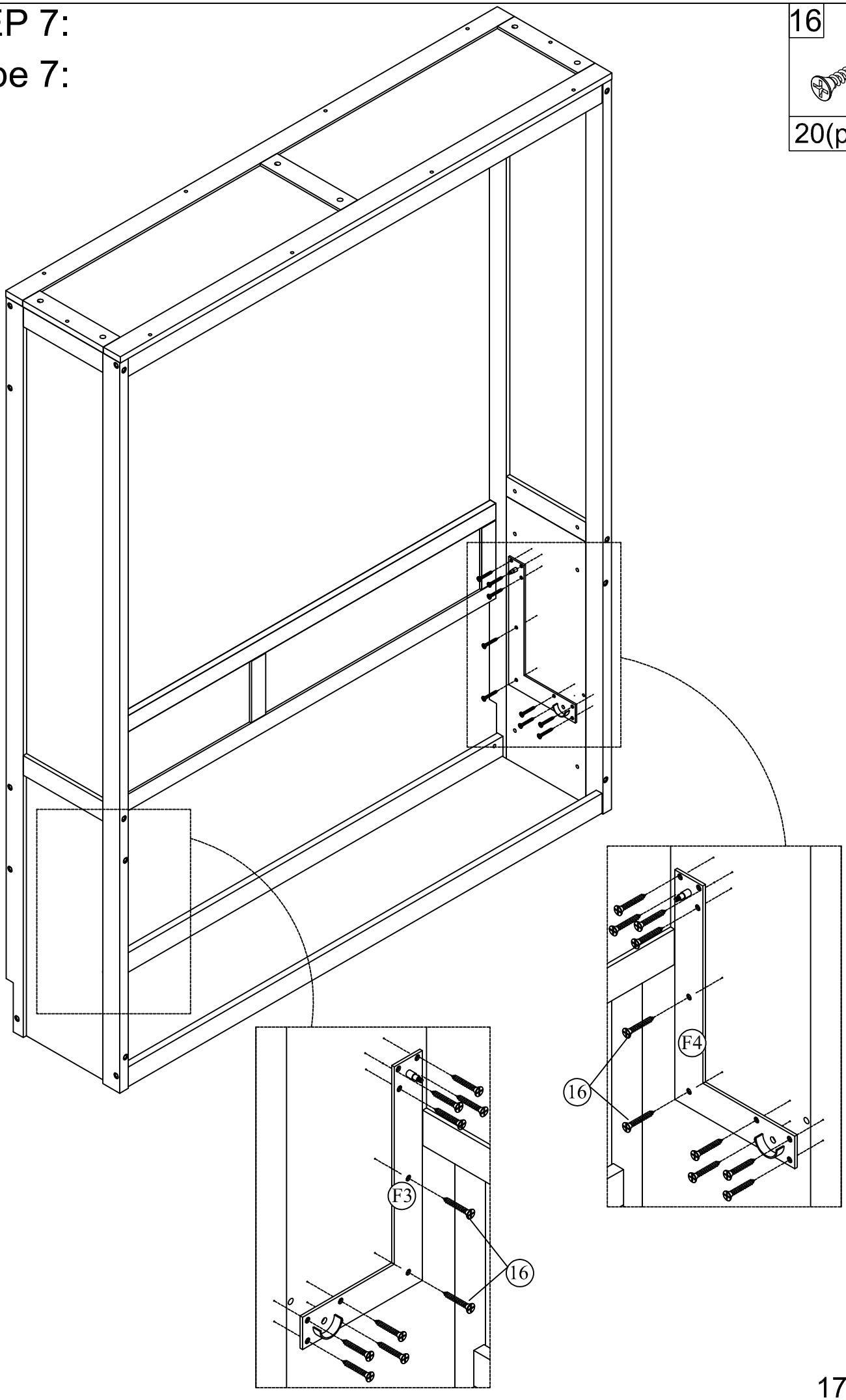

OPTION 1:

Partition wall made of wooden with plasterboard cladding.
Cloison en bois recouverte de plaques de plâtre.

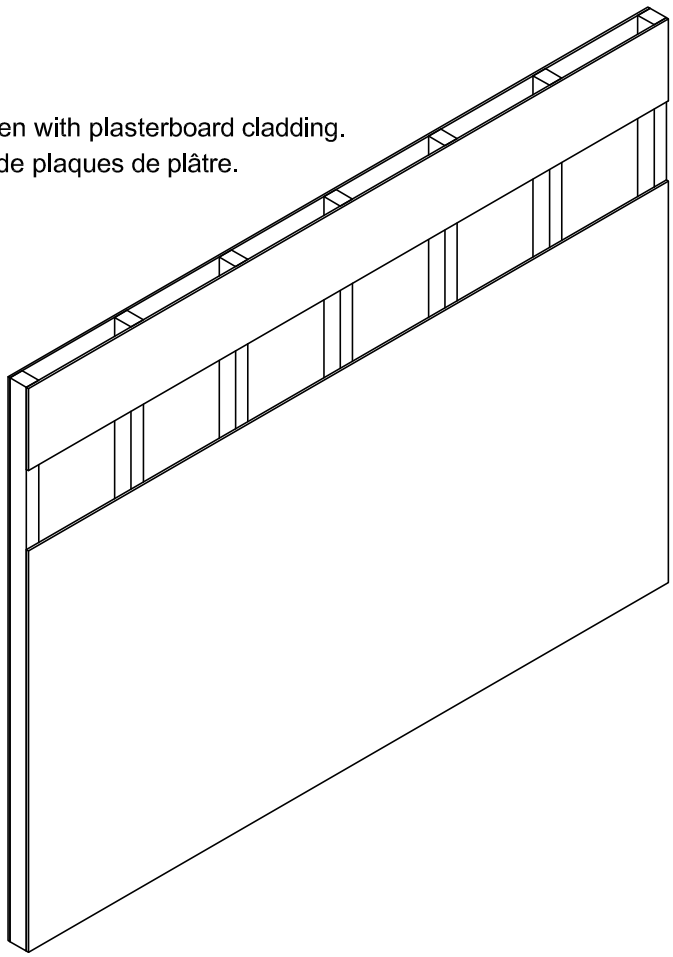

OPTION 1:

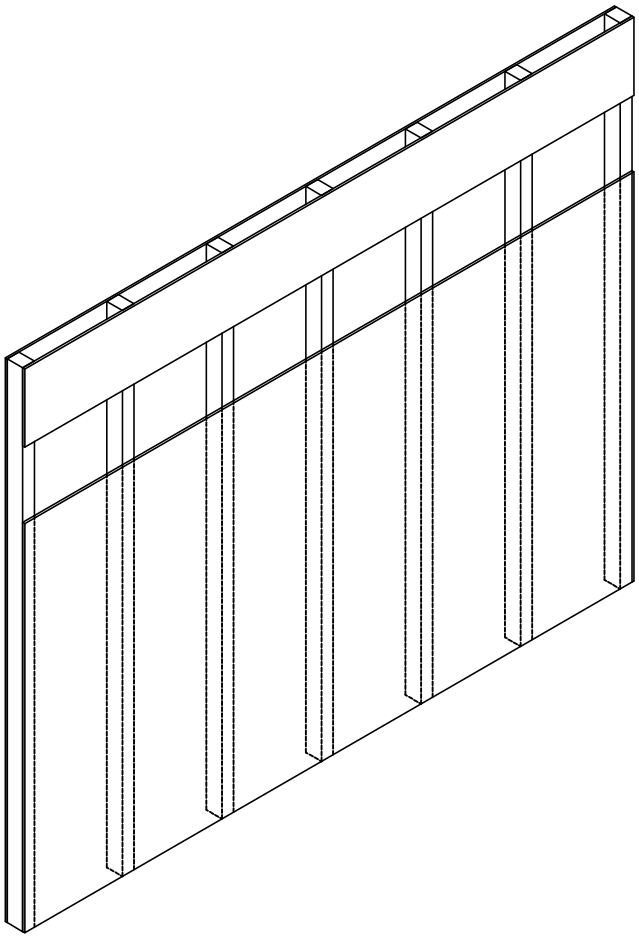

1- Determine the position of the bed in the room.

1- Déterminez la position du lit dans la pièce

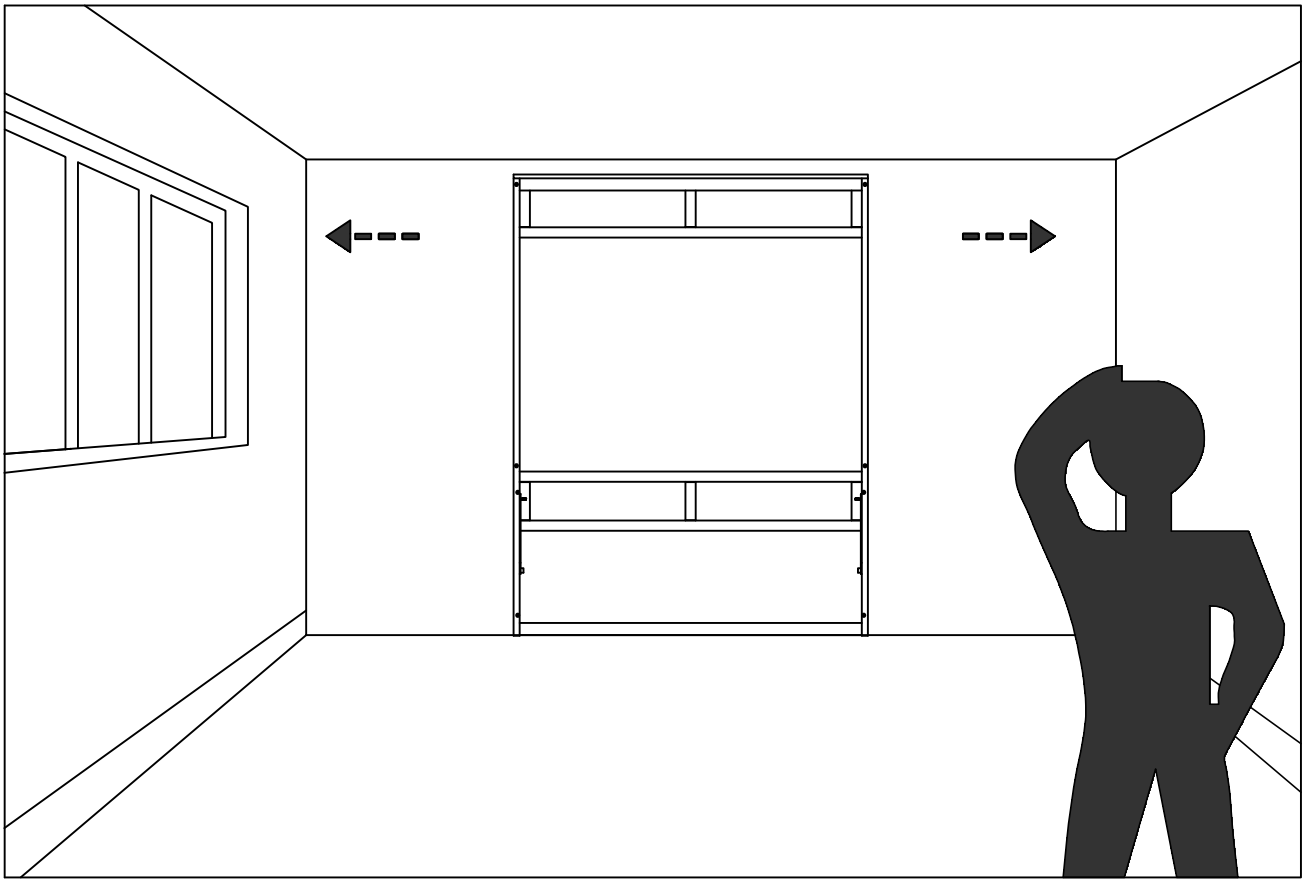

2- Put the bed back in its place. Please keep it vertical and horizontal.

2- Remettez le lit à sa place. Veuillez le garder vertical et horizontal.

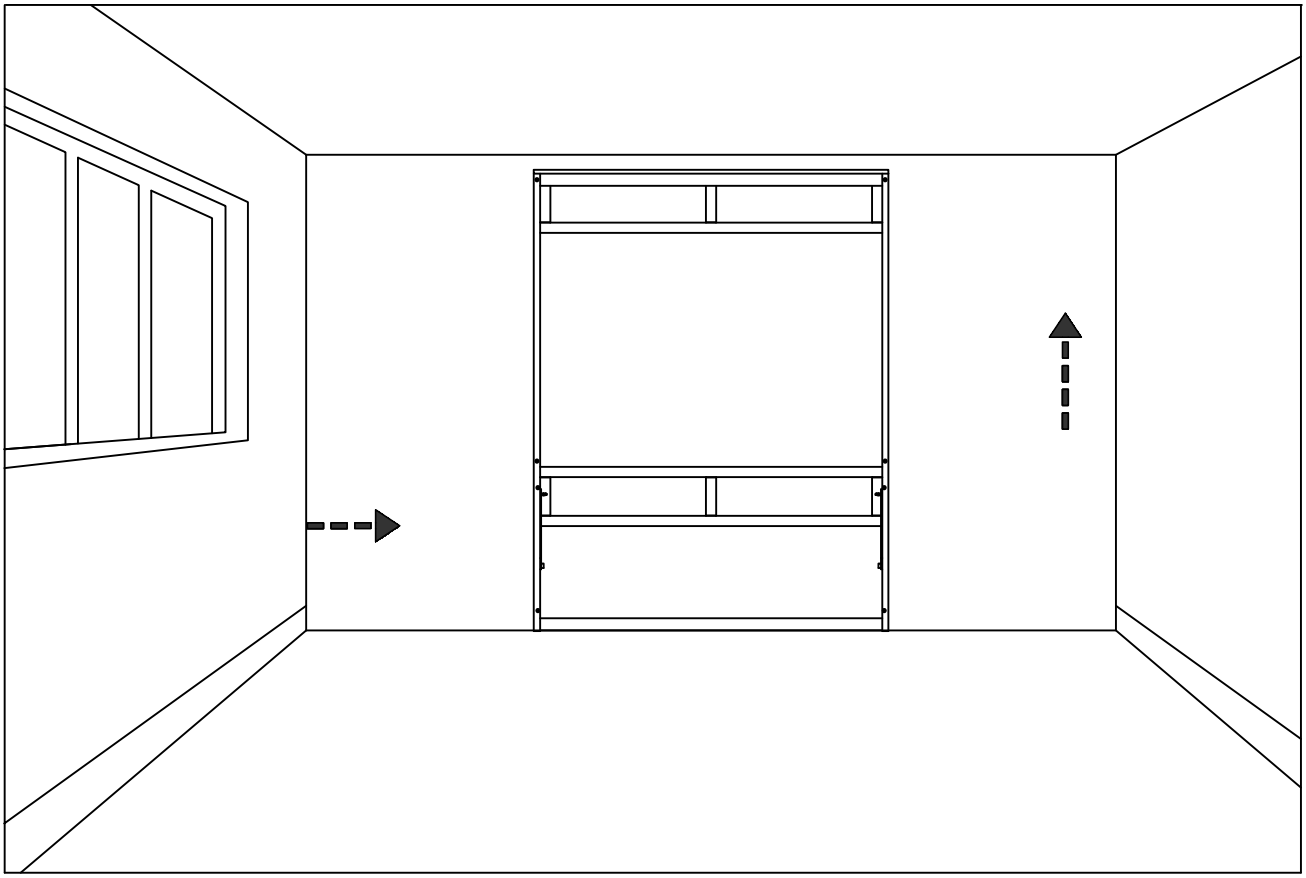

3- Mark the points drill holes according to actual products
3- Marquez les points de perçage en fonction des produits réels.

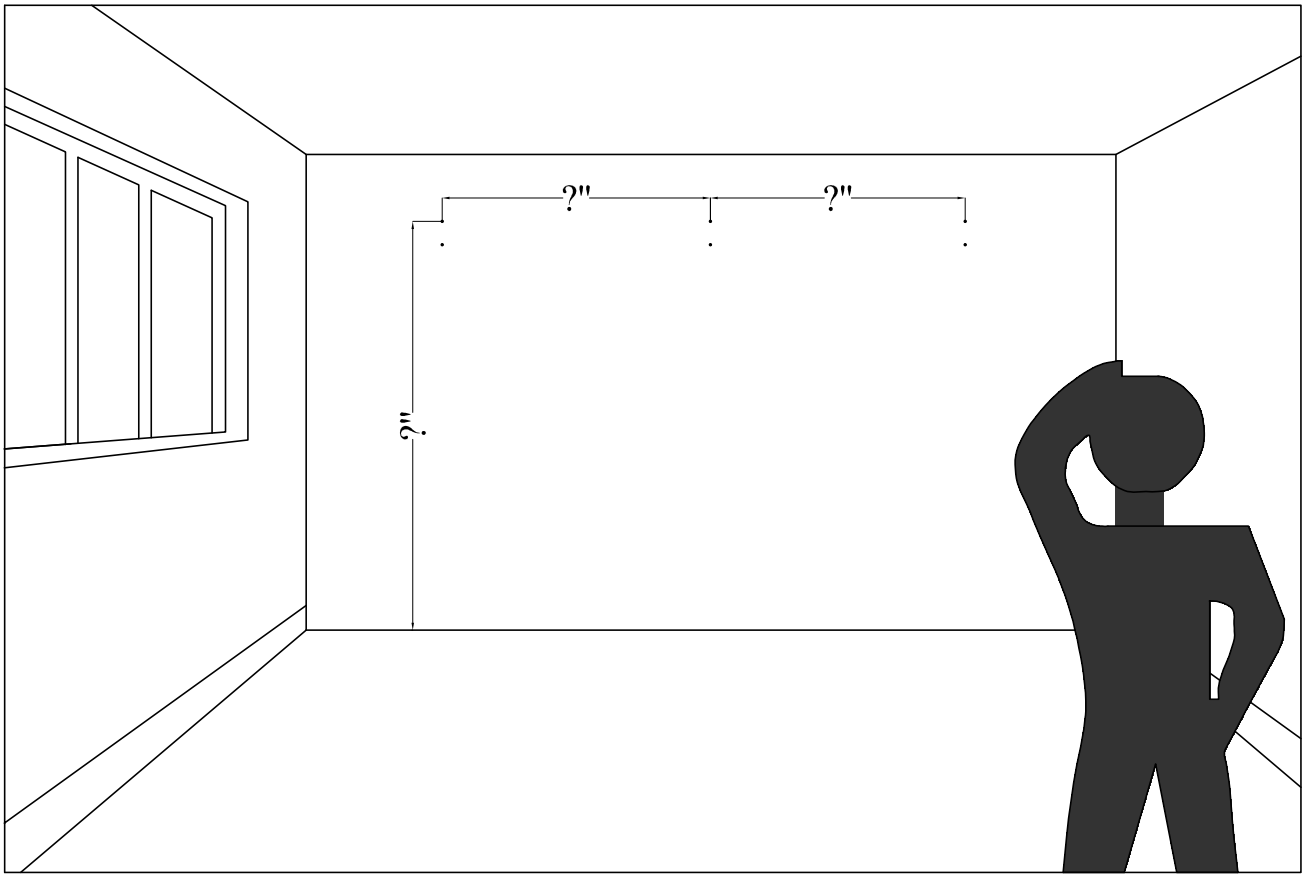

4- Drill holes at the marked locations in STEP 3.
4- Percez des trous aux emplacements marqués à l'ÉTAPE 3.

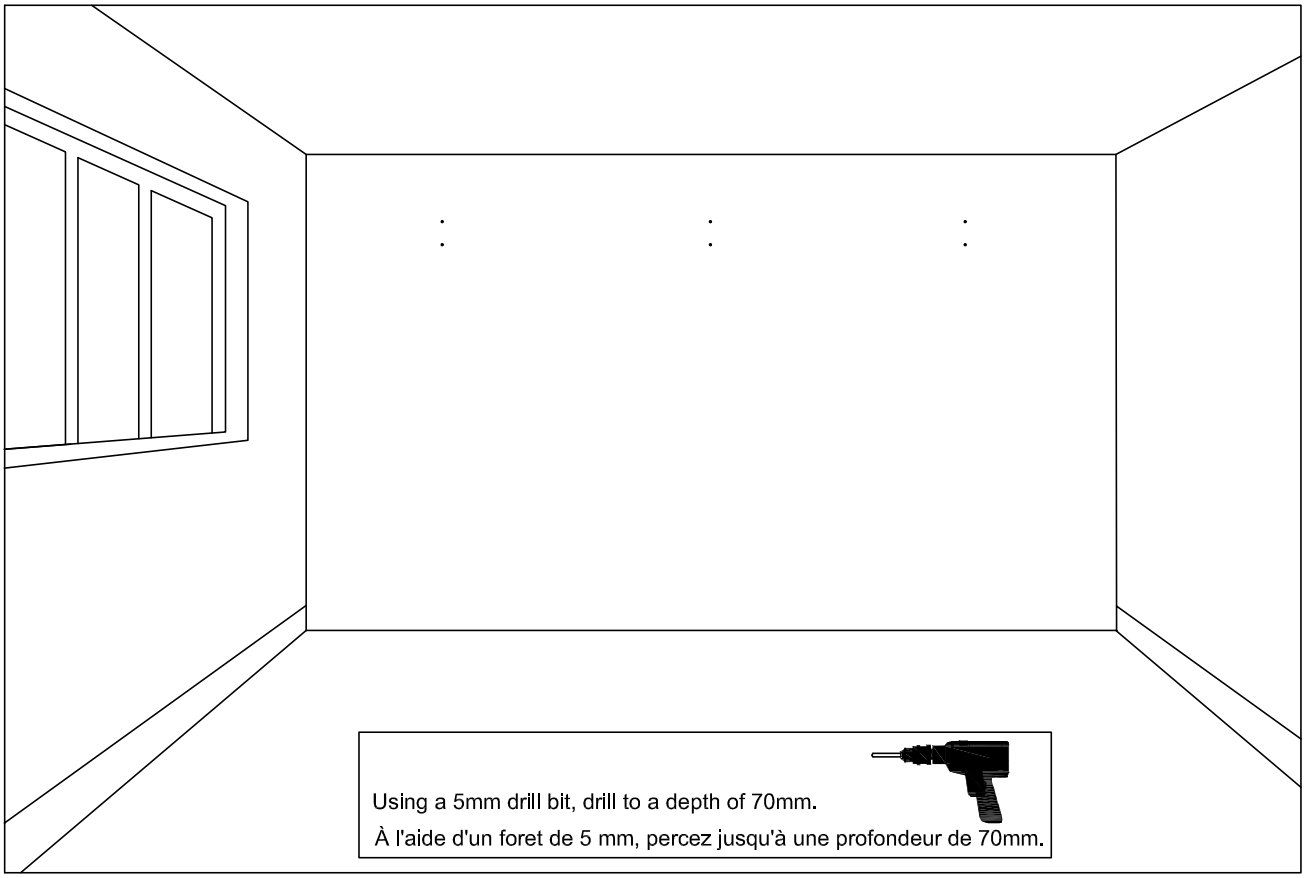

STEP 1:
Étape 1:

OPTION 1:

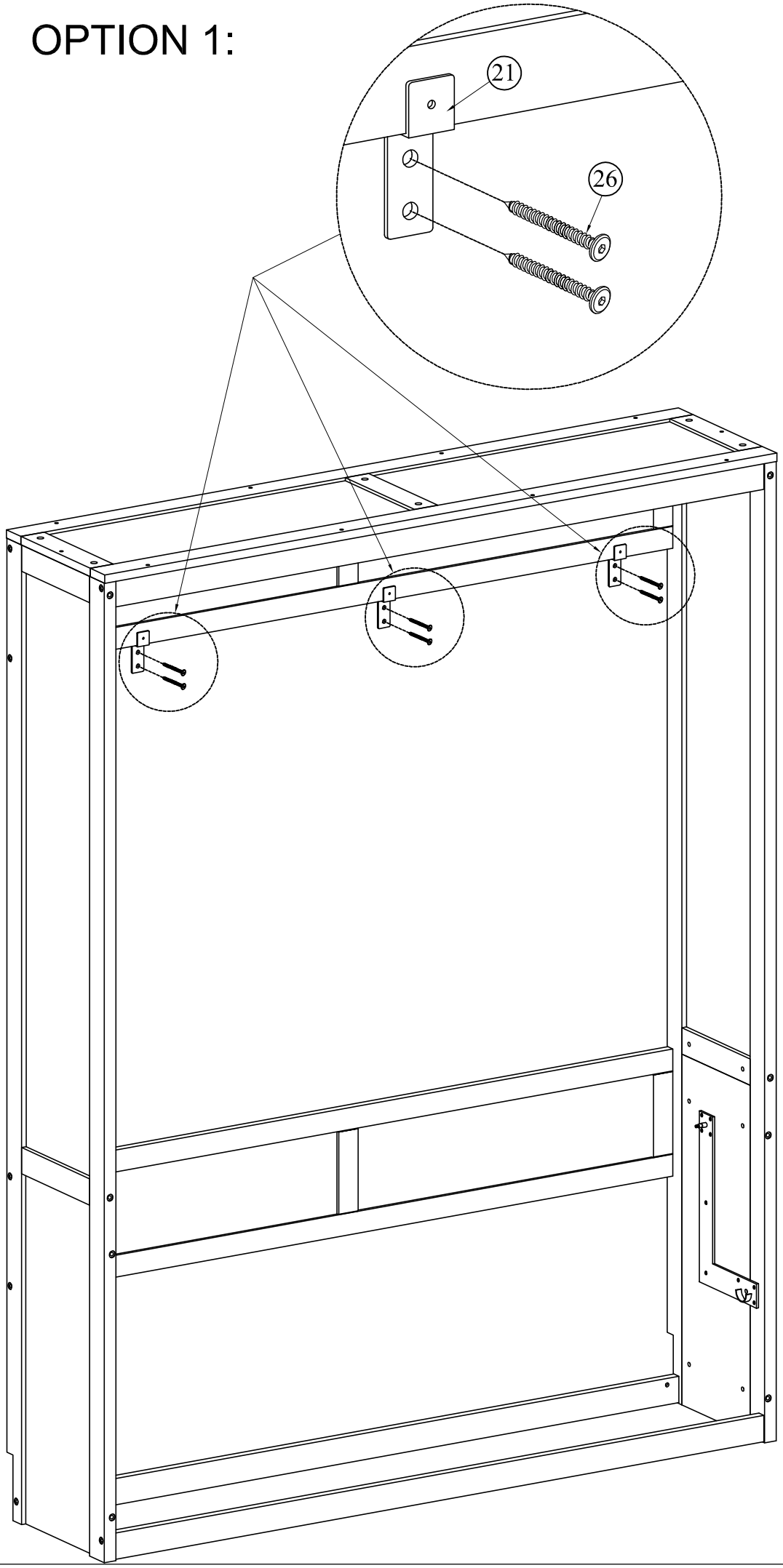

21 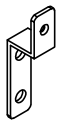	3(pcs)
26 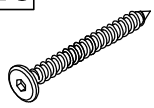	6(pcs)

STEP 2:
Étape 2:

OPTION 1:

16	
	3(pcs)

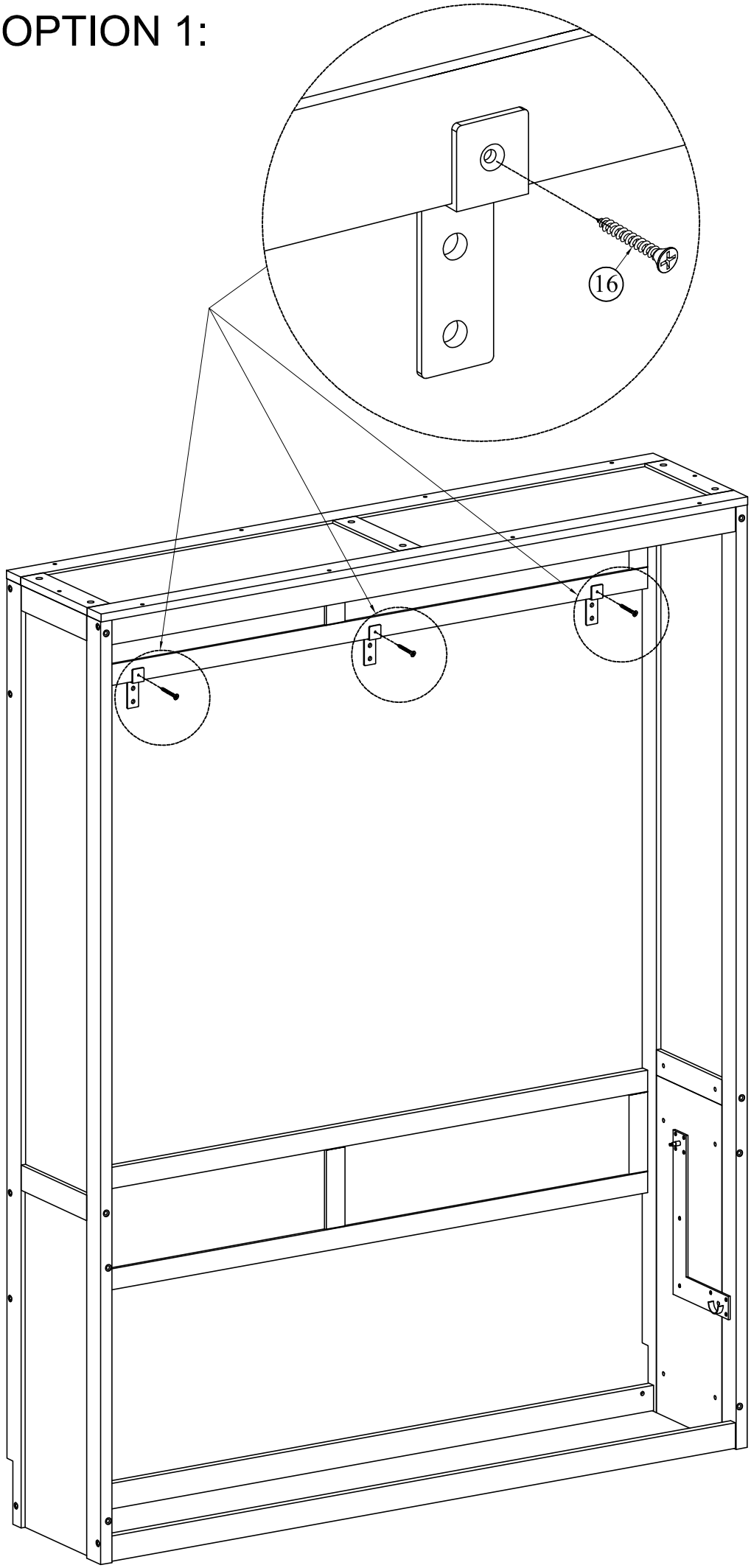

OPTION 2:

Concrete partition walls

Murs de séparation en béton

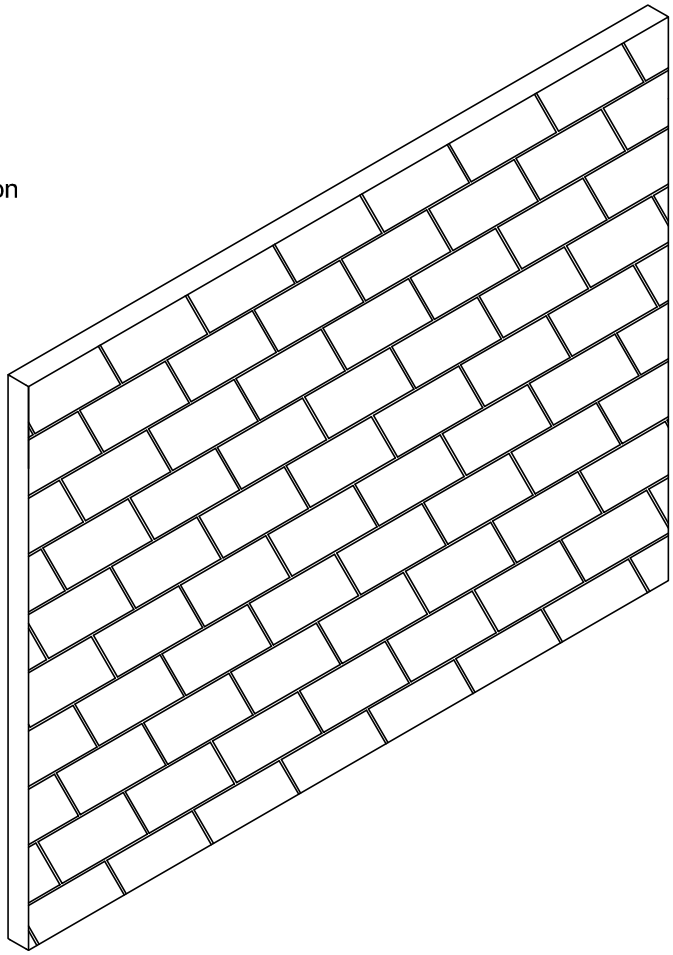

OPTION 2:

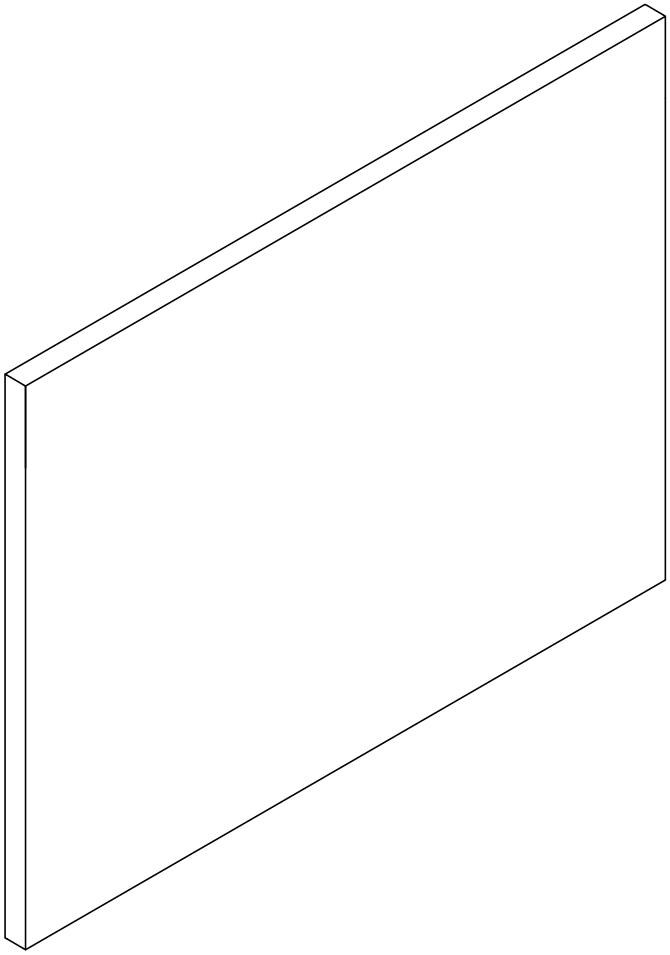

1- Determine the position of the bed in the room.

1- Déterminez la position du lit dans la pièce

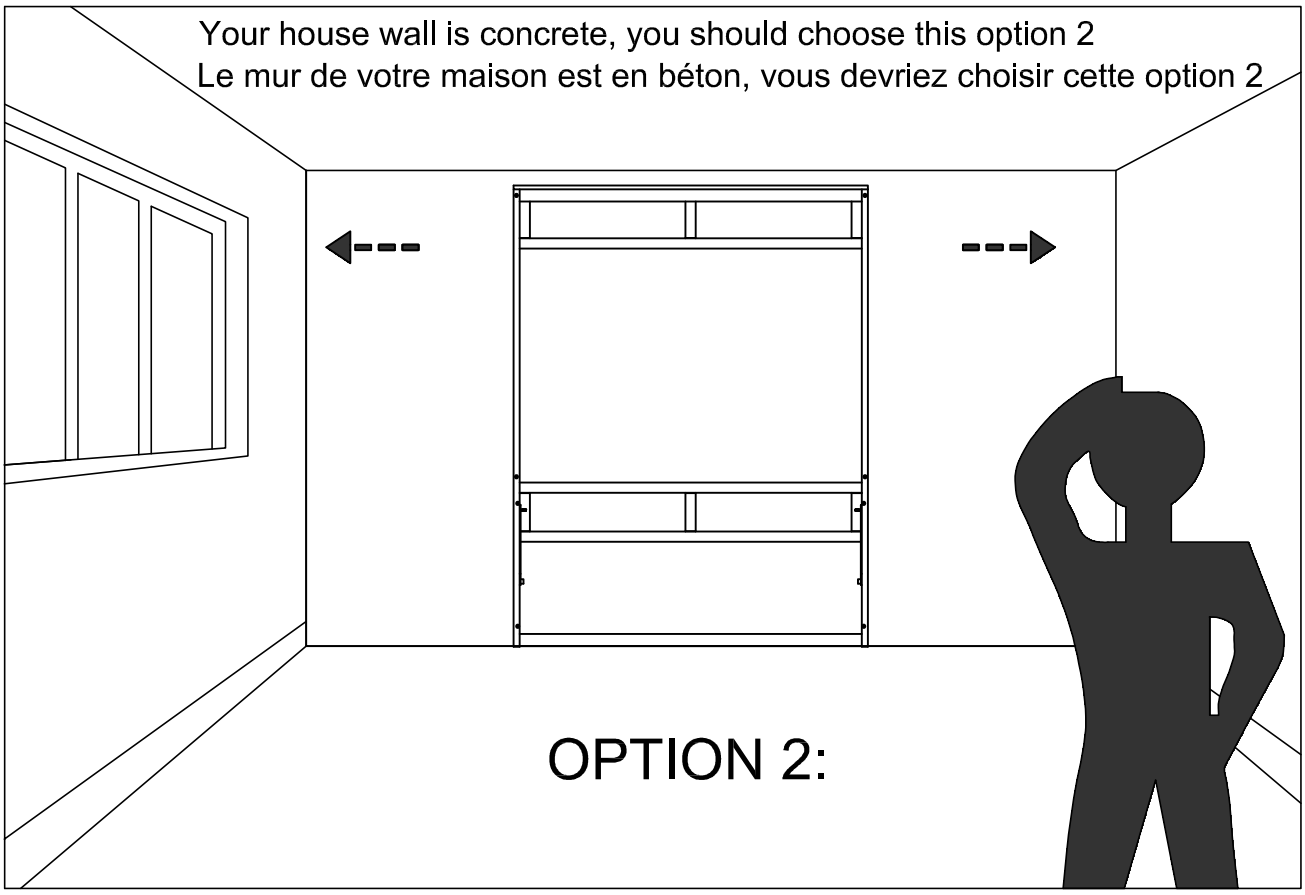

2- Put the bed back in its place. Please keep it vertical and horizontal.

2- Remettez le lit à sa place. Veuillez le garder vertical et horizontal.

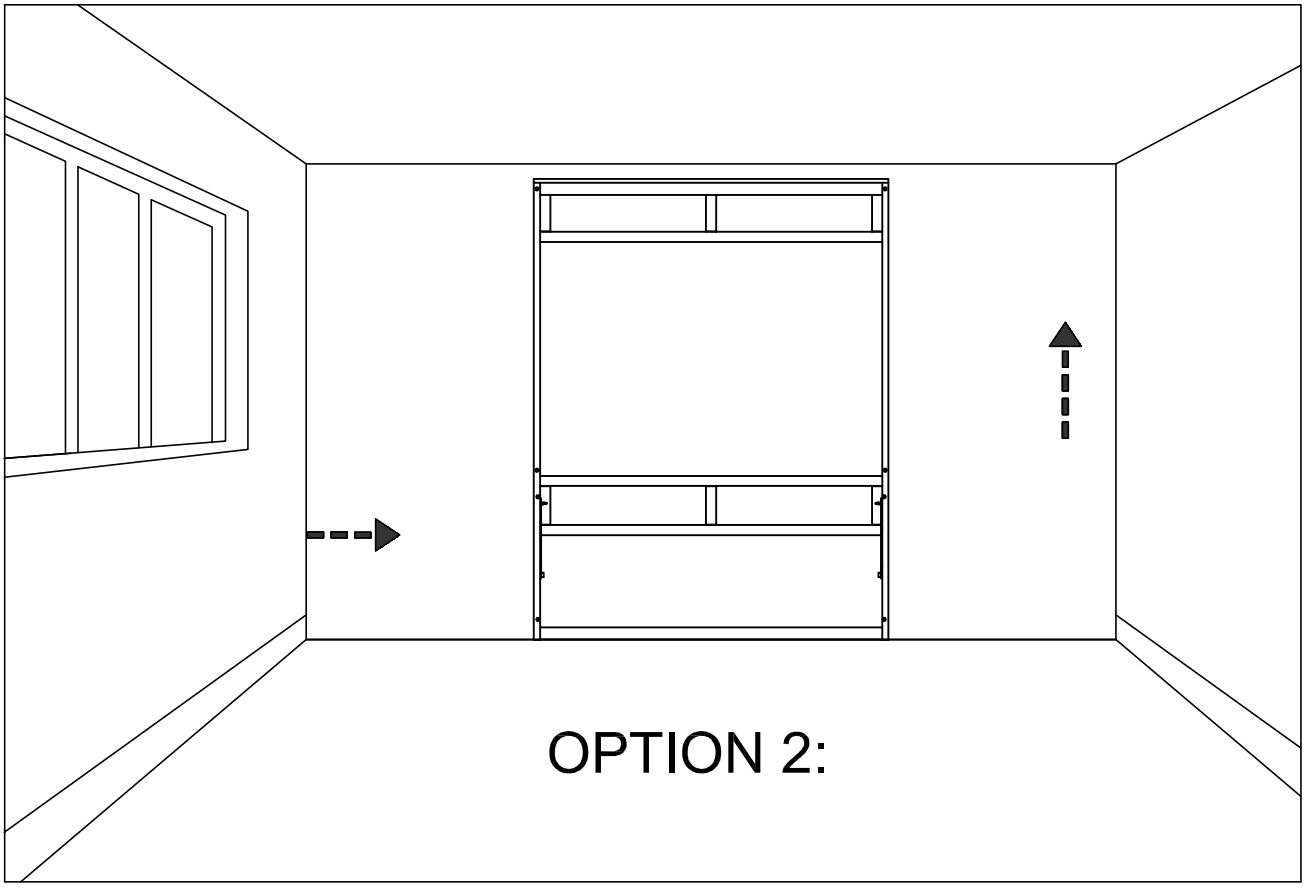

3- Mark the points drill holes according to actual products

3- Marquez les points de perçage en fonction des produits réels.

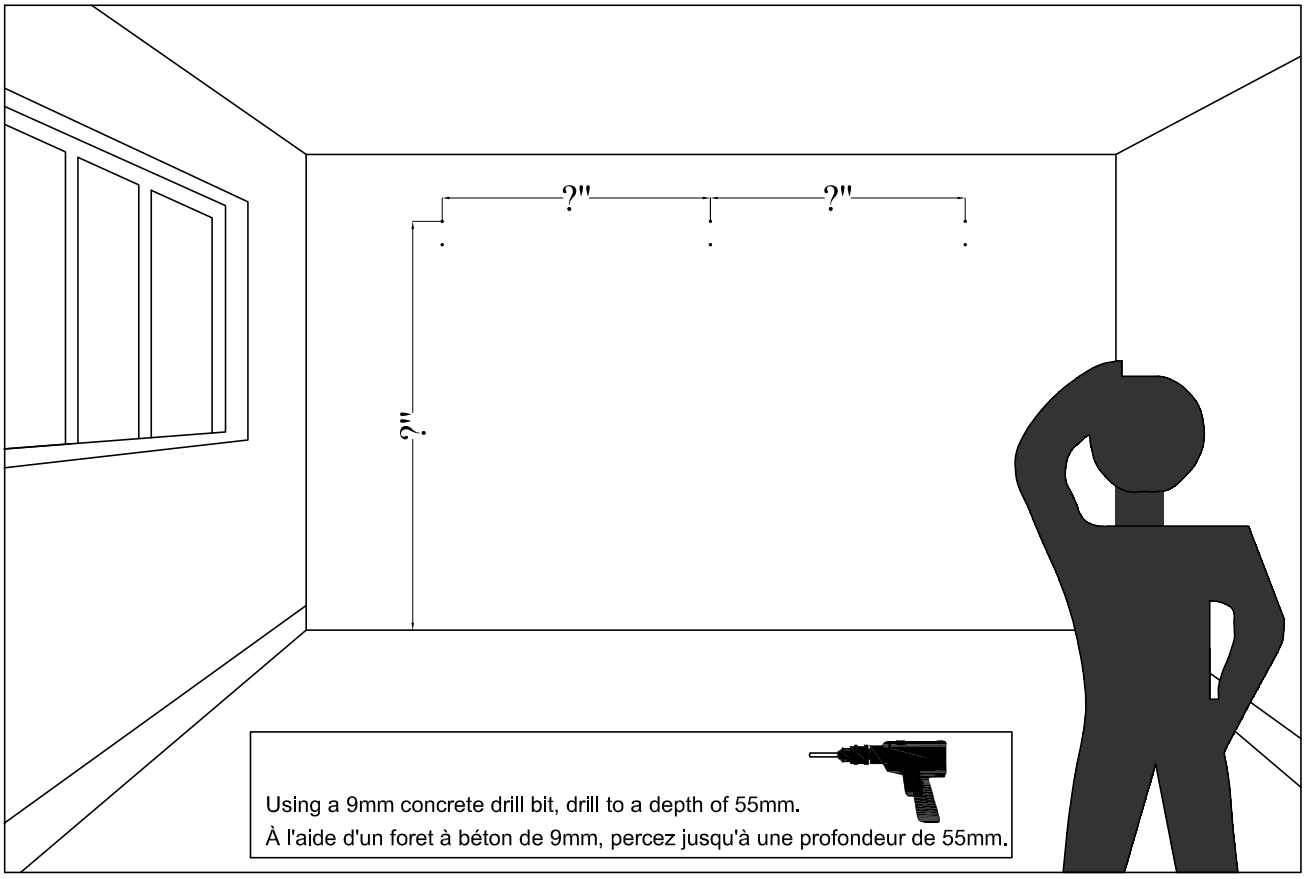

4- Drill the positions marked in STEP 3 and secure the plug.

4- Percez les positions marquées à l'ÉTAPE 3 et fixez la cheville.

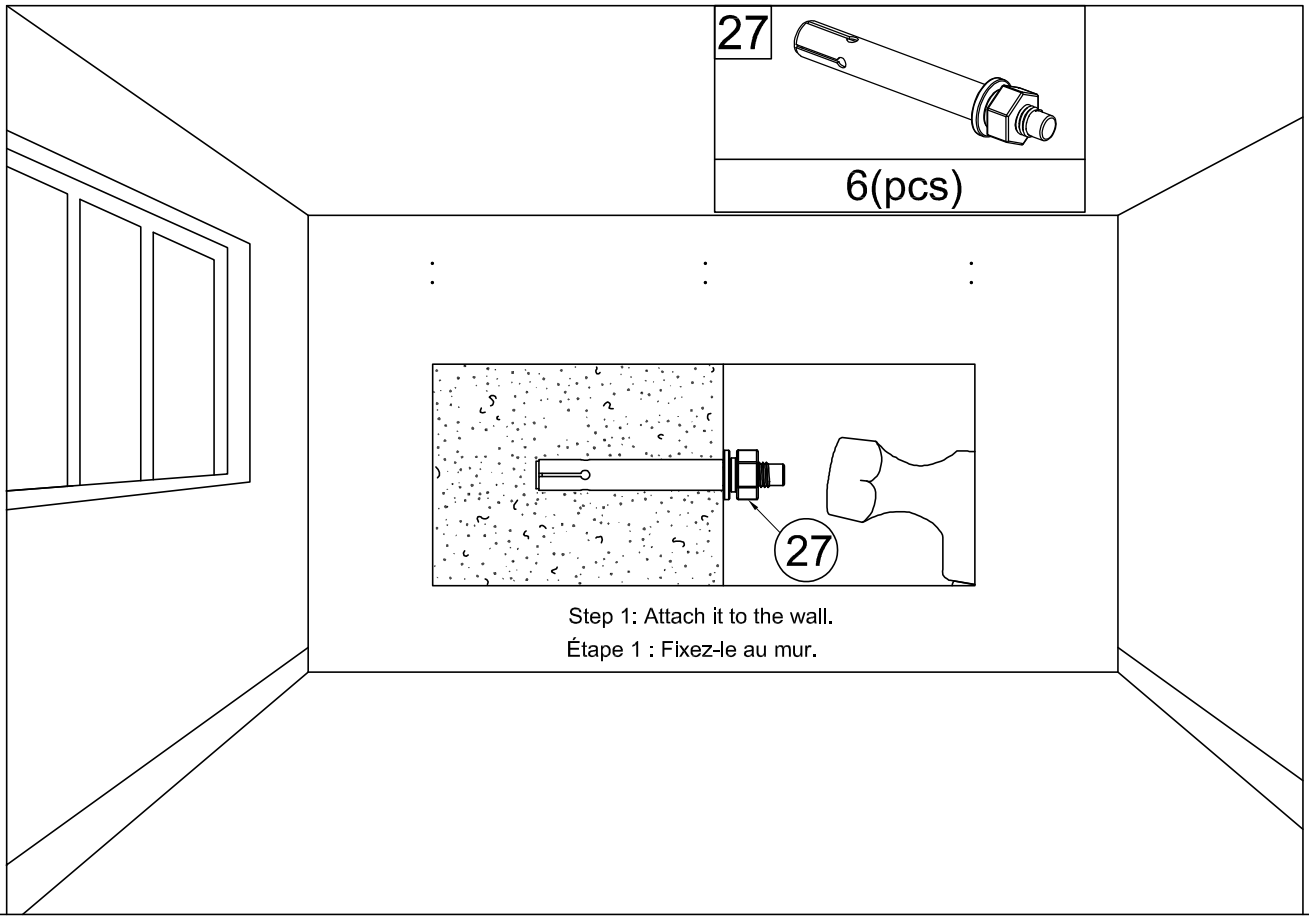

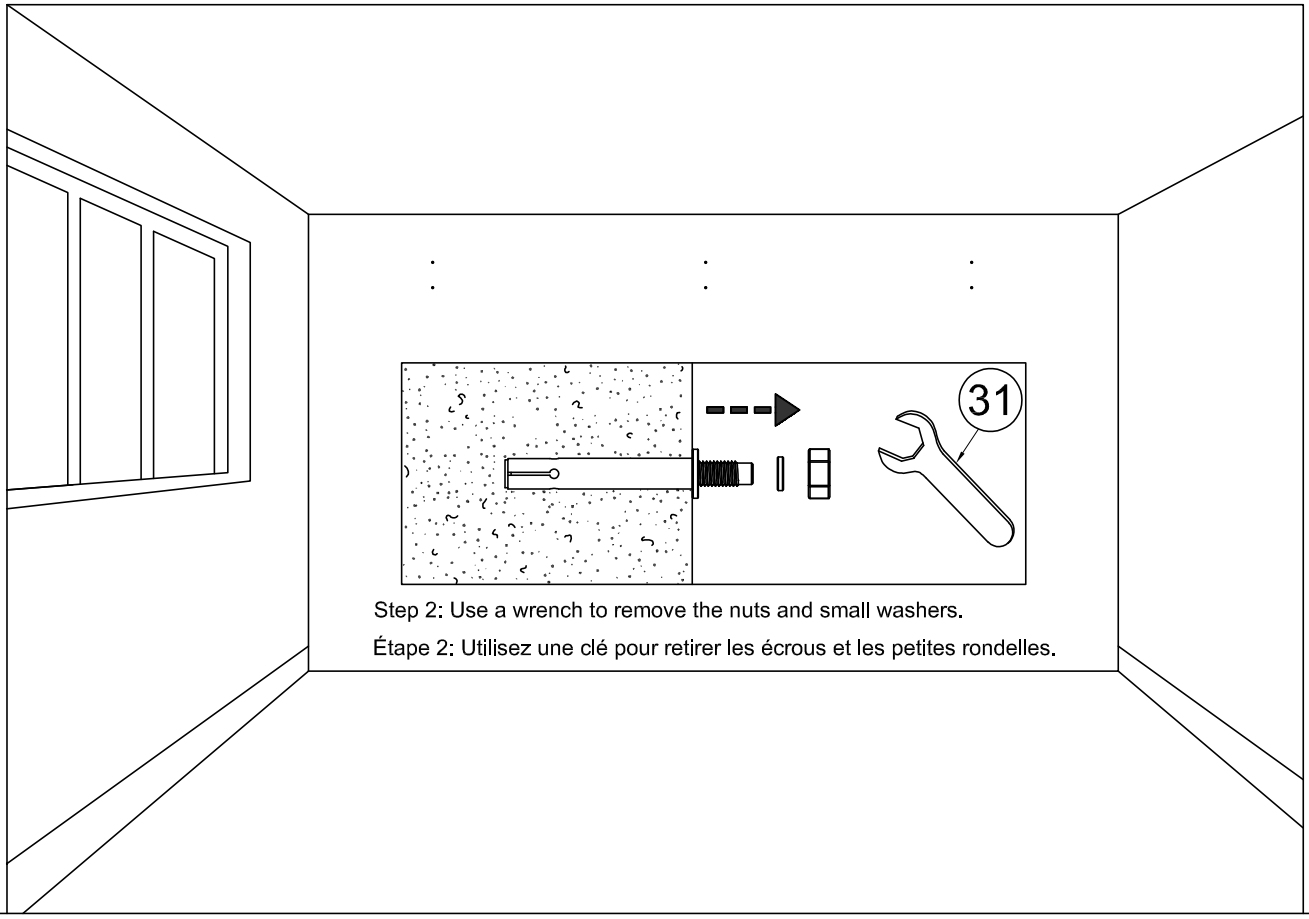

Step 2: Use a wrench to remove the nuts and small washers.

Étape 2: Utilisez une clé pour retirer les écrous et les petites rondelles.

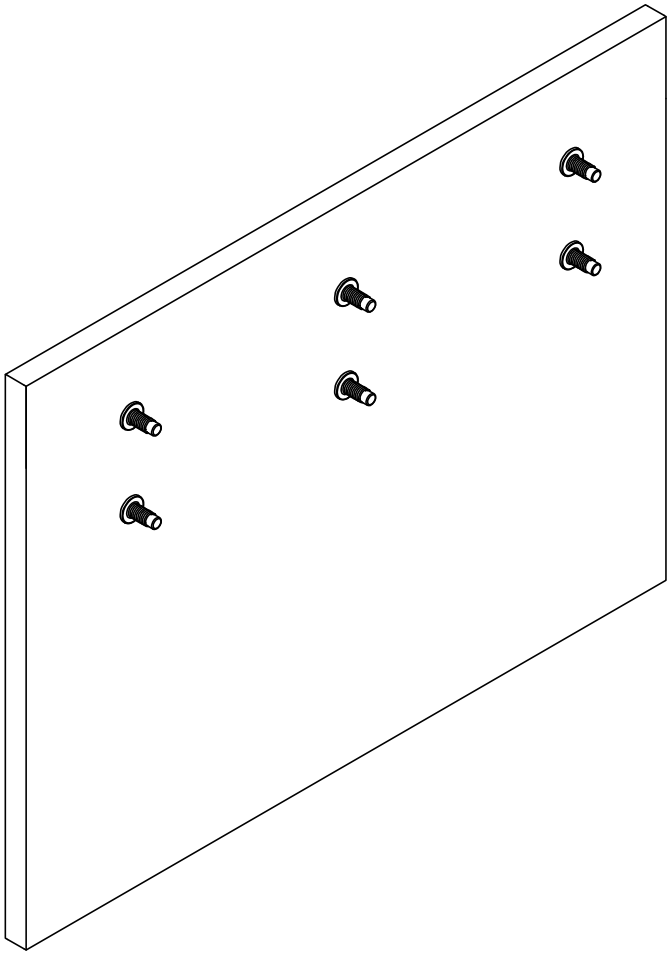

STEP 1:
Étape 1:

OPTION 2:

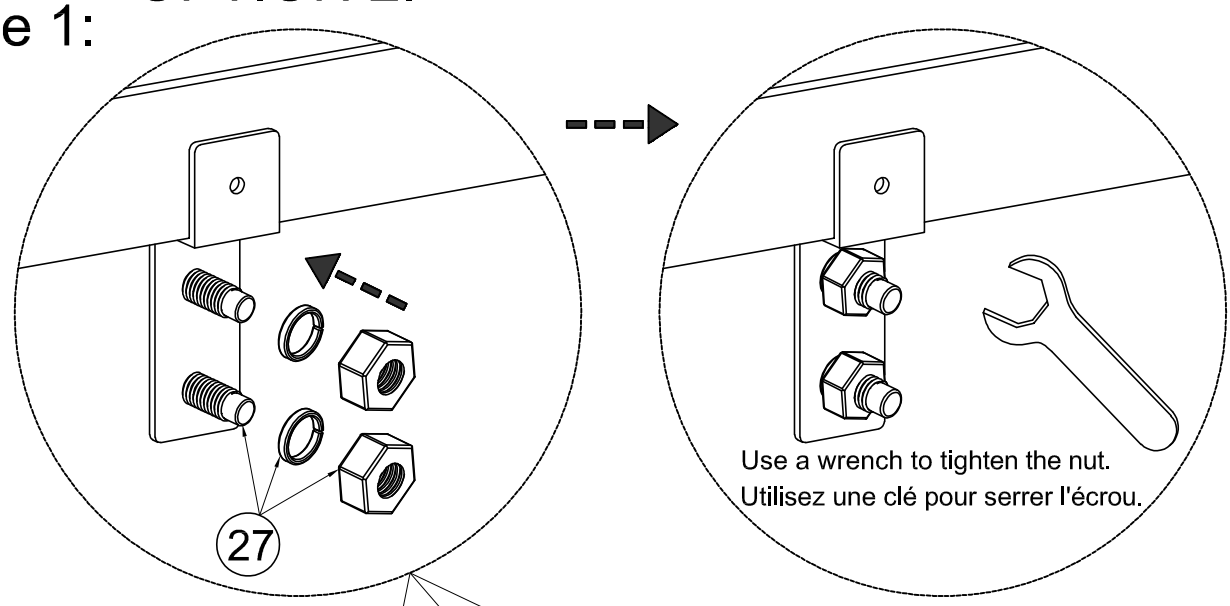

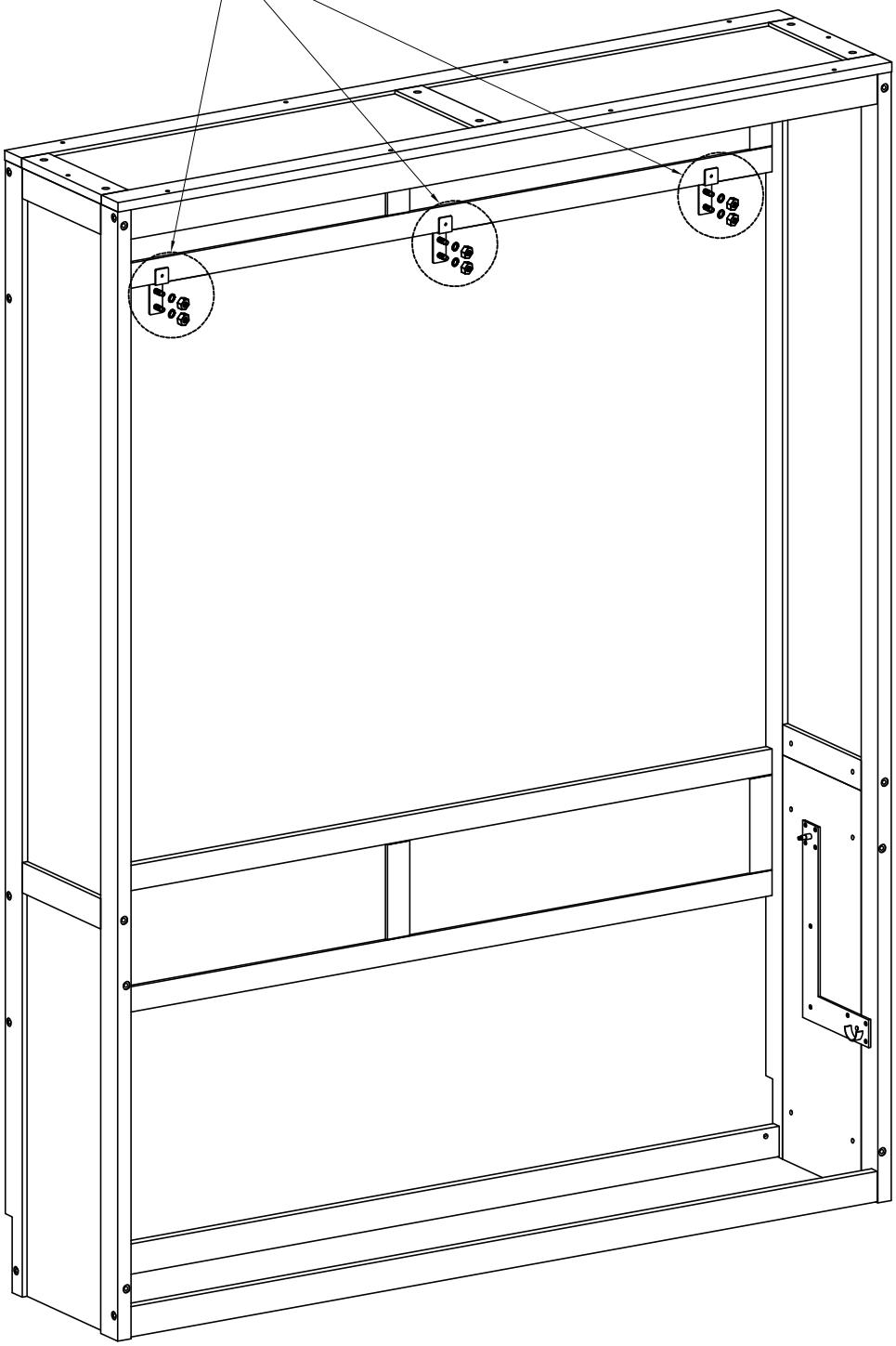

STEP 2:
Étape 2:

OPTION 2:

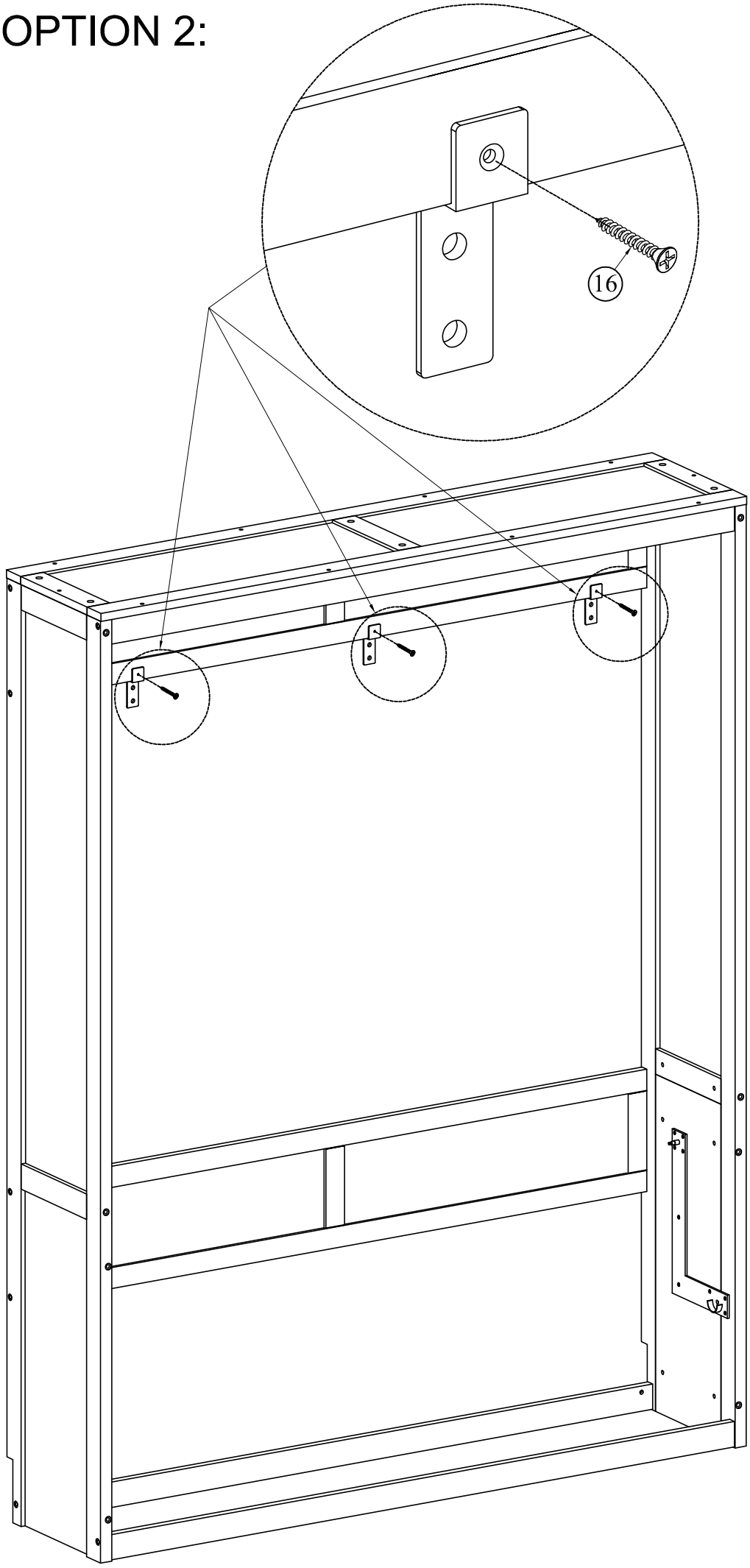

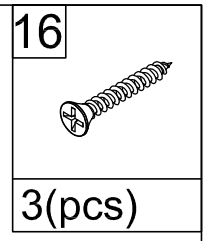

STEP 8:

Étape 8:

8
4(pcs)

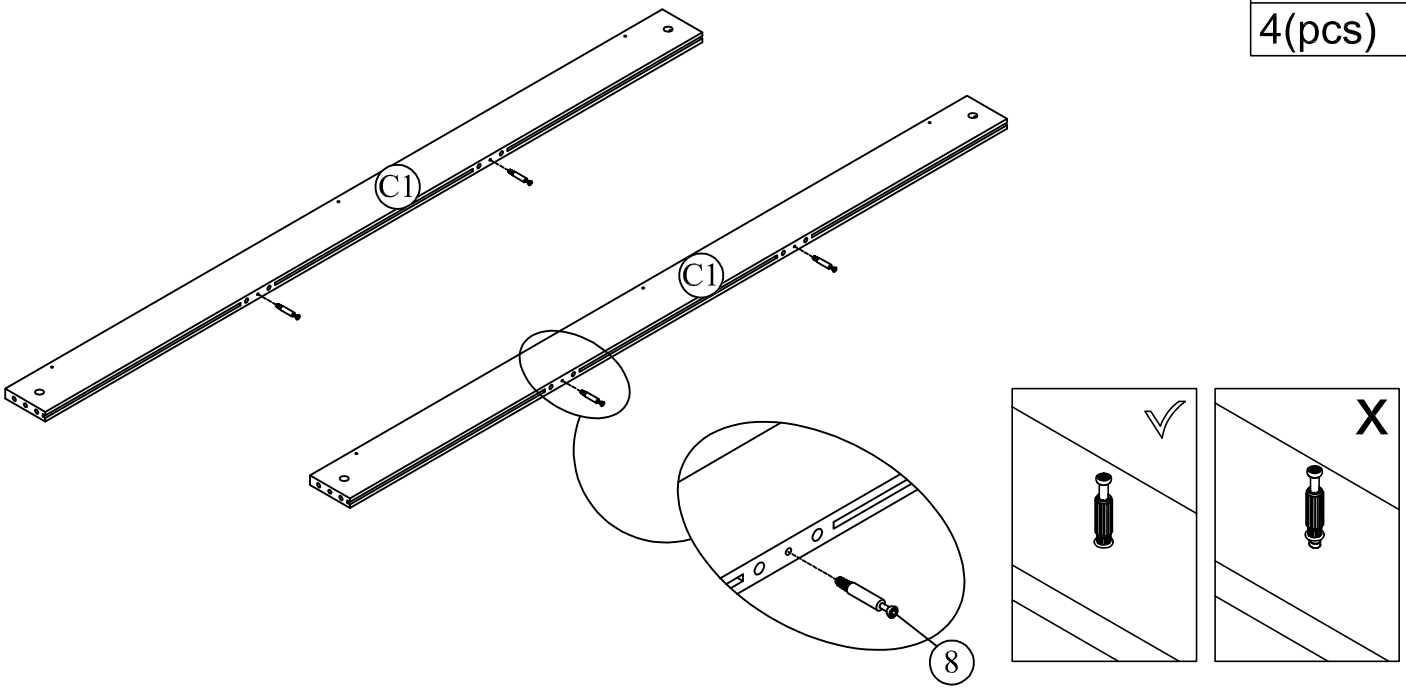

STEP 9:

Étape 9:

9	6
4(pcs)	8(pcs)

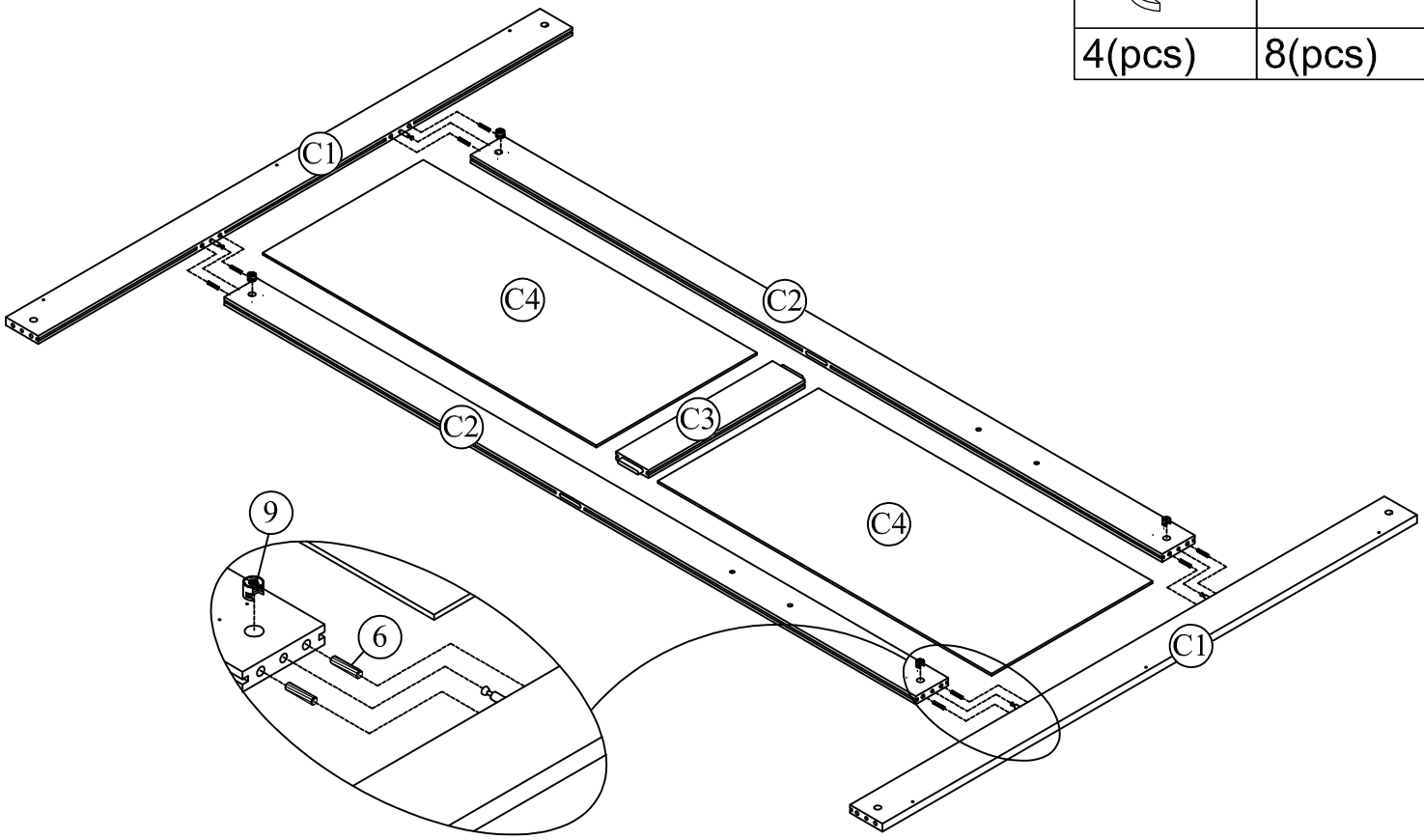

STEP 10:
Étape 10:

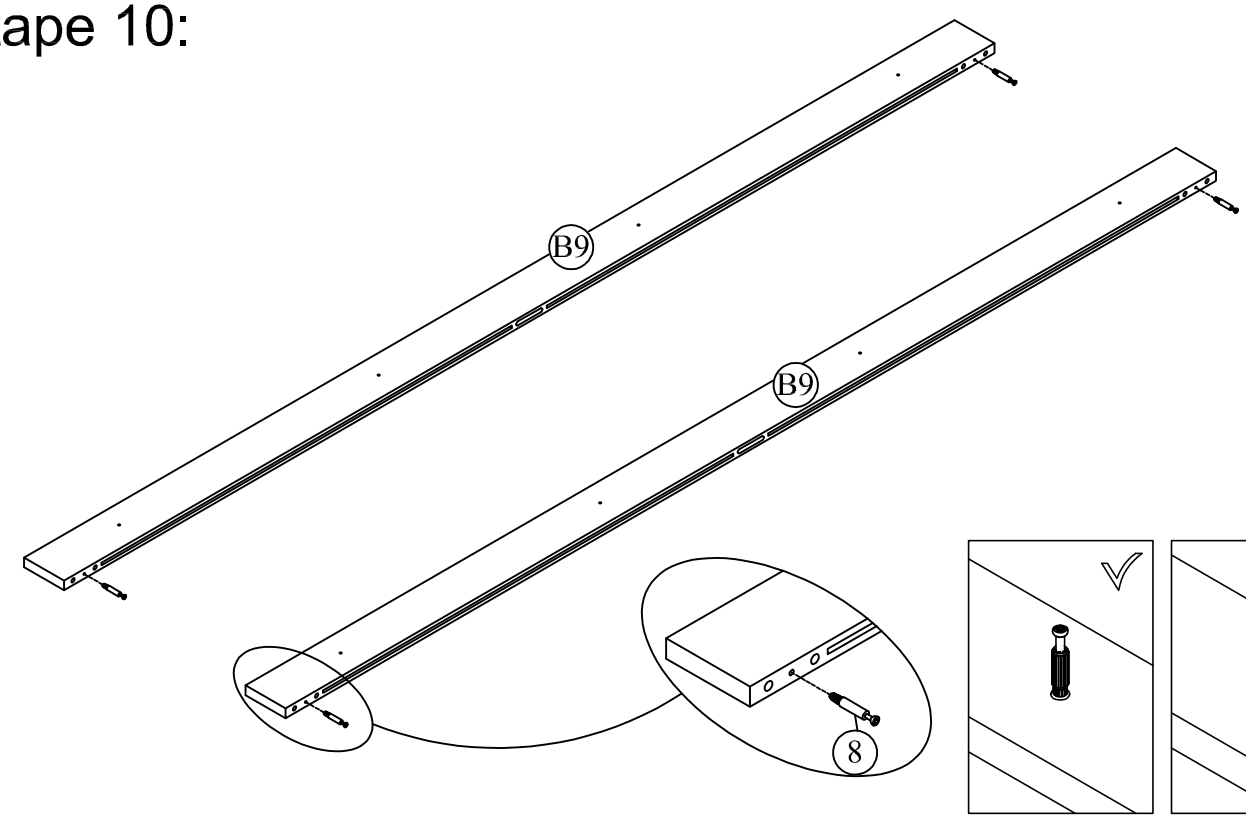

STEP 11:
Étape 11:

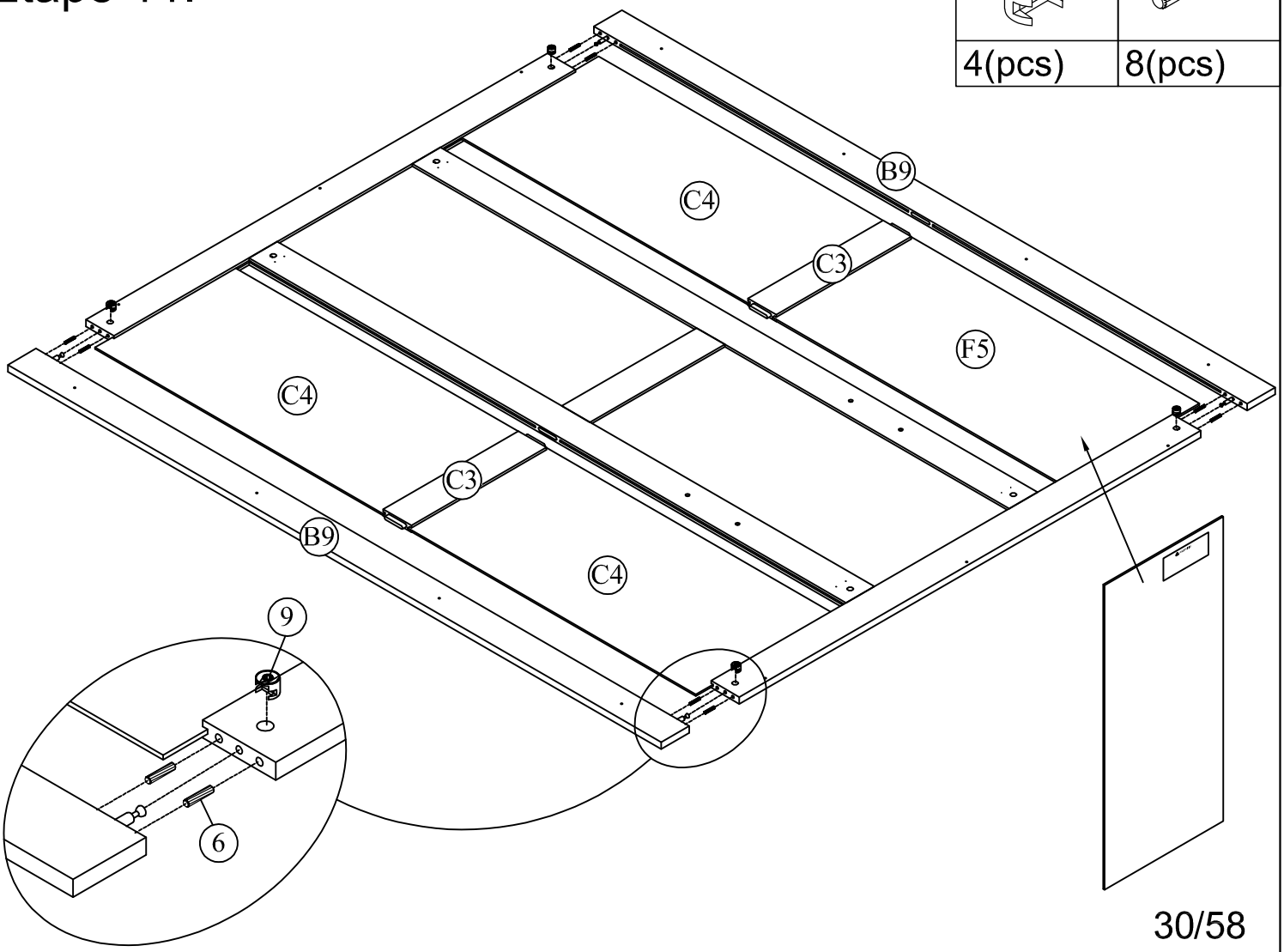

STEP 12:
Étape 12:

8
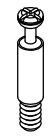
14(pcs)

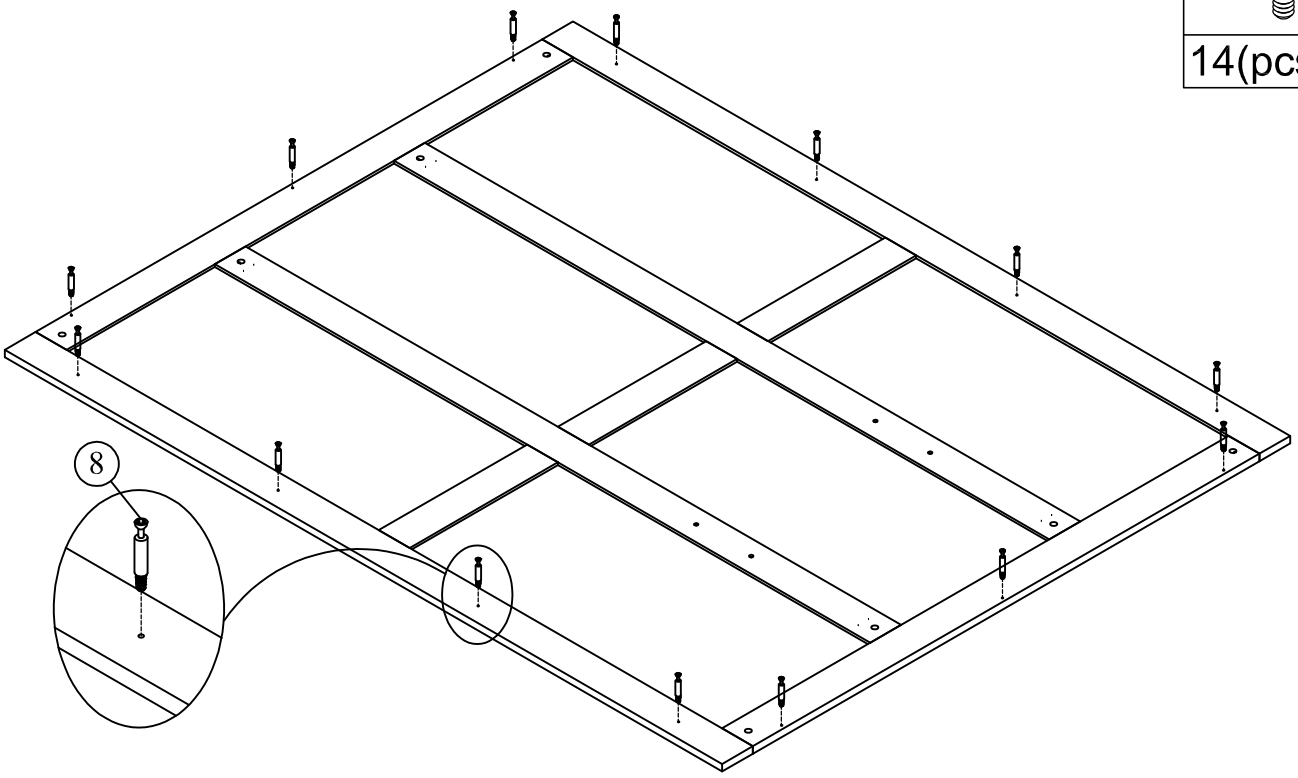

STEP 13:
Étape 13:

7	6	3
4(pcs)	8(pcs)	4(pcs)

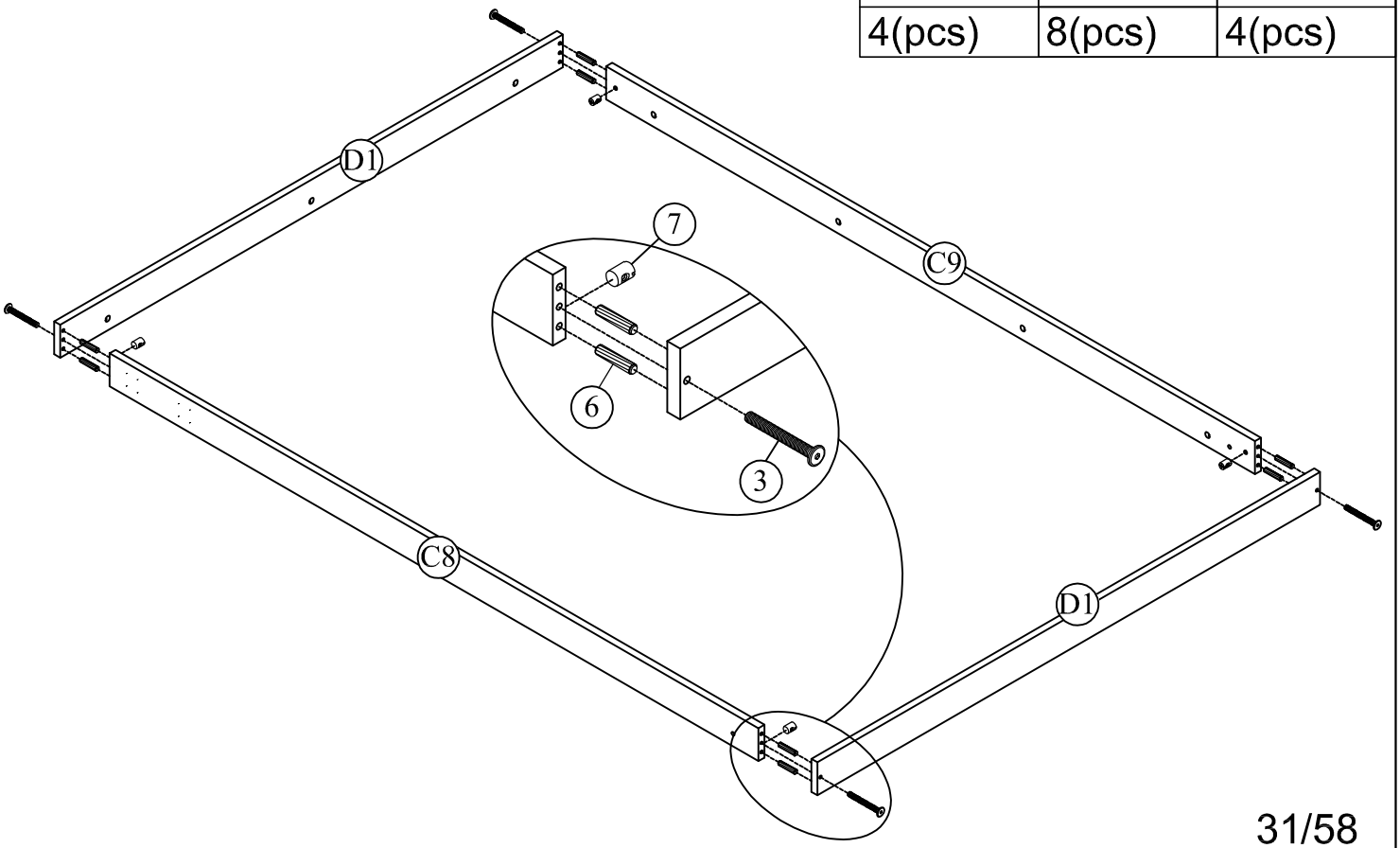

STEP 14:
Étape 14:

9
14(pcs)

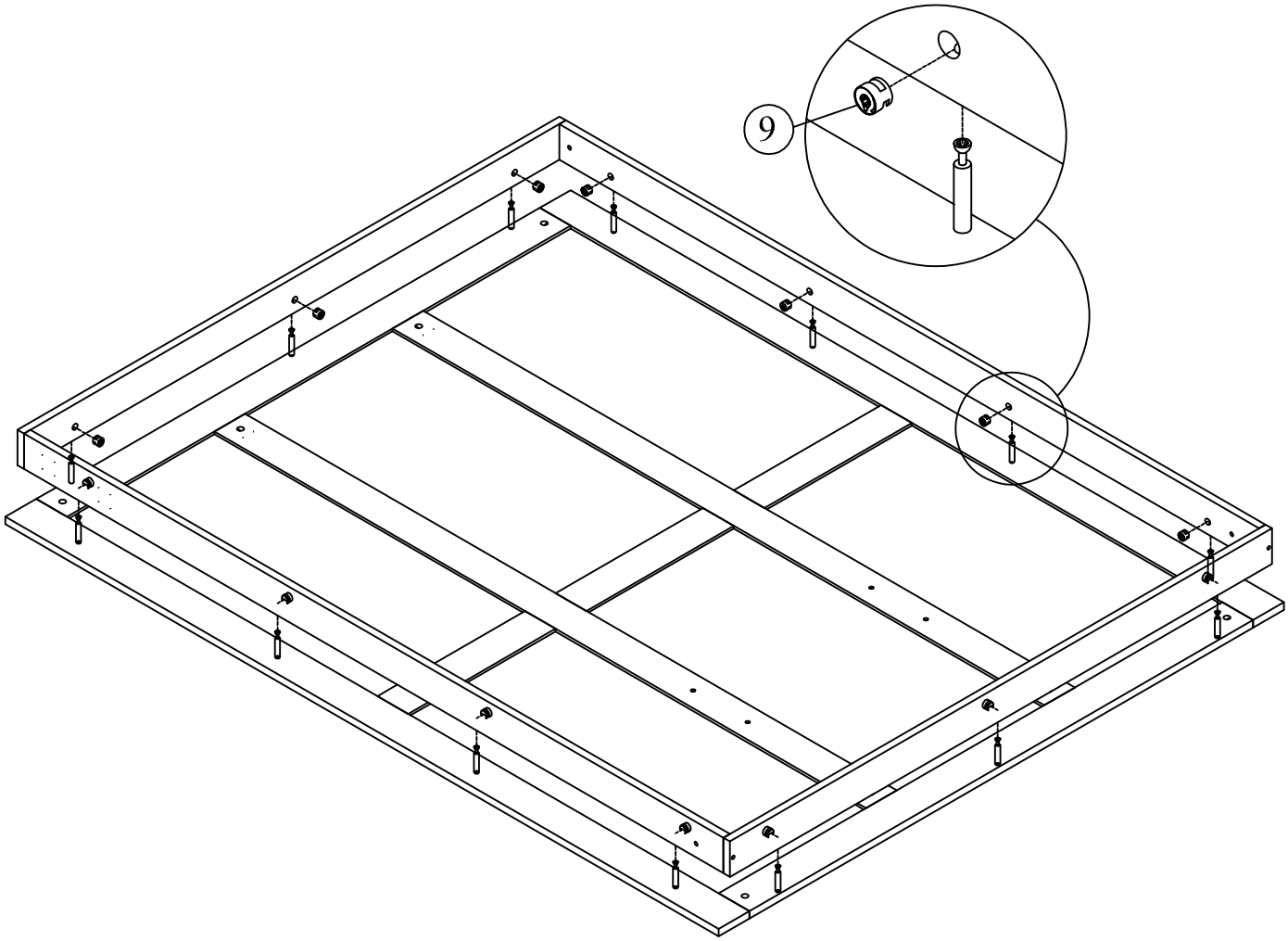

STEP 15:
Étape 15:

30	17
21(pcs)	24(pcs)

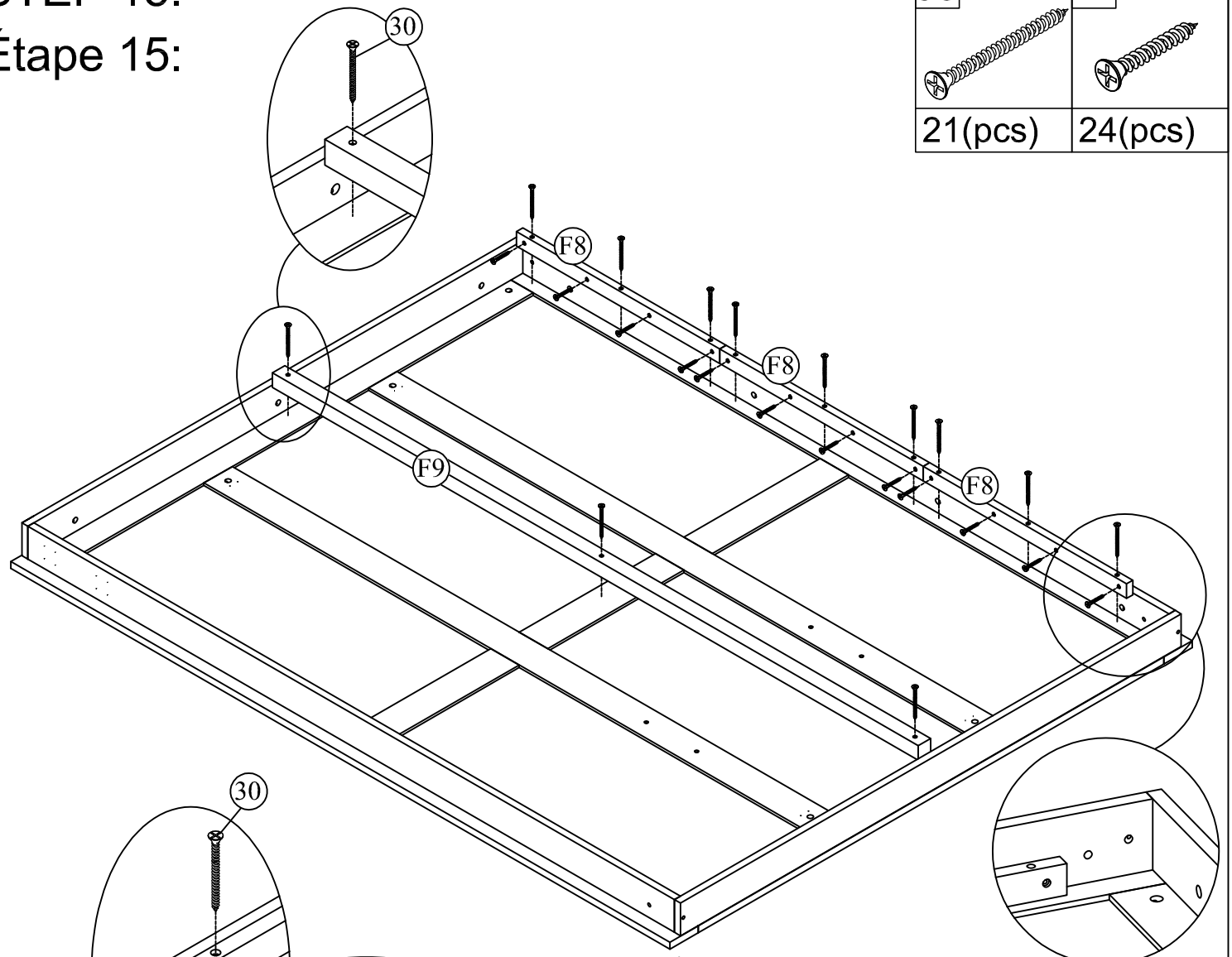

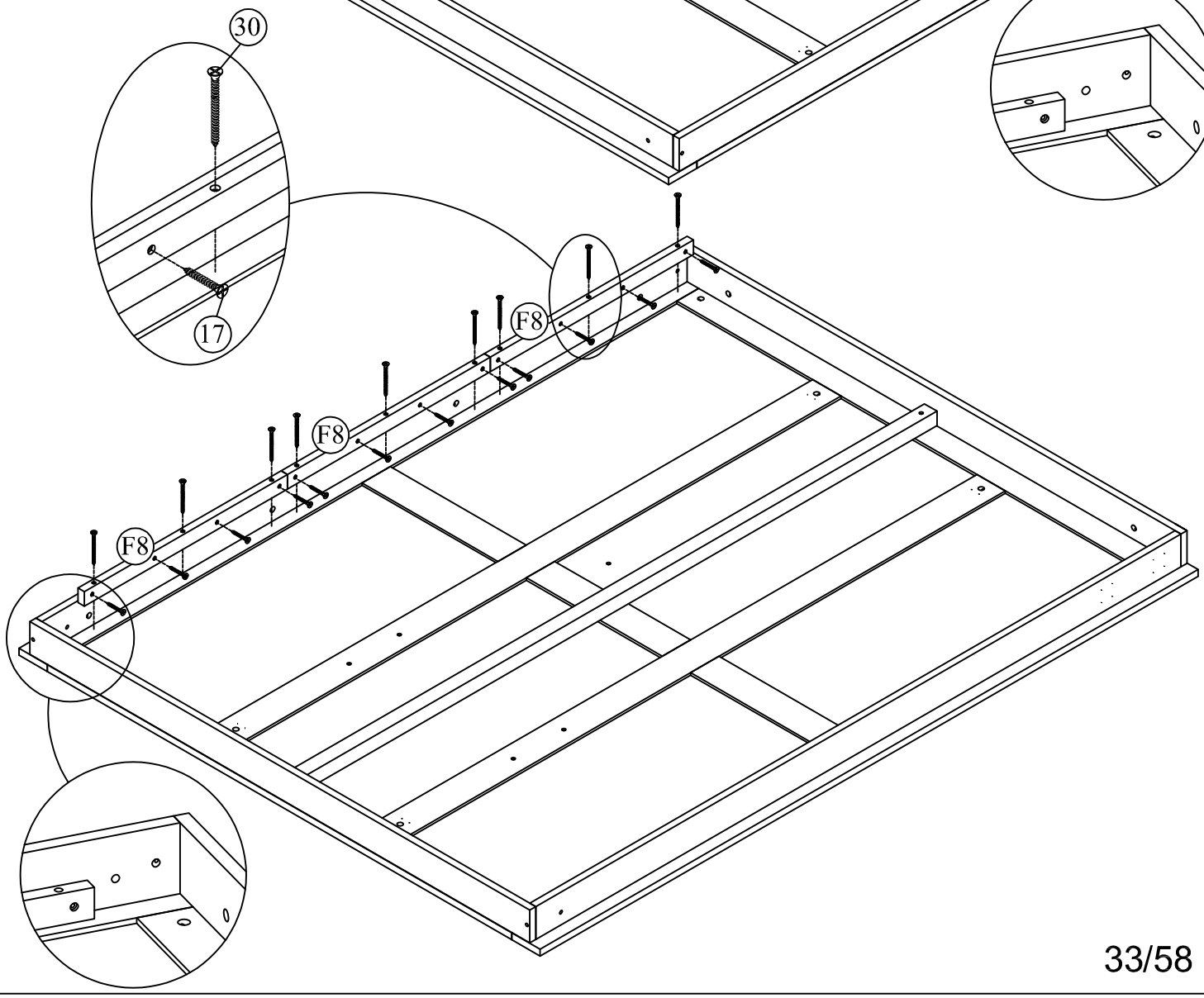

STEP 16:
Étape 16:

20	19
	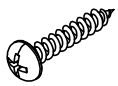
8(pcs)	48(pcs)

25
4(pcs)

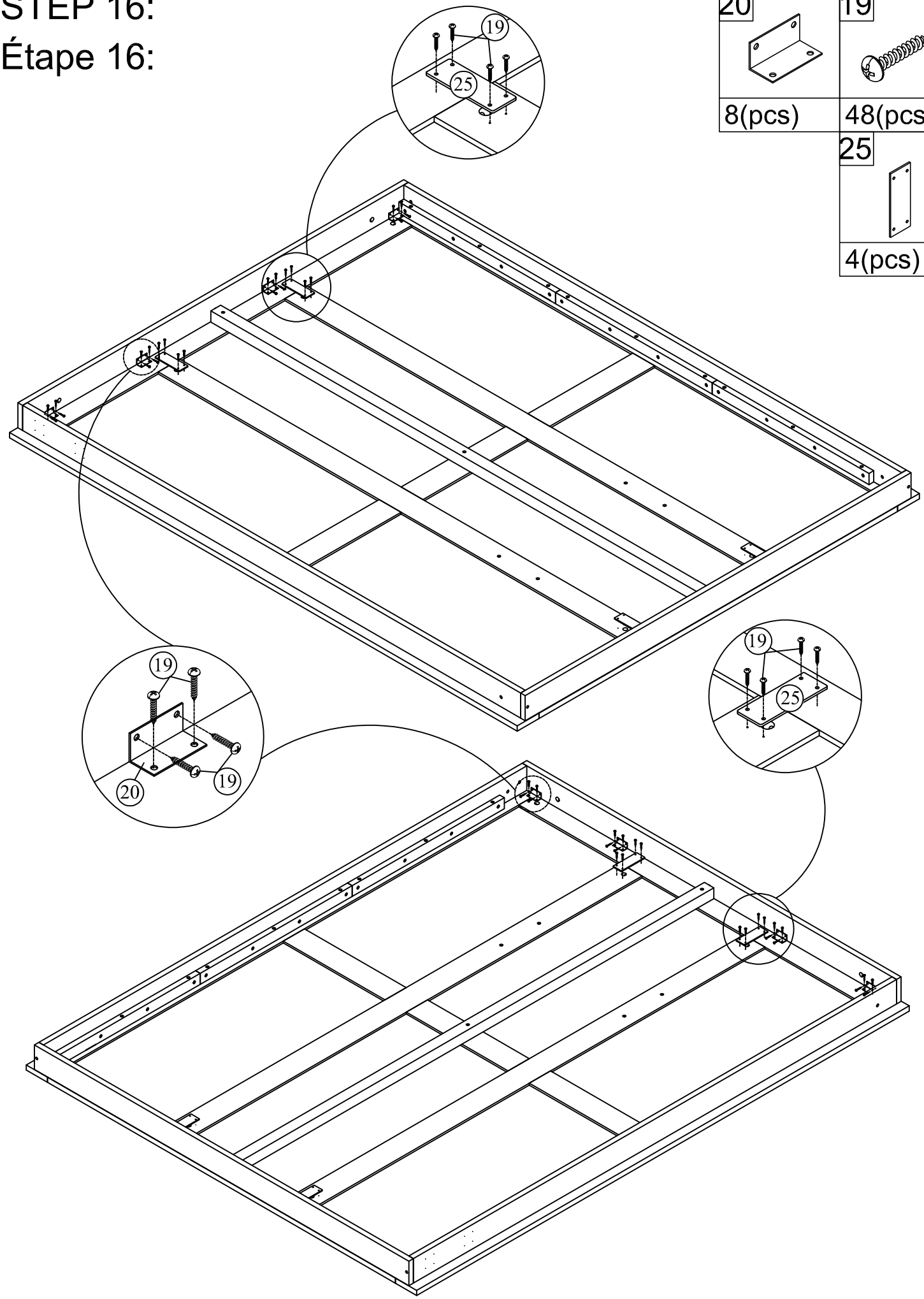

STEP 17:
Étape 17:

17
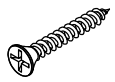
21(pcs)

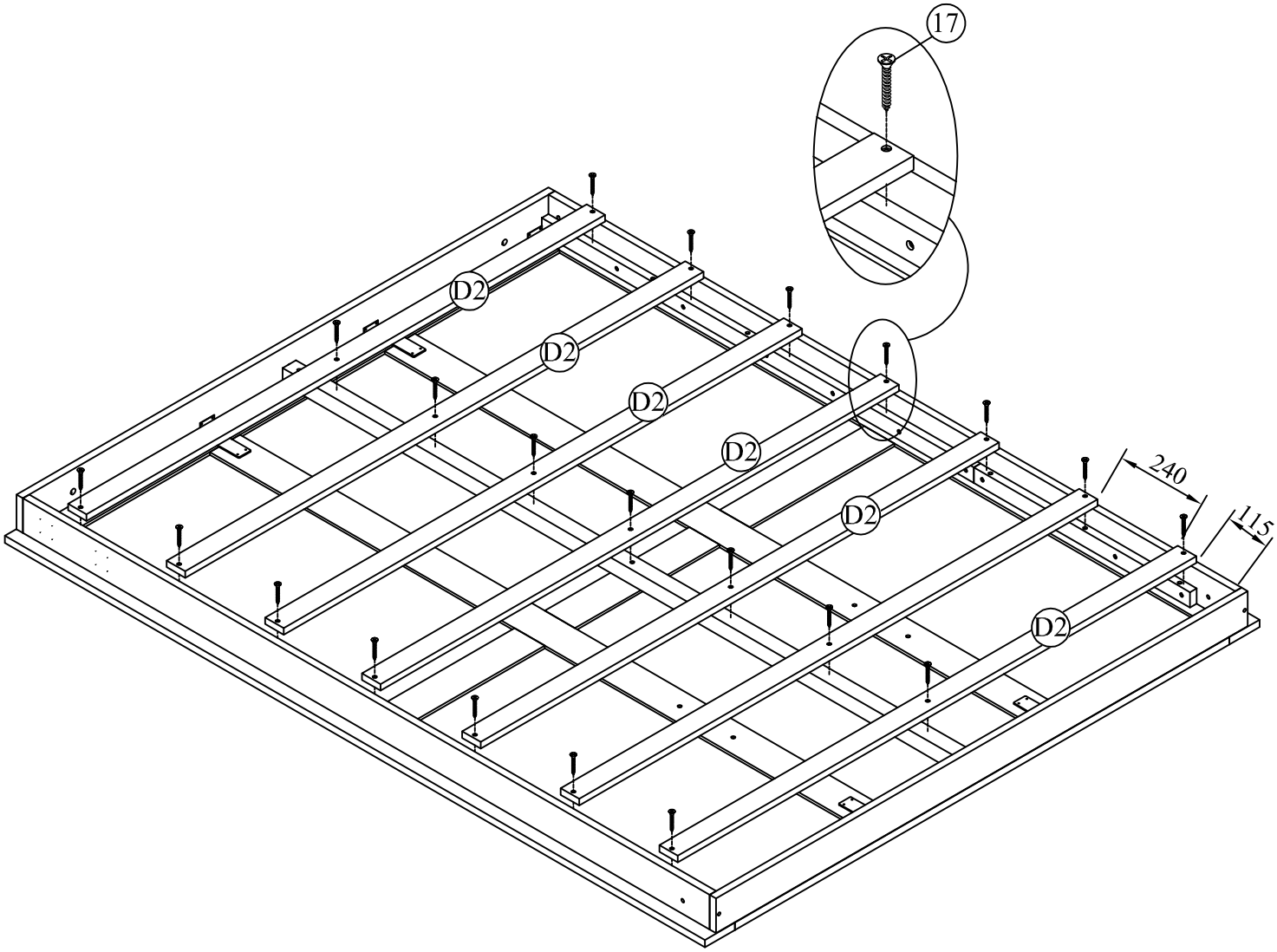

STEP 18:

Étape 18:

16
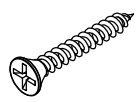
16(pcs)

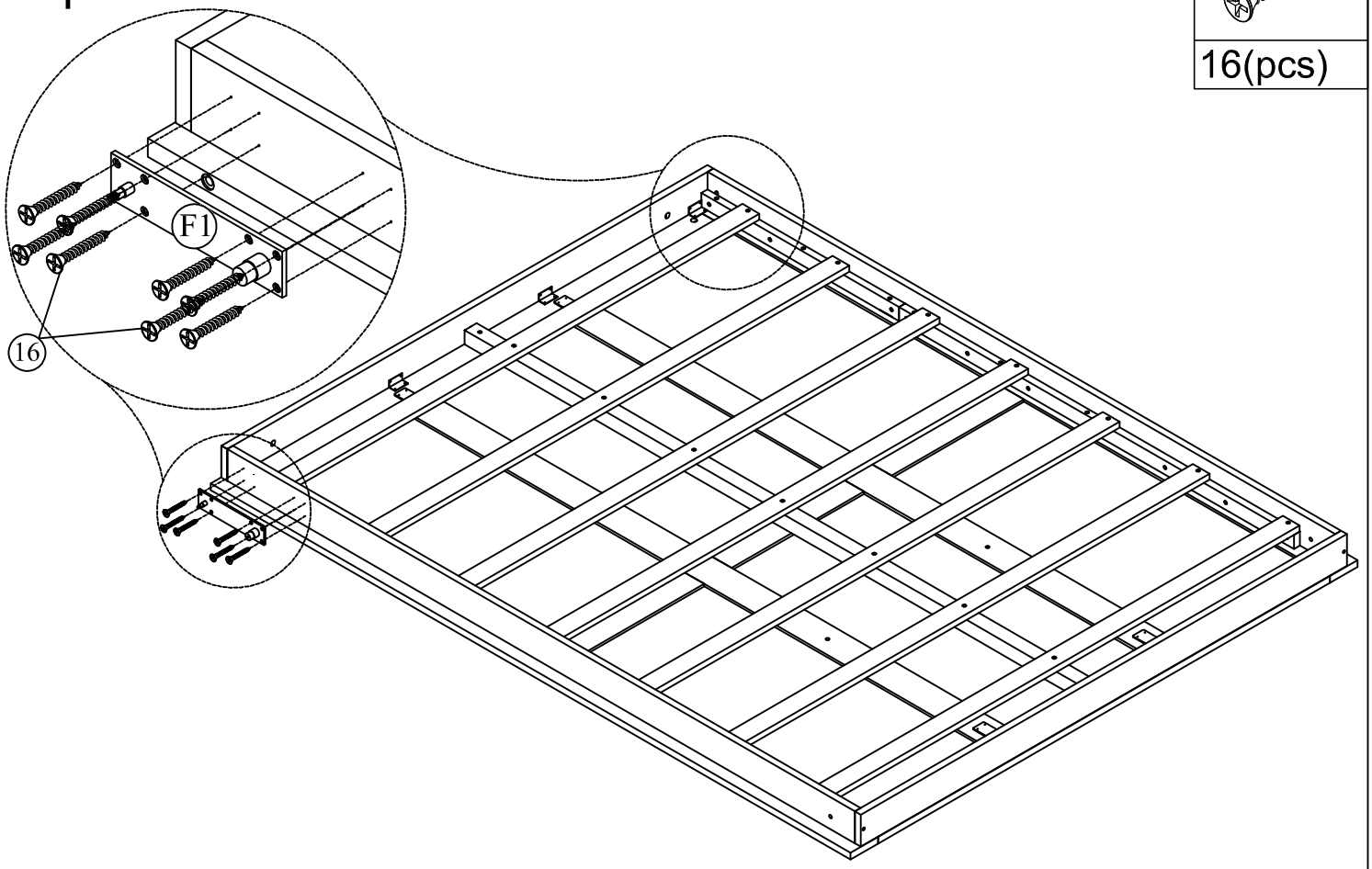

STEP 19:

Étape 19:

Before assembling, we need to remove the plastic ties.

Avant le montage, il faut d'abord retirer les attaches en plastique.

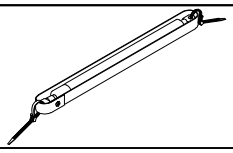

Press the lock and pull the cord out.

Appuyez sur le verrou et tirez sur le cordon.

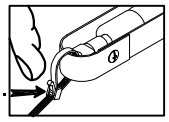

14	12
2(pcs)	2(pcs)

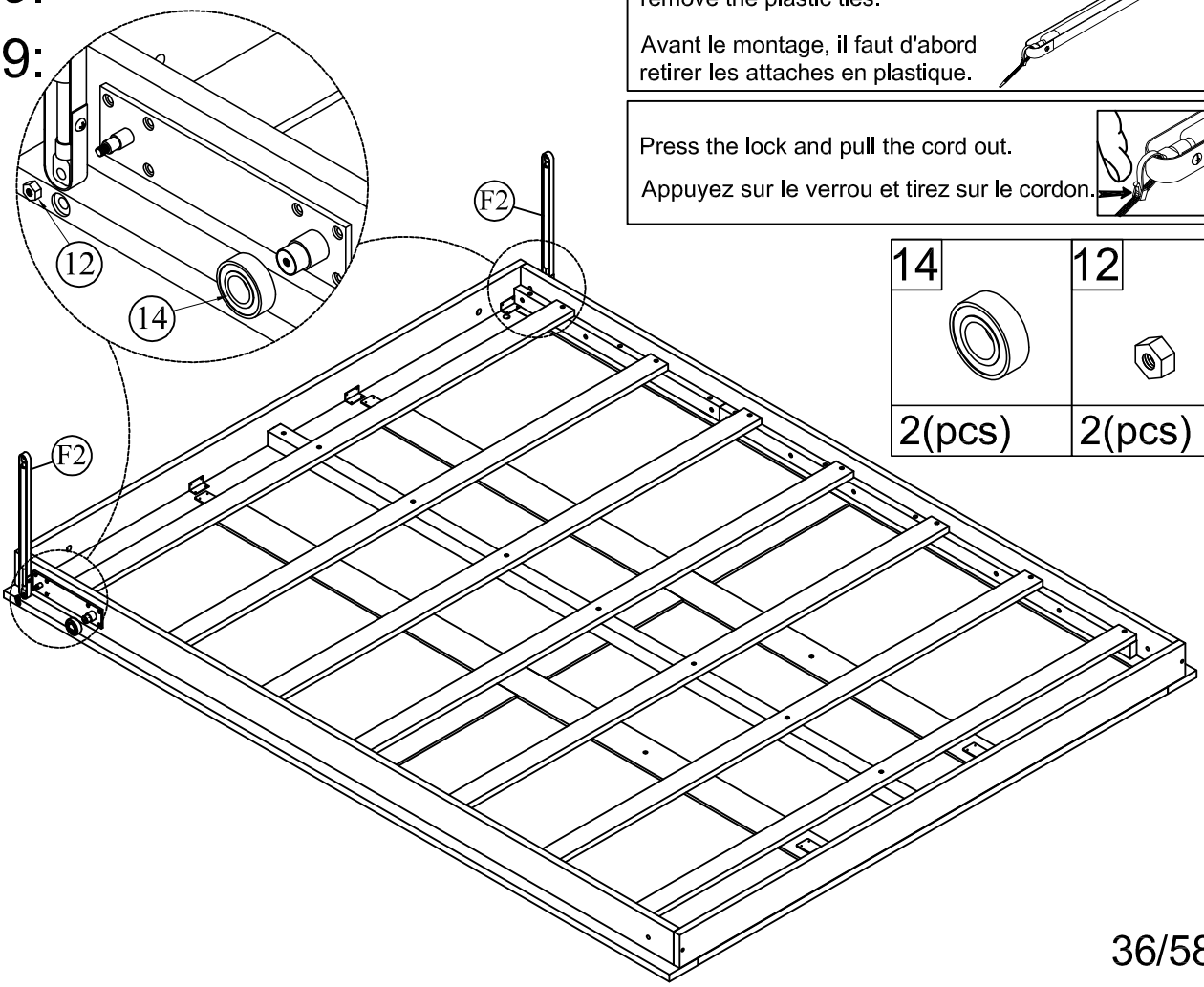

STEP 20:
Étape 20:

11
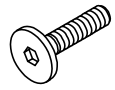
2(pcs)

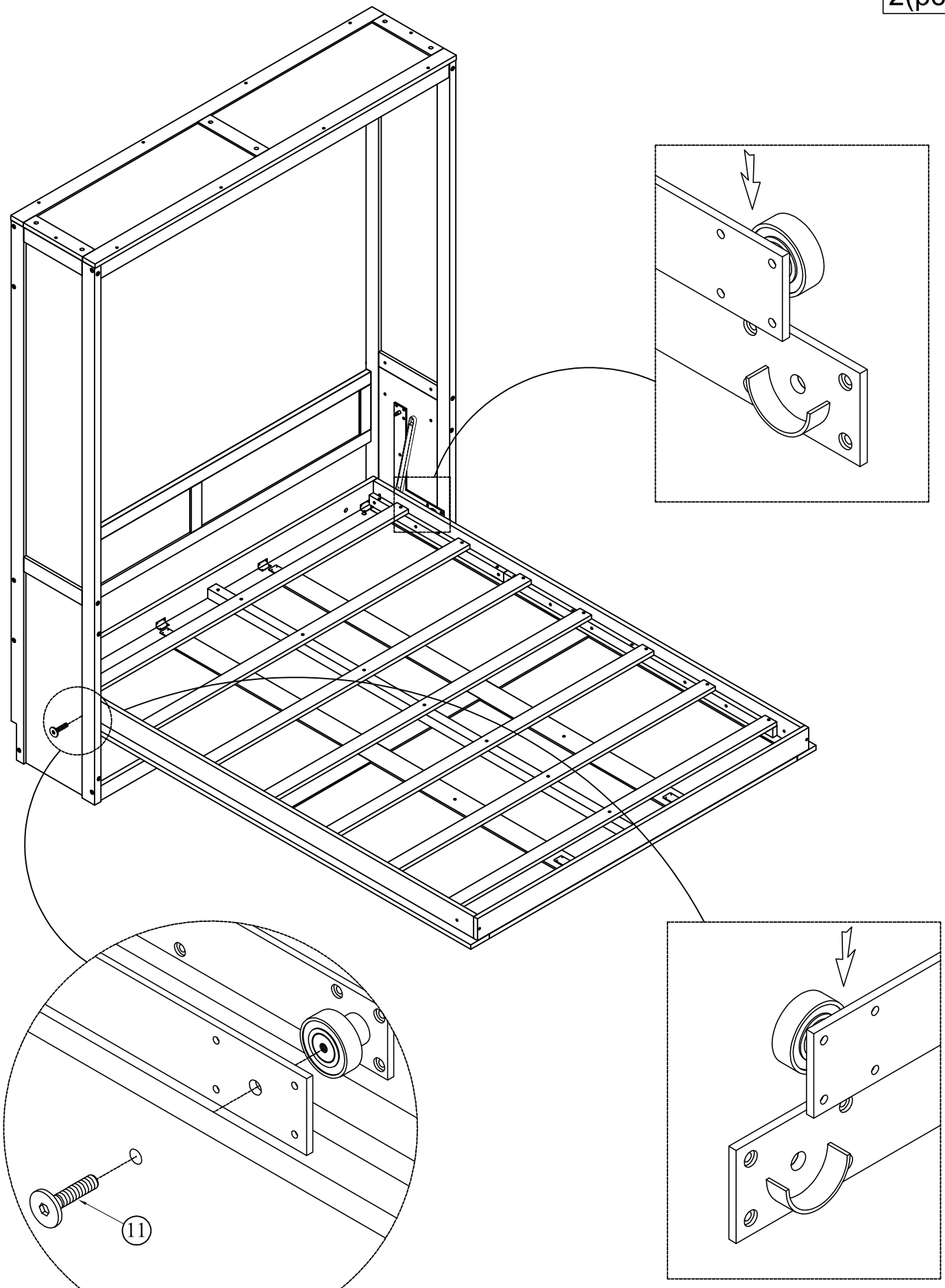

STEP 21:
Étape 21:

12
2(pcs)

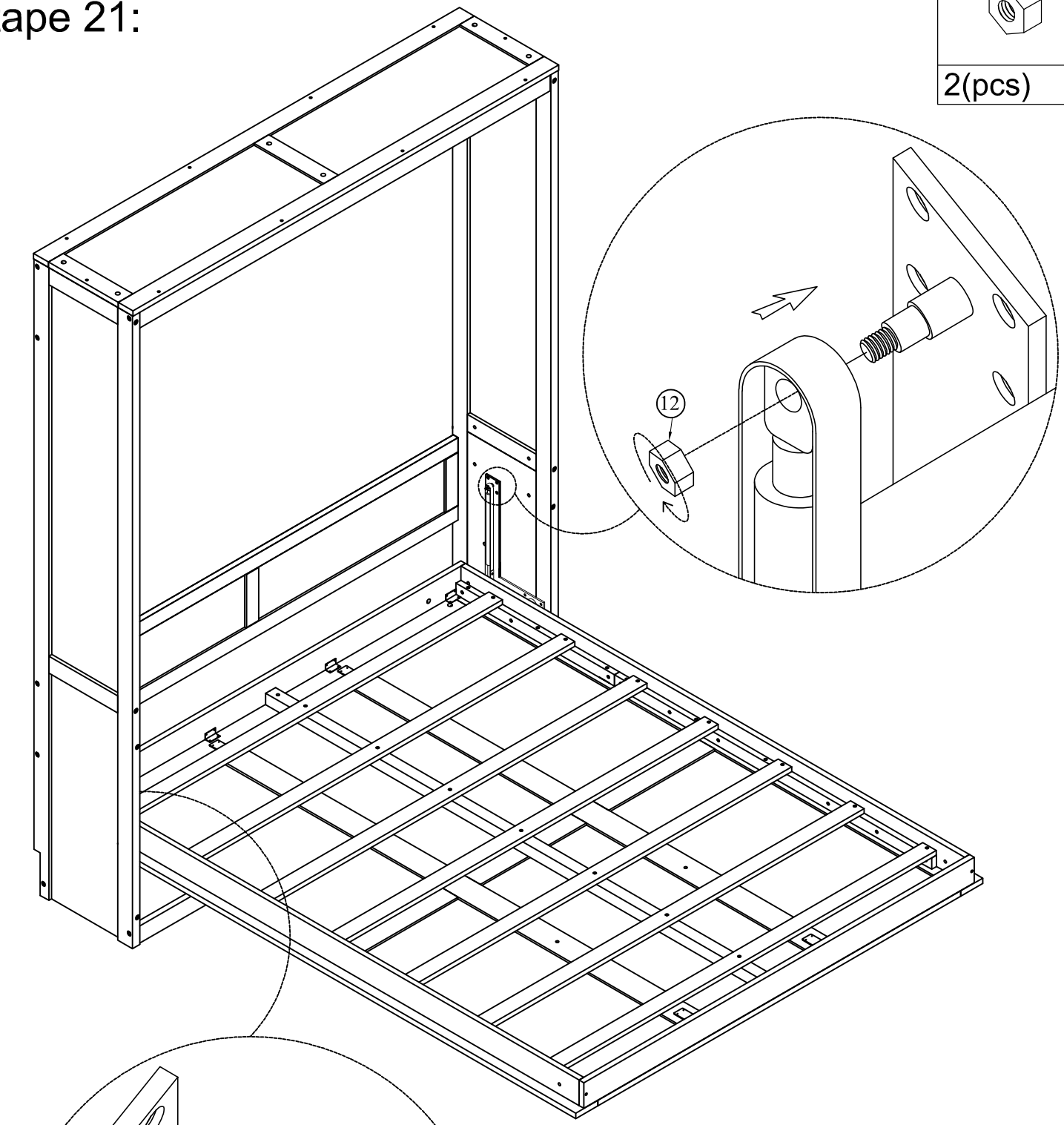

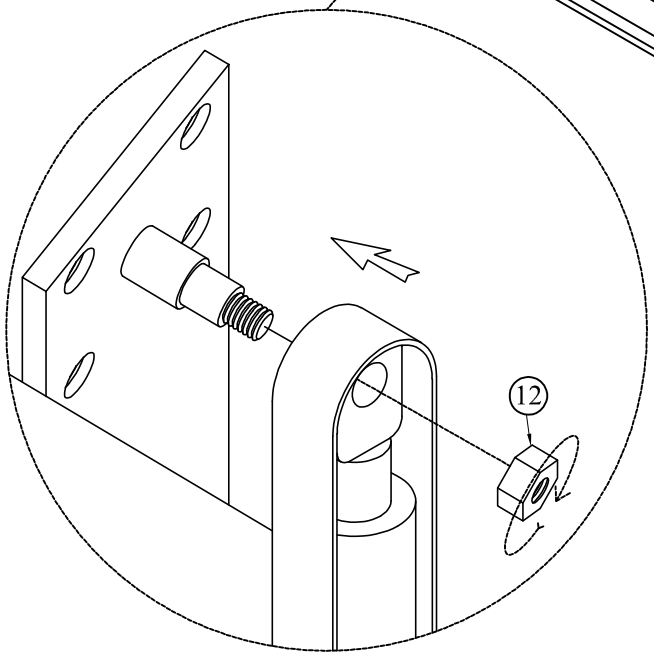

Before assembling, we need to remove the plastic ties.

Avant le montage, il faut d'abord retirer les attaches en plastique.

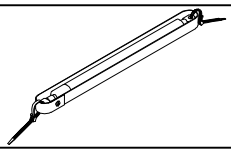

Press the lock and pull the cord out.

Appuyez sur le verrou et tirez sur le cordon.

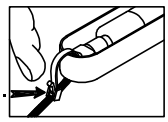

STEP 22:
Étape 22:

Move the bed frame in the direction of the arrow, pull the straps to the side, then use a screwdriver to open and remove the straps.

Déplacez le cadre de lit dans le sens de la flèche, tirez les sangles sur le côté, puis utilisez un tournevis pour ouvrir et retirer les sangles.

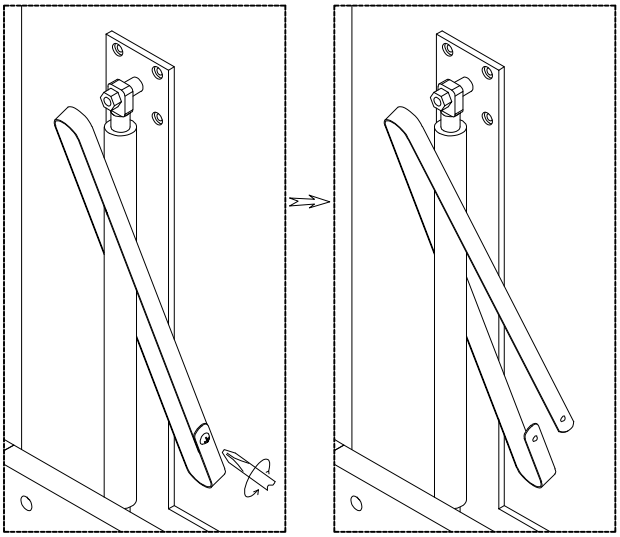

STEP 23:
Étape 23:

13	10	2
2(pcs)	2(pcs)	2(pcs)

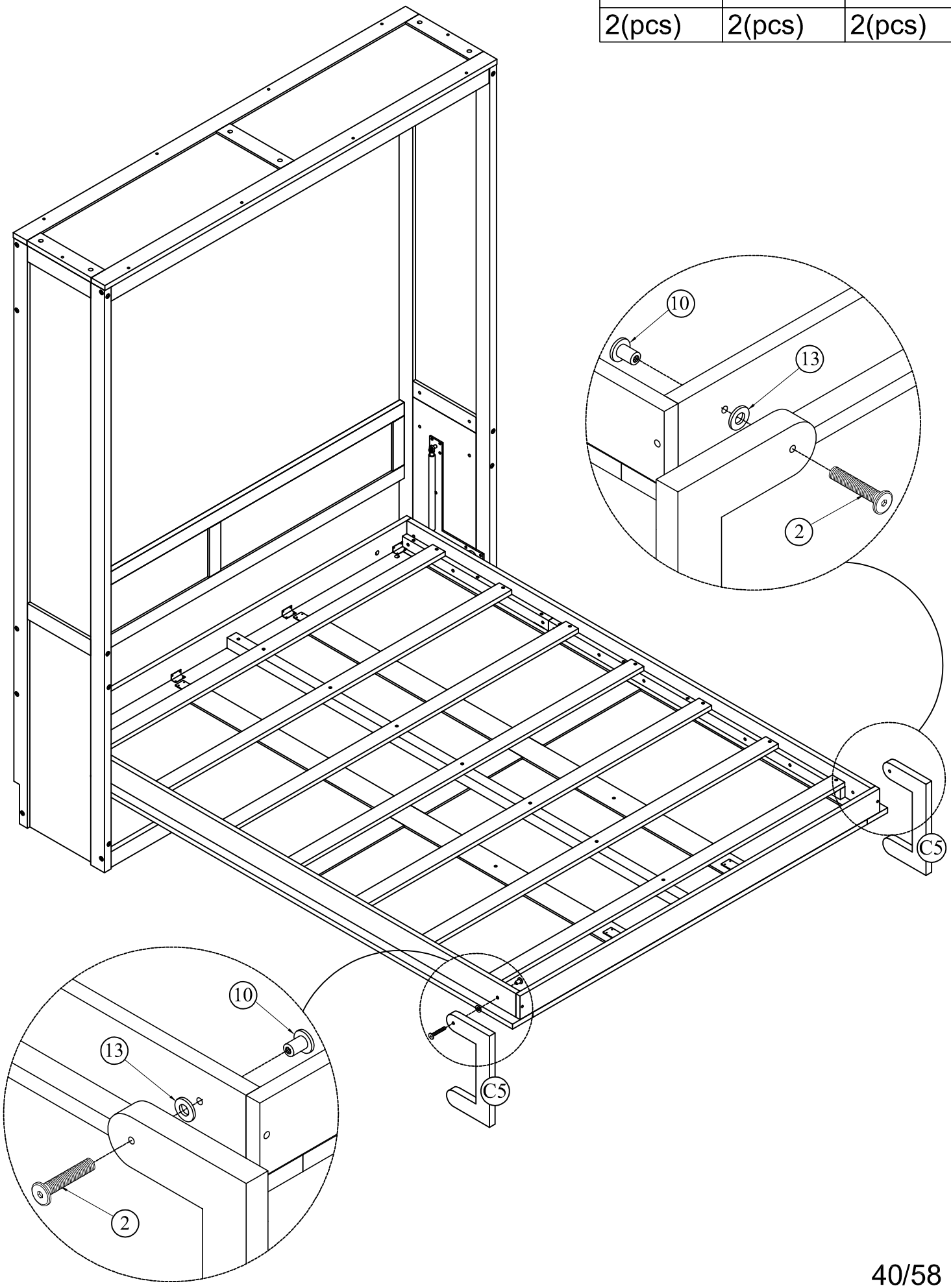

STEP 24:
Étape 24:

24	23
2(pcs)	4(pcs)

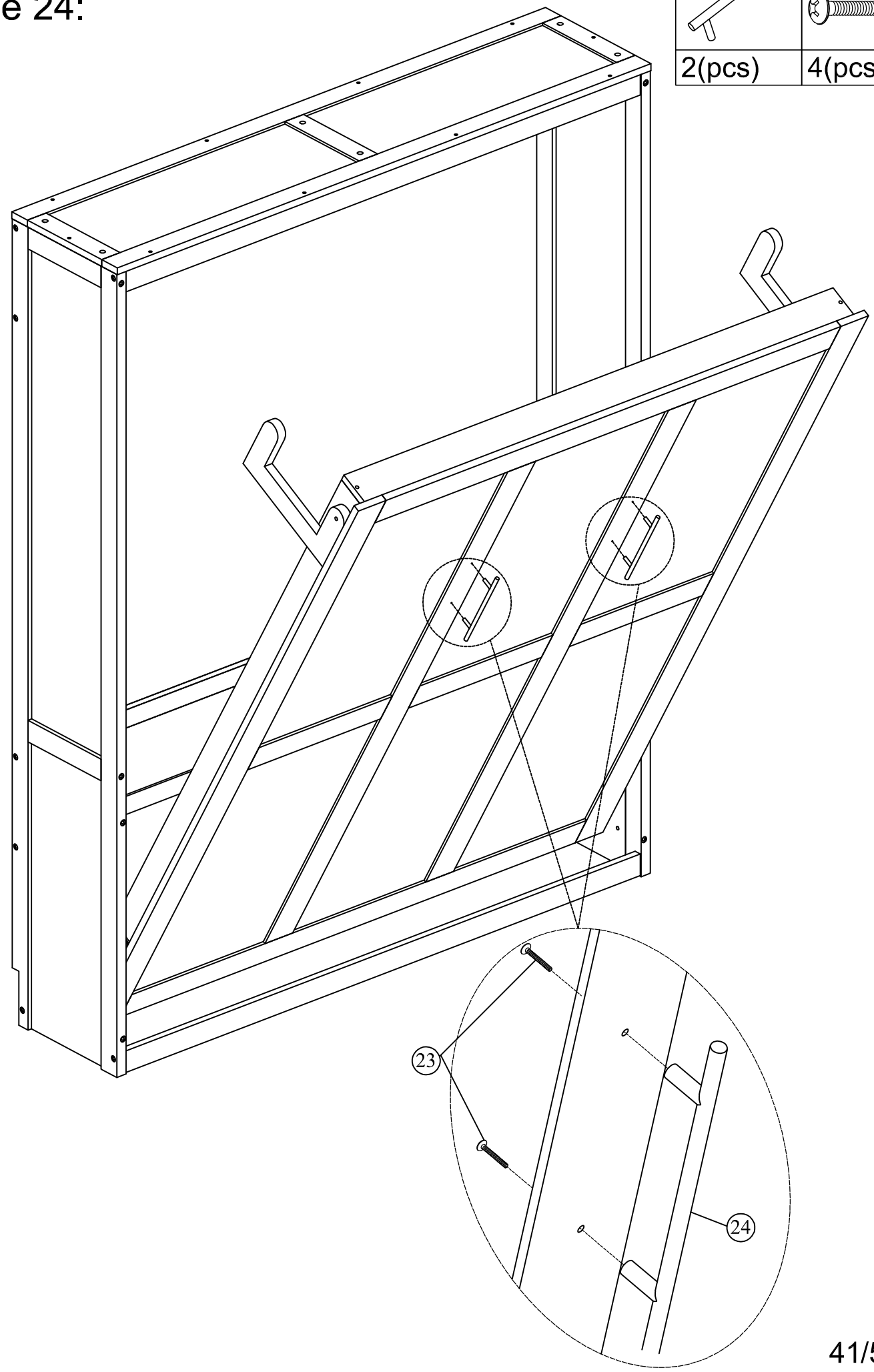

STEP 25:
Étape 25:

7	6	4
6(pcs)	6(pcs)	6(pcs)

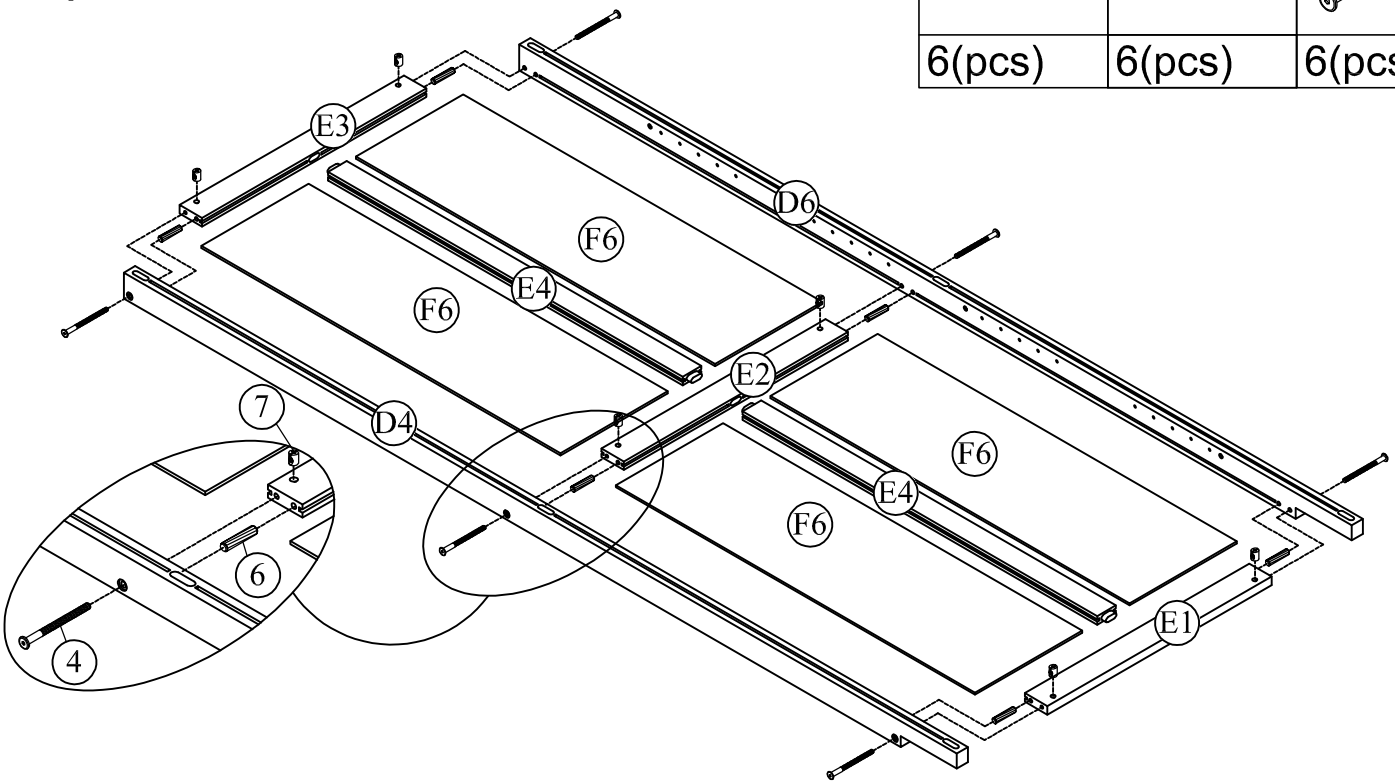

STEP 26:
Étape 26:

4
2(pcs)
5
4(pcs)
7
6(pcs)

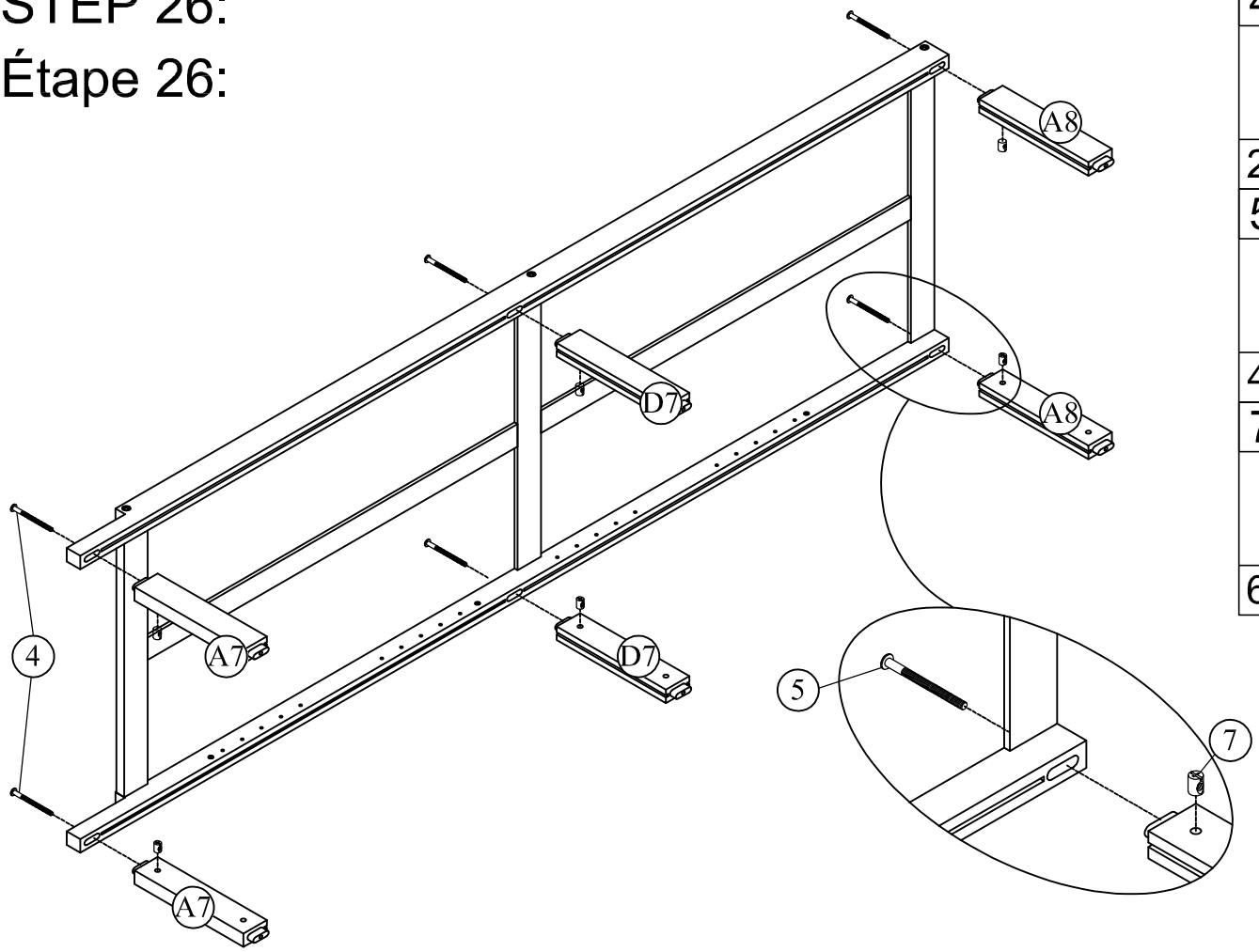

STEP 27:
Étape 27:

7	5
6(pcs)	6(pcs)

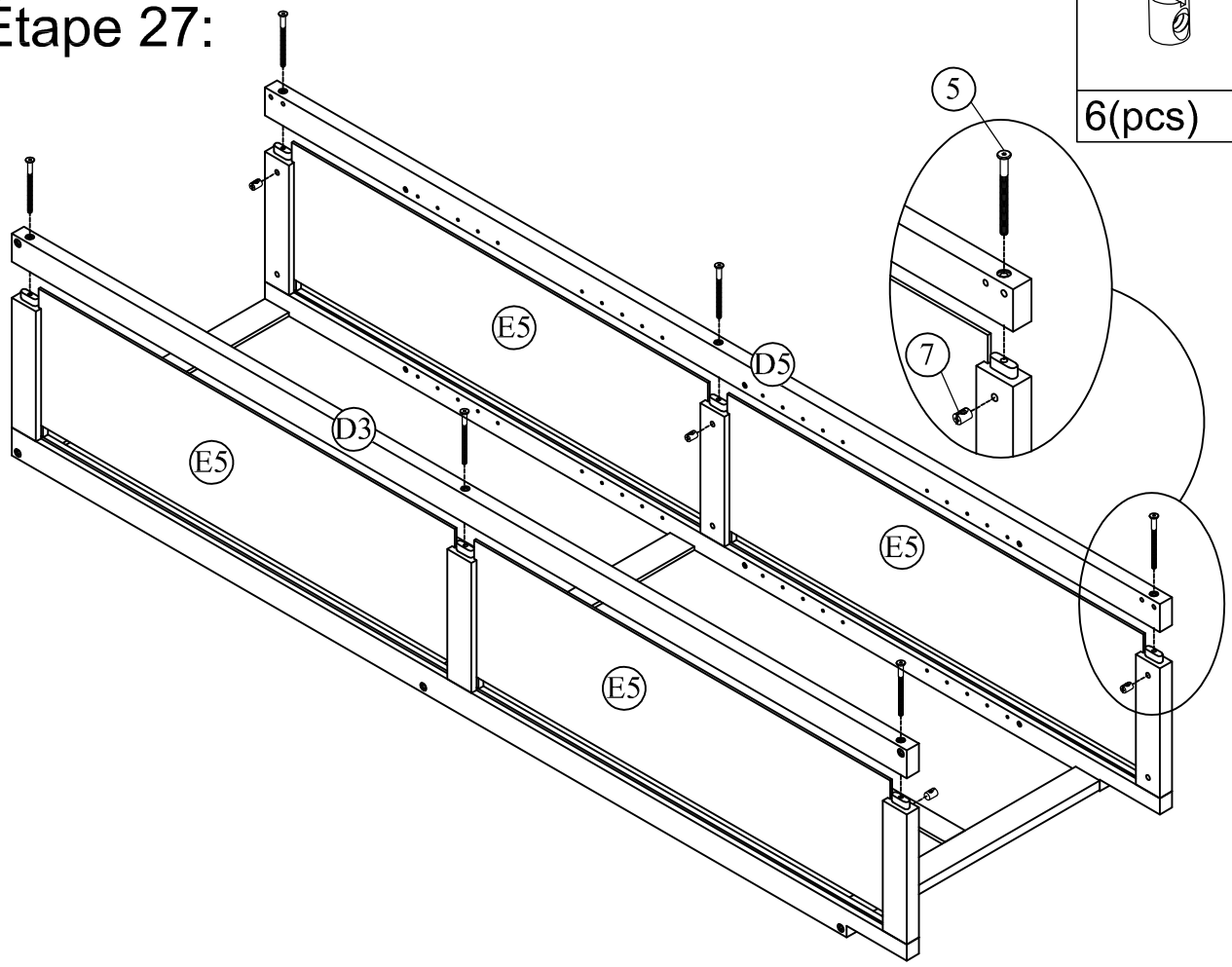

STEP 28:
Étape 28:

7	6	4
4(pcs)	4(pcs)	4(pcs)

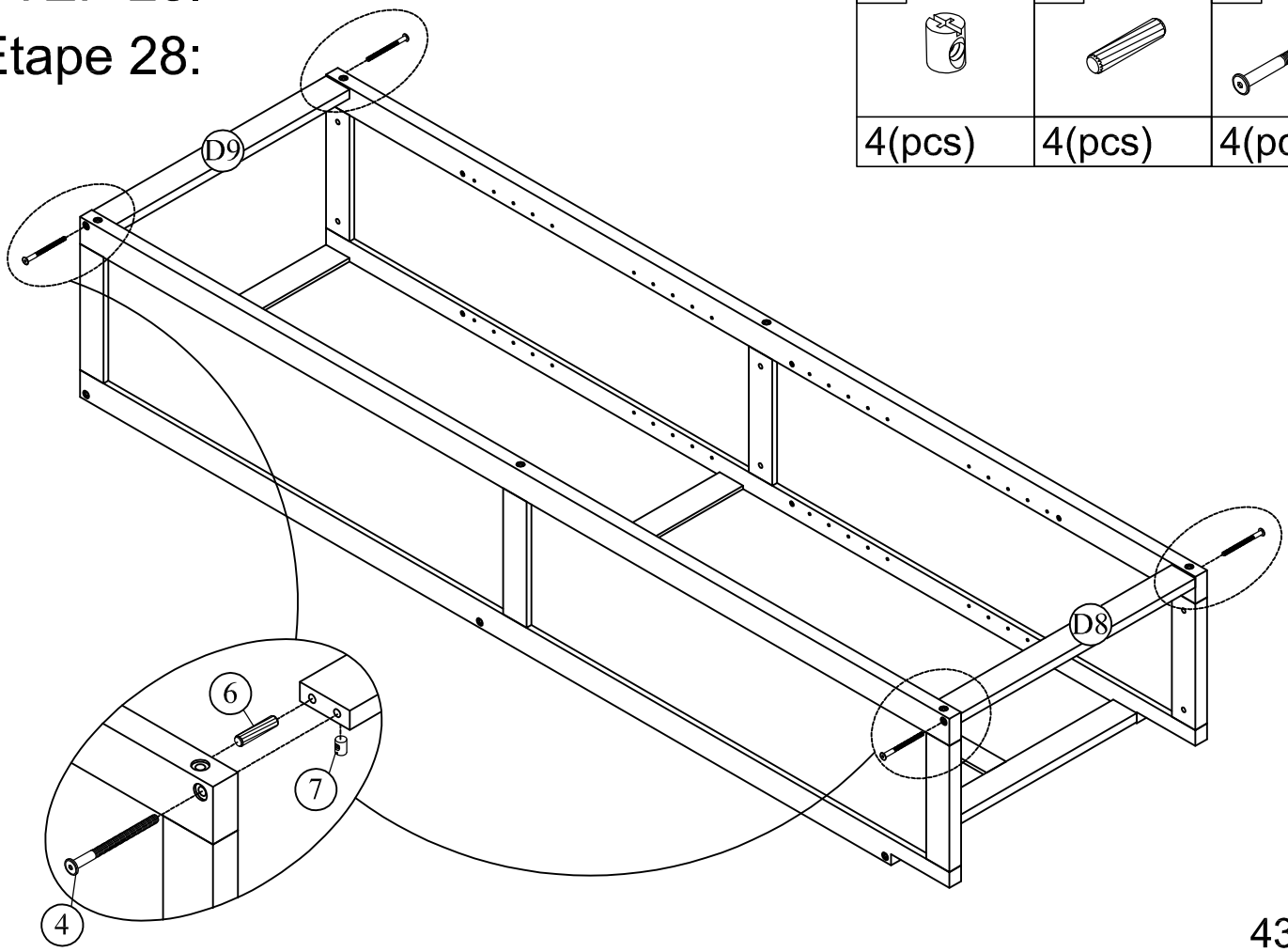

STEP 29:
Étape 29:

9	6
4(pcs)	8(pcs)

8
4(pcs)

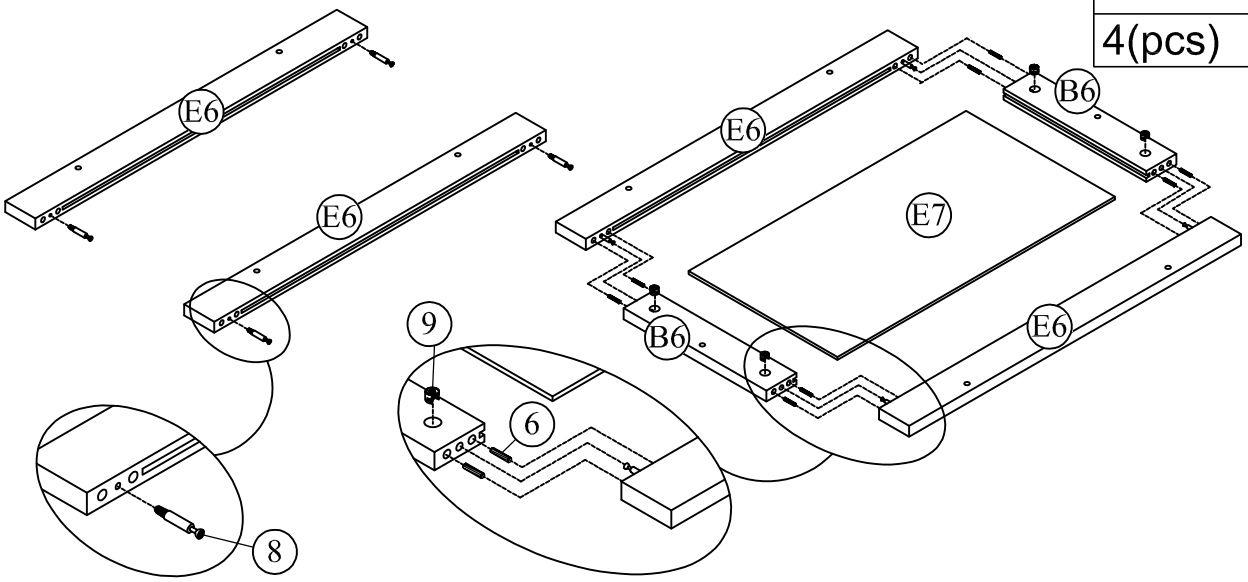

STEP 30:
Étape 30:

6	1
2(pcs)	6(pcs)

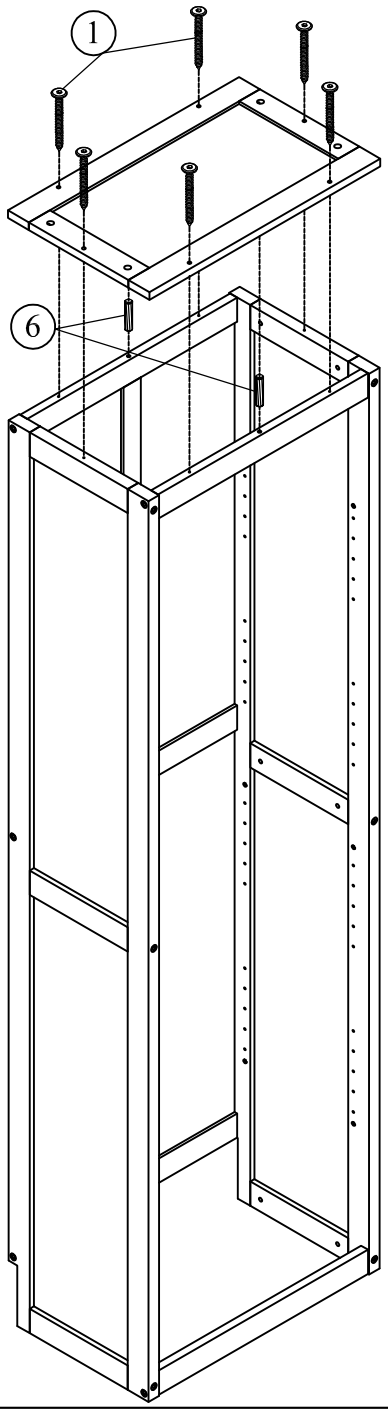

STEP 31:
Étape 31:

19	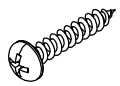
4(pcs)	

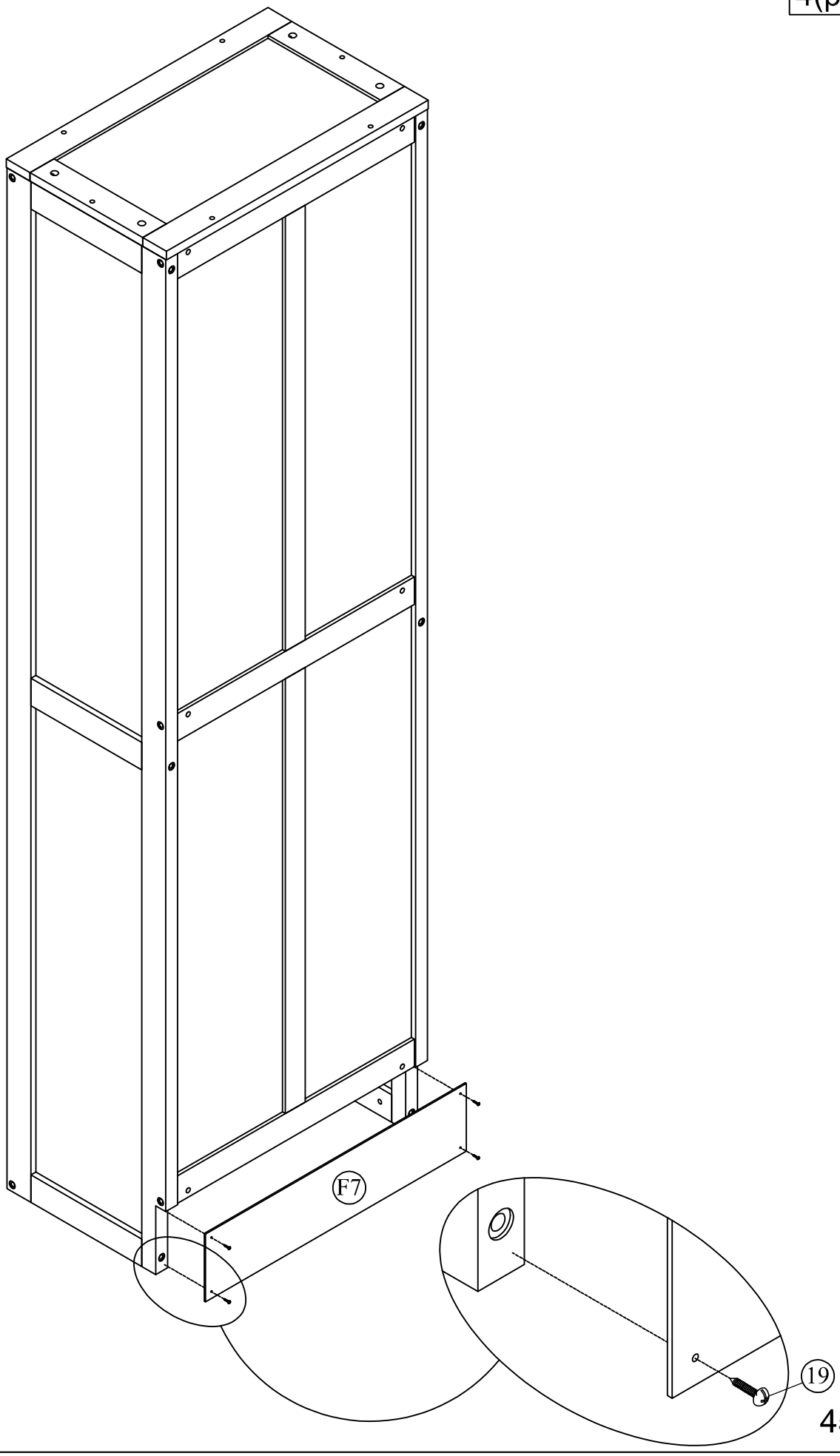

STEP 32:

Étape 32:

17
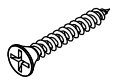
3(pcs)

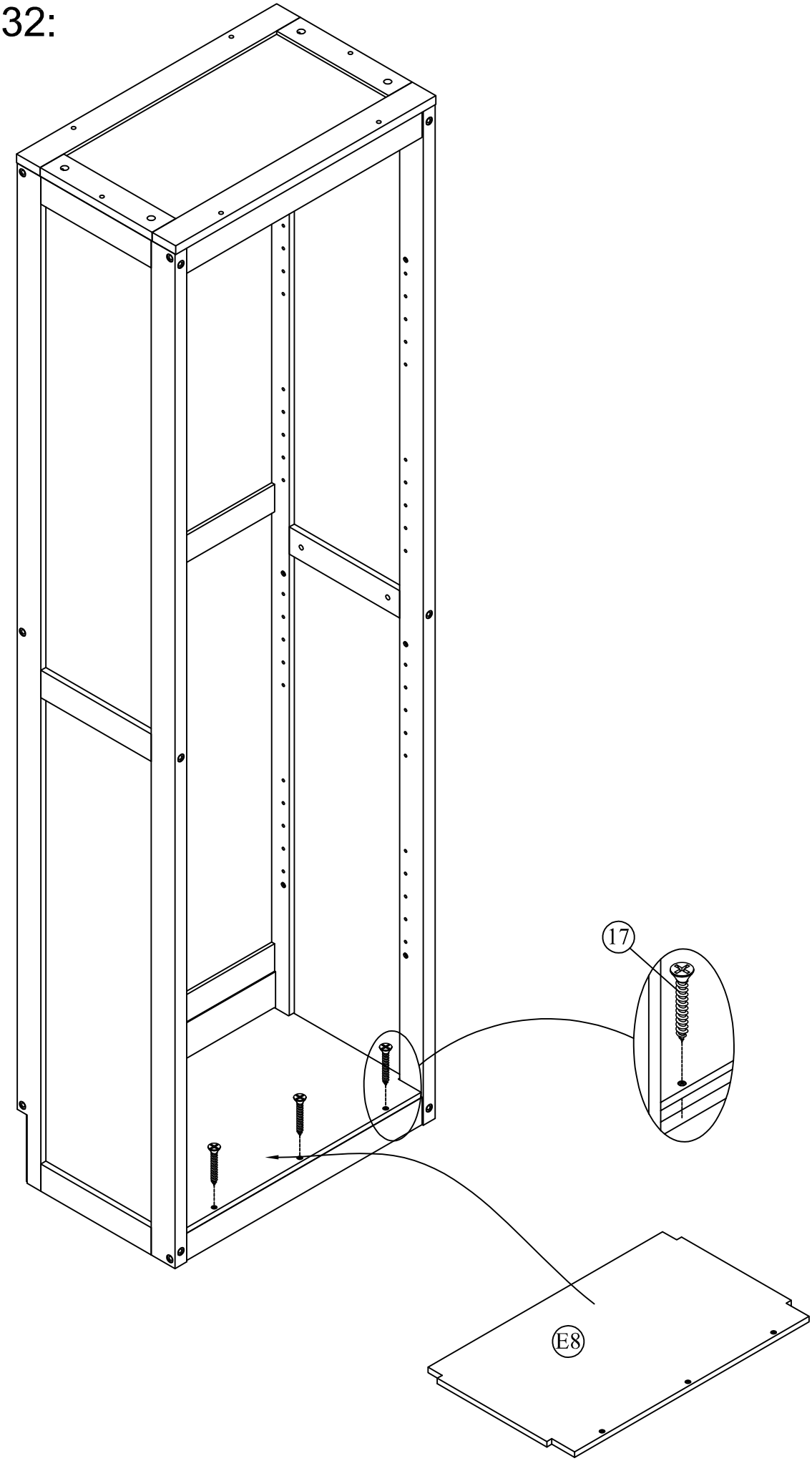

STEP 33:
Étape 33:

15	22
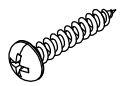	
16(pcs)	16(pcs)

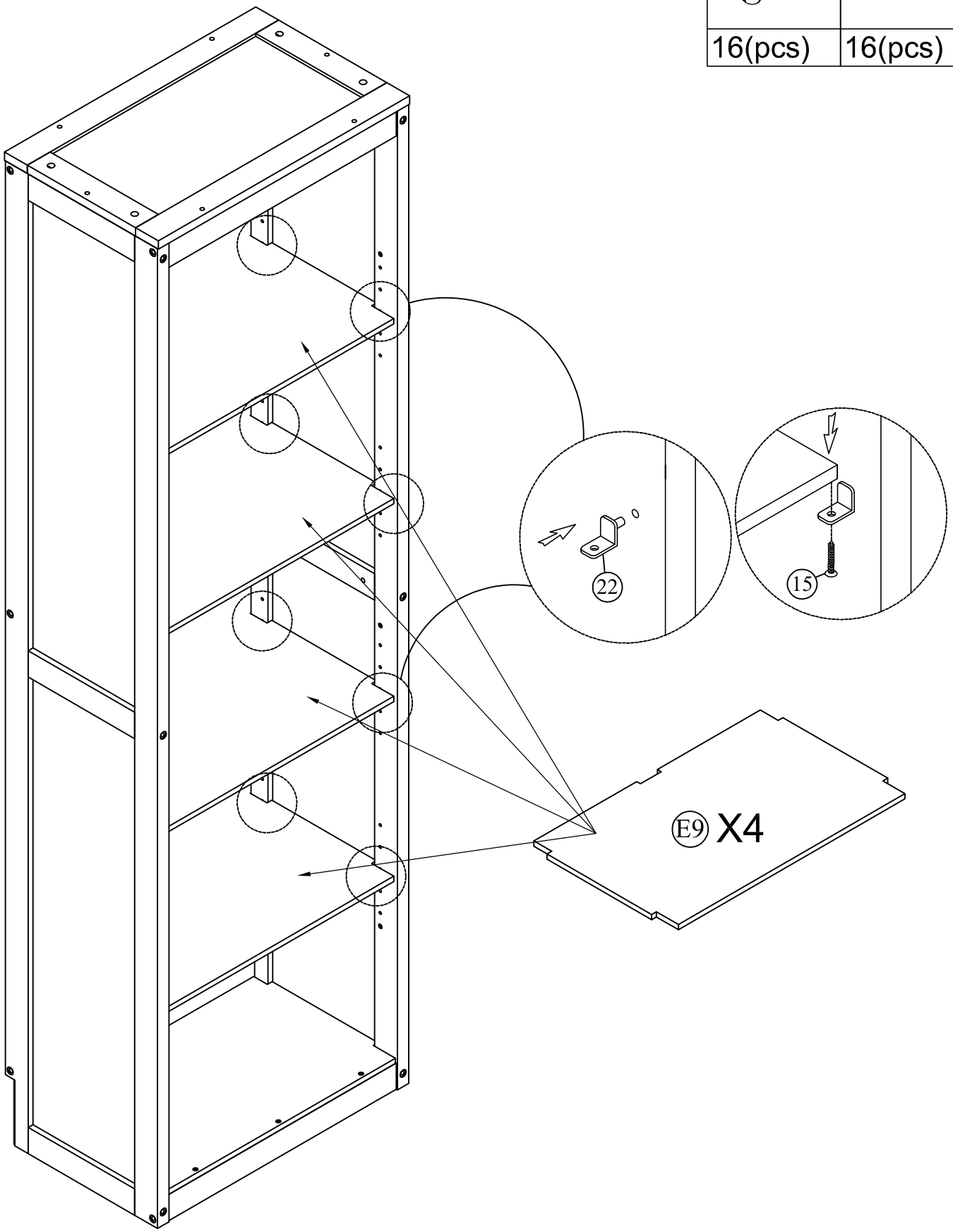

OPTION 2

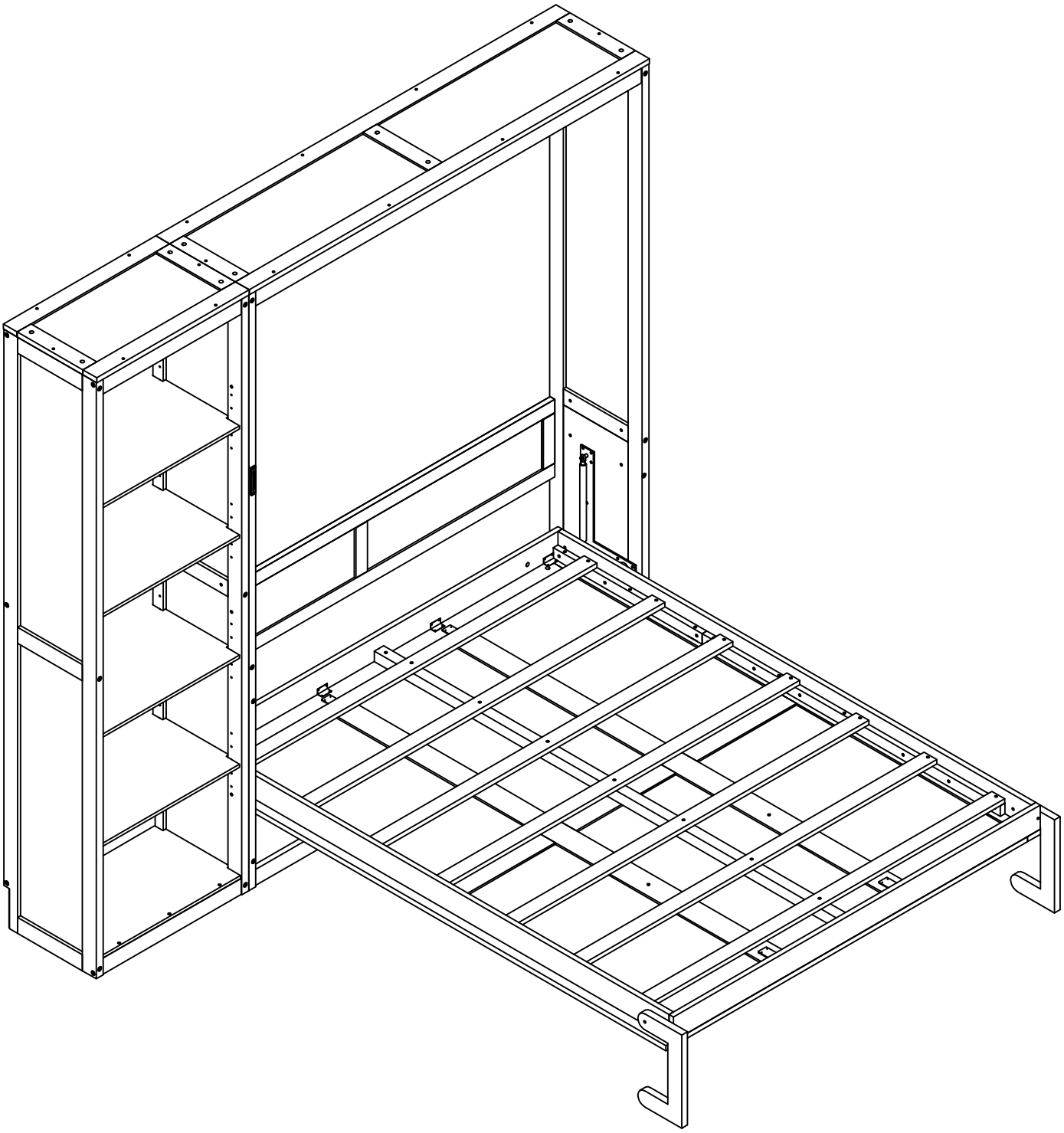

STEP 34:
Étape 34:

18
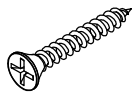
6(pcs)

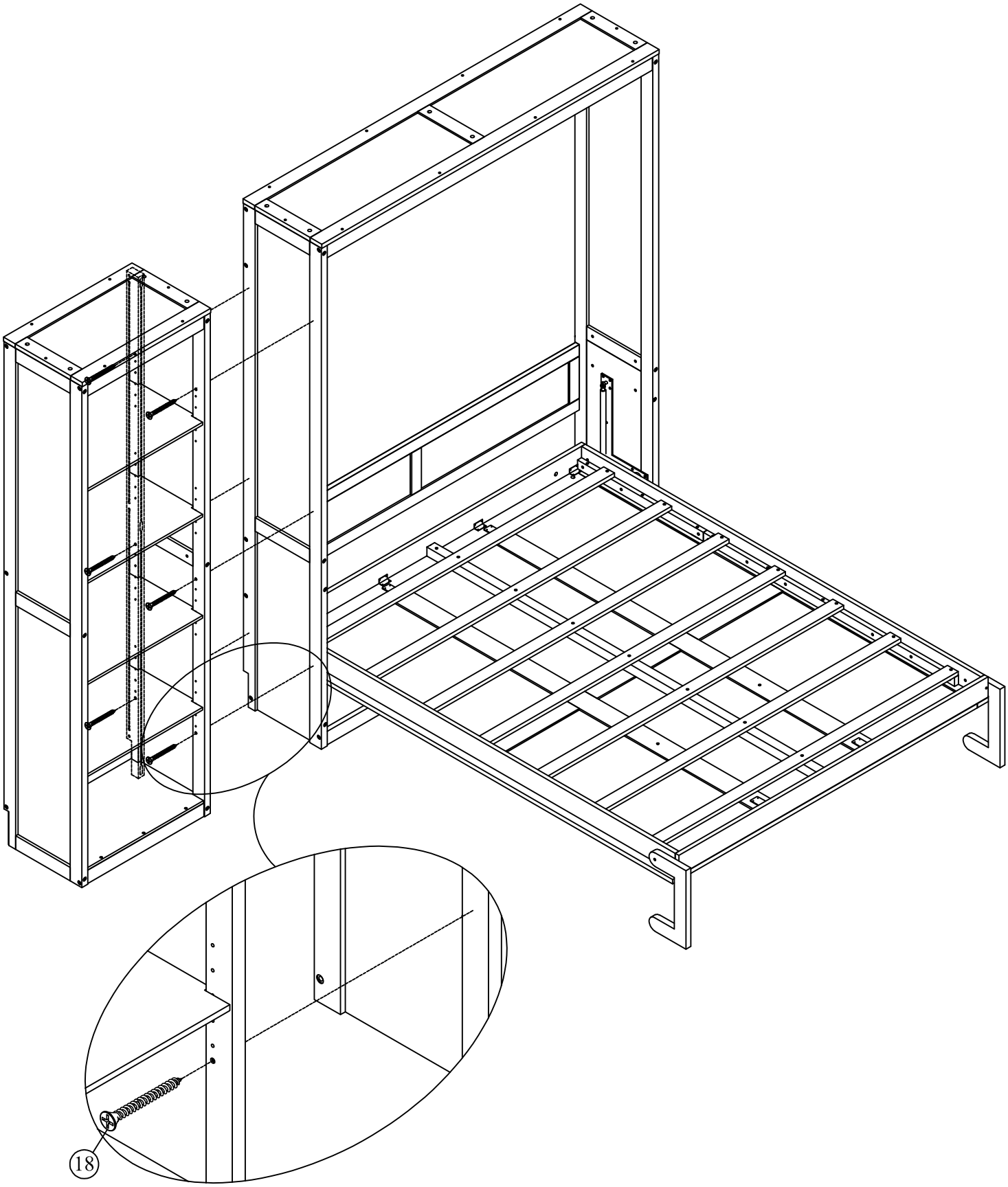

STEP 35:
Étape 35:

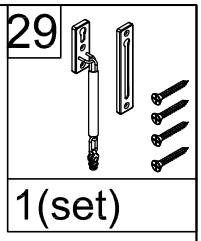

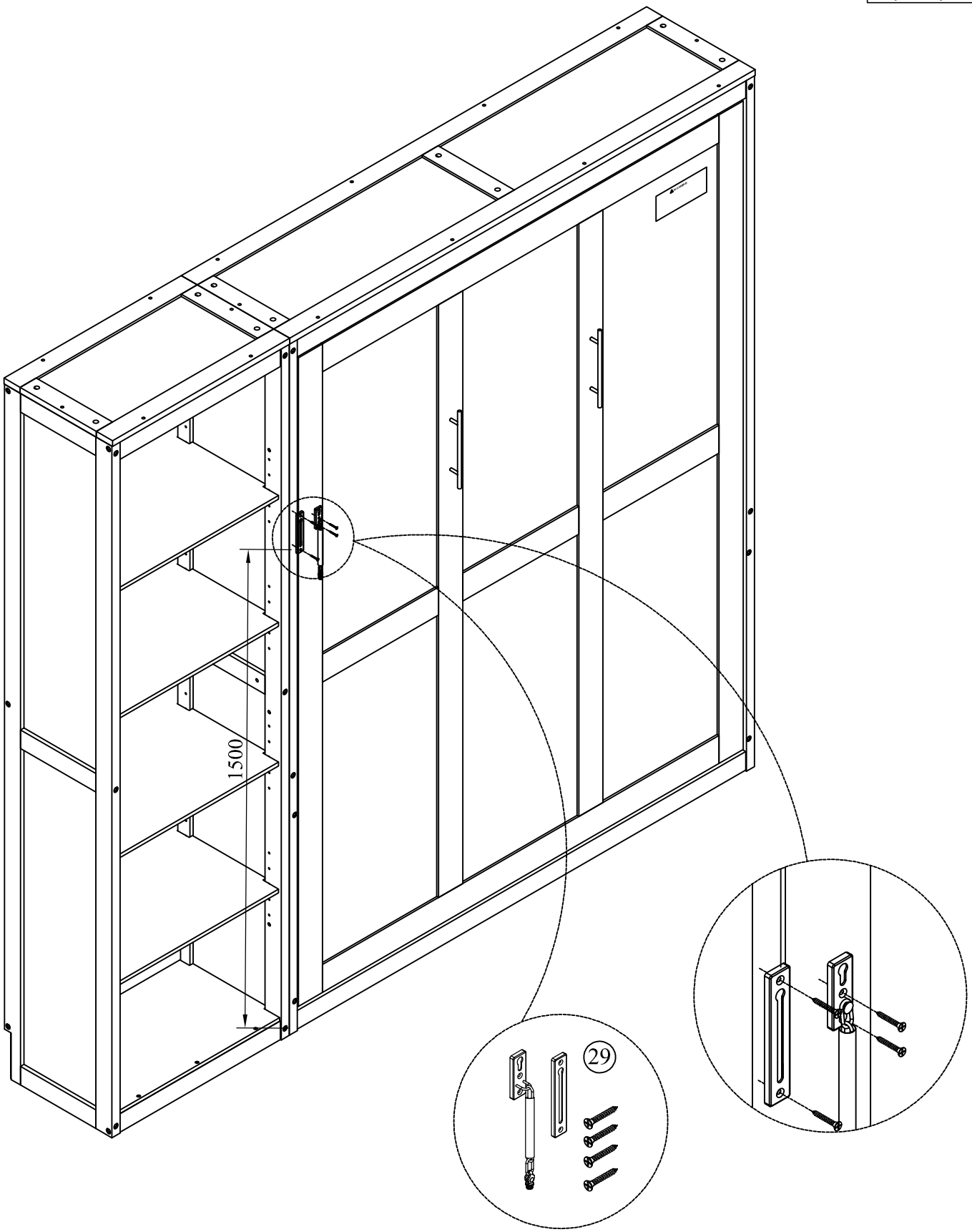

FINISH OPTION 2

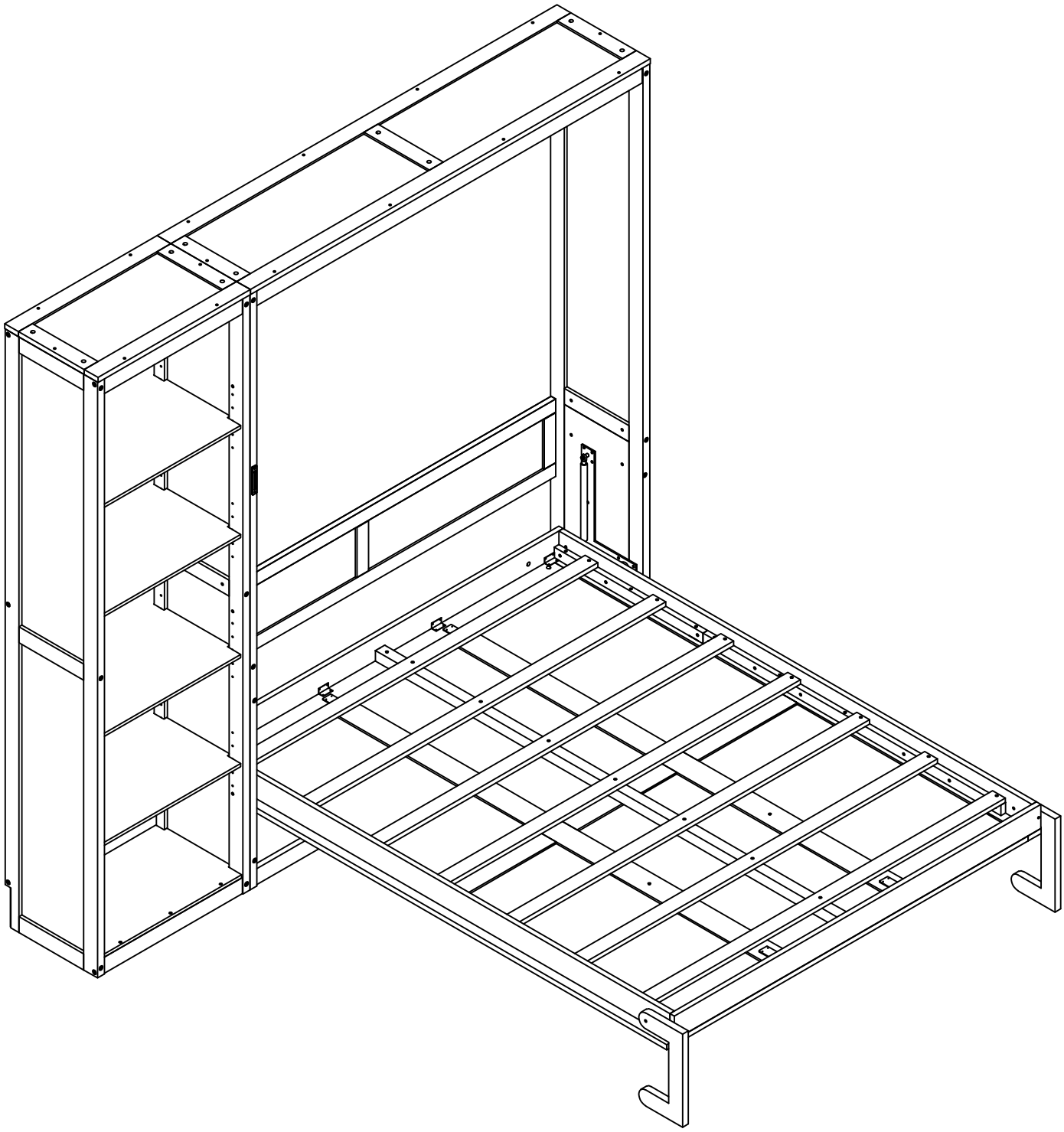

OPTION 4

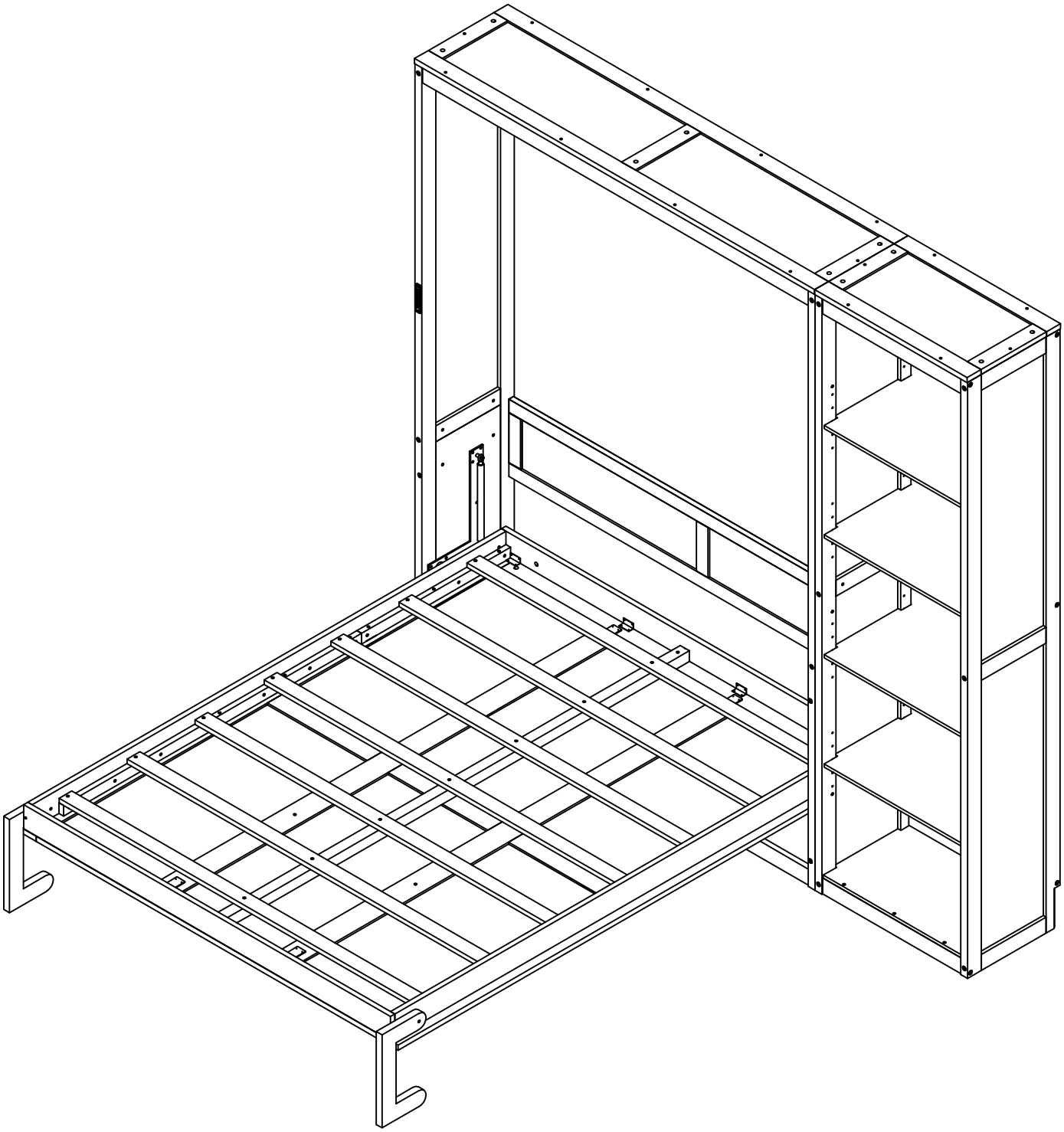

STEP 36:
Étape 36:

18
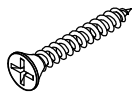
6(pcs)

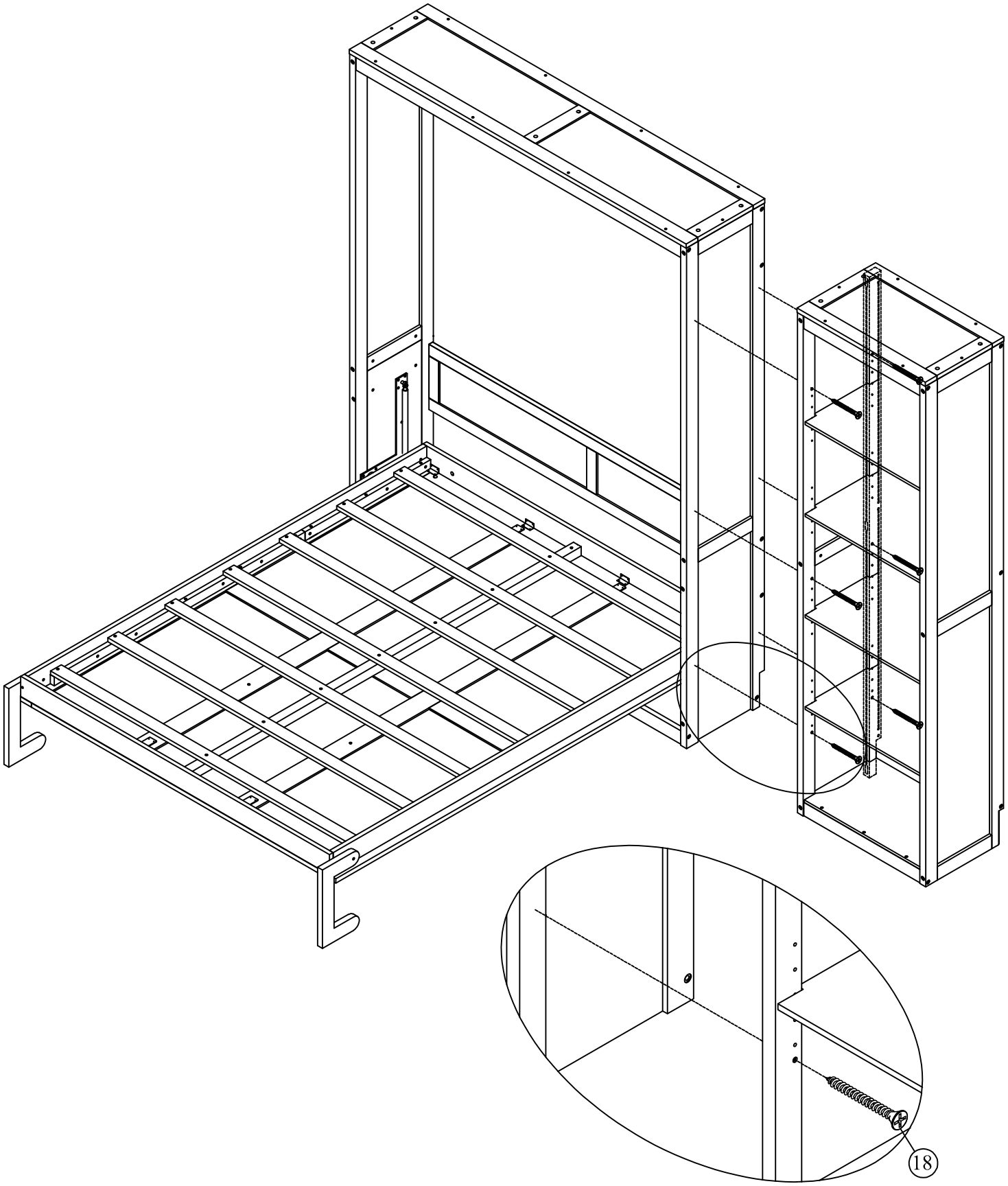

STEP 37:
Étape 37:

29	
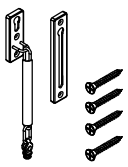	
1(set)	

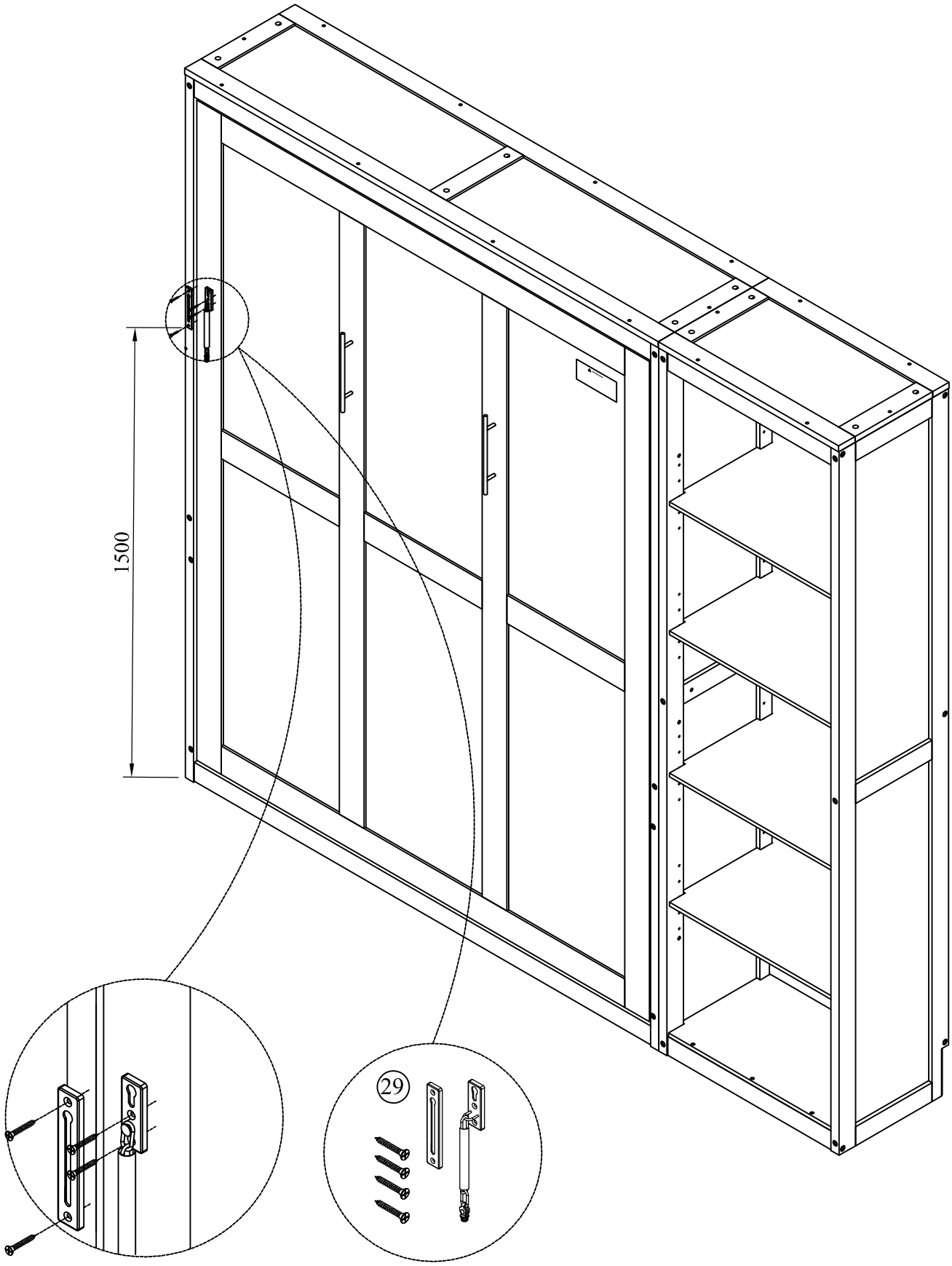

FINISH OPTION 4

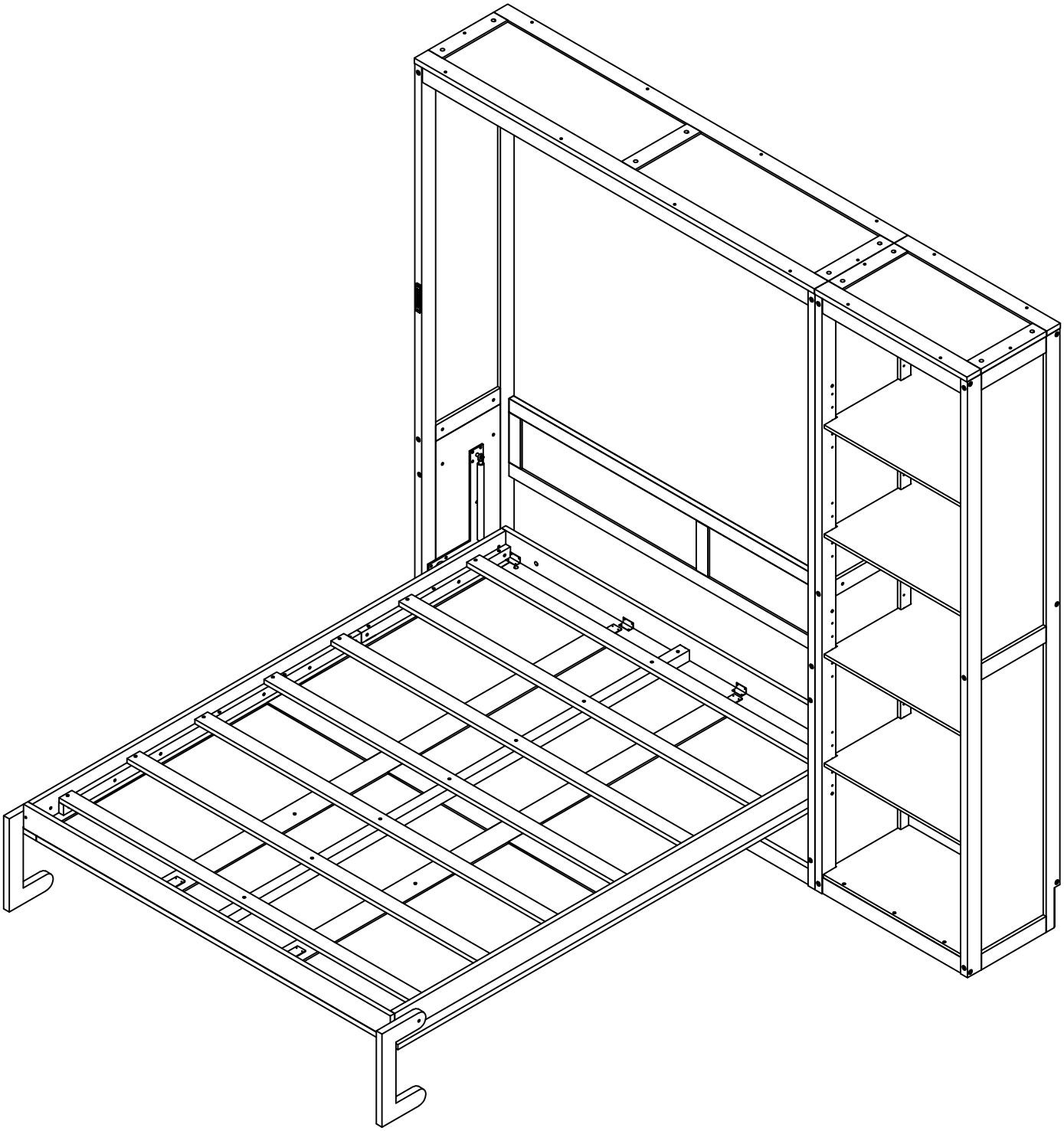

OPTION 2

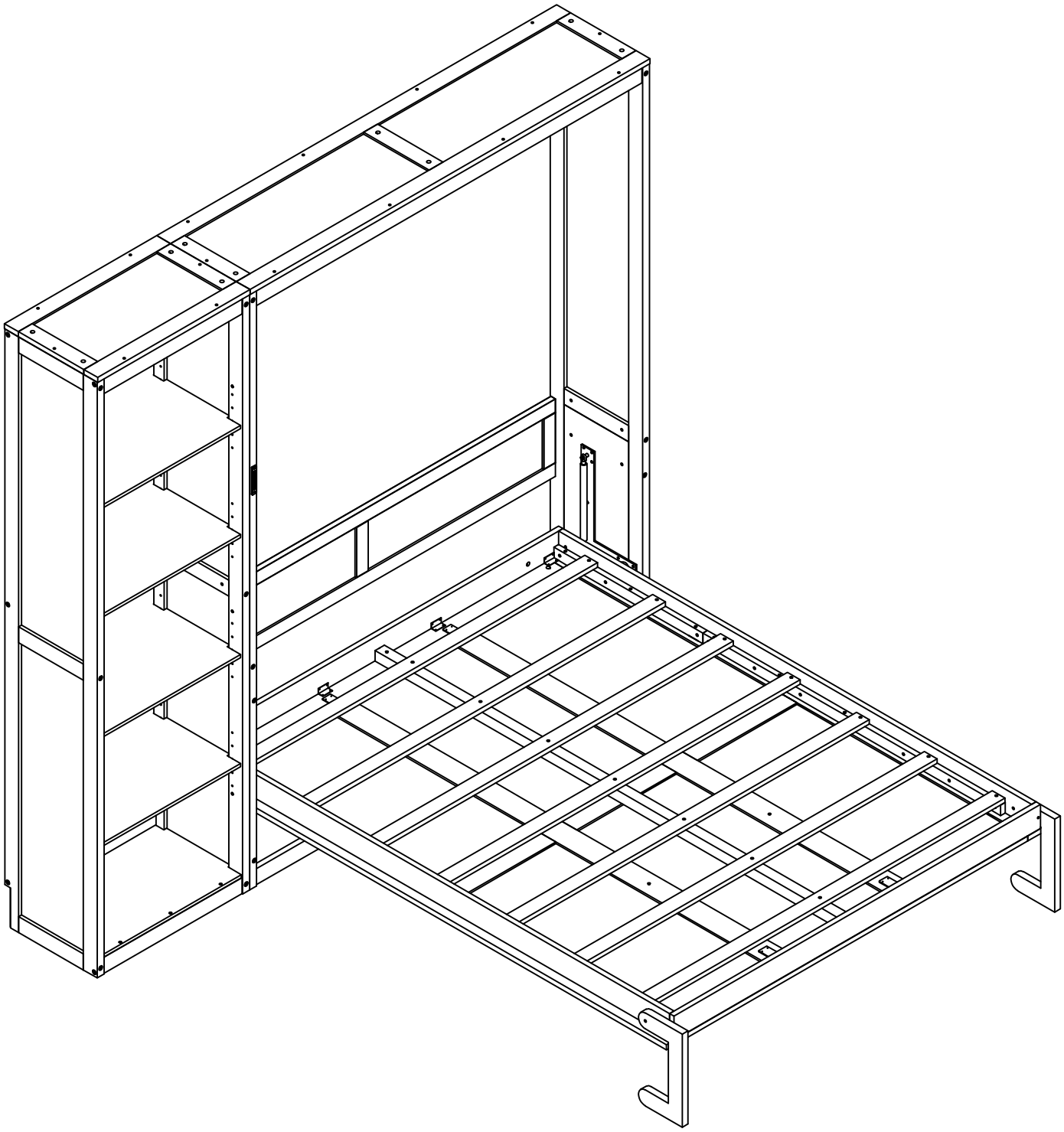

STEP 1:

Étape 1:

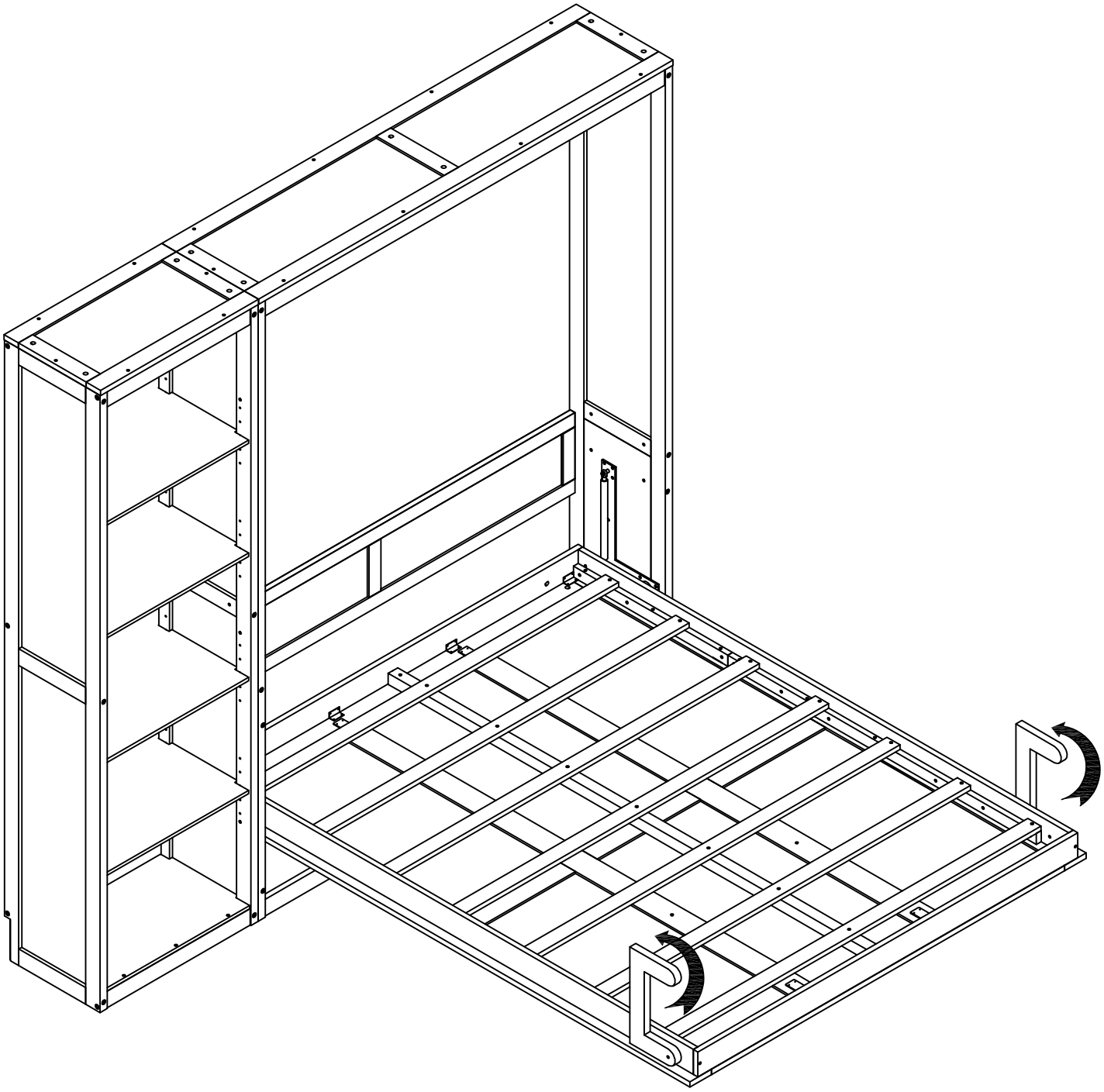

STEP 2:
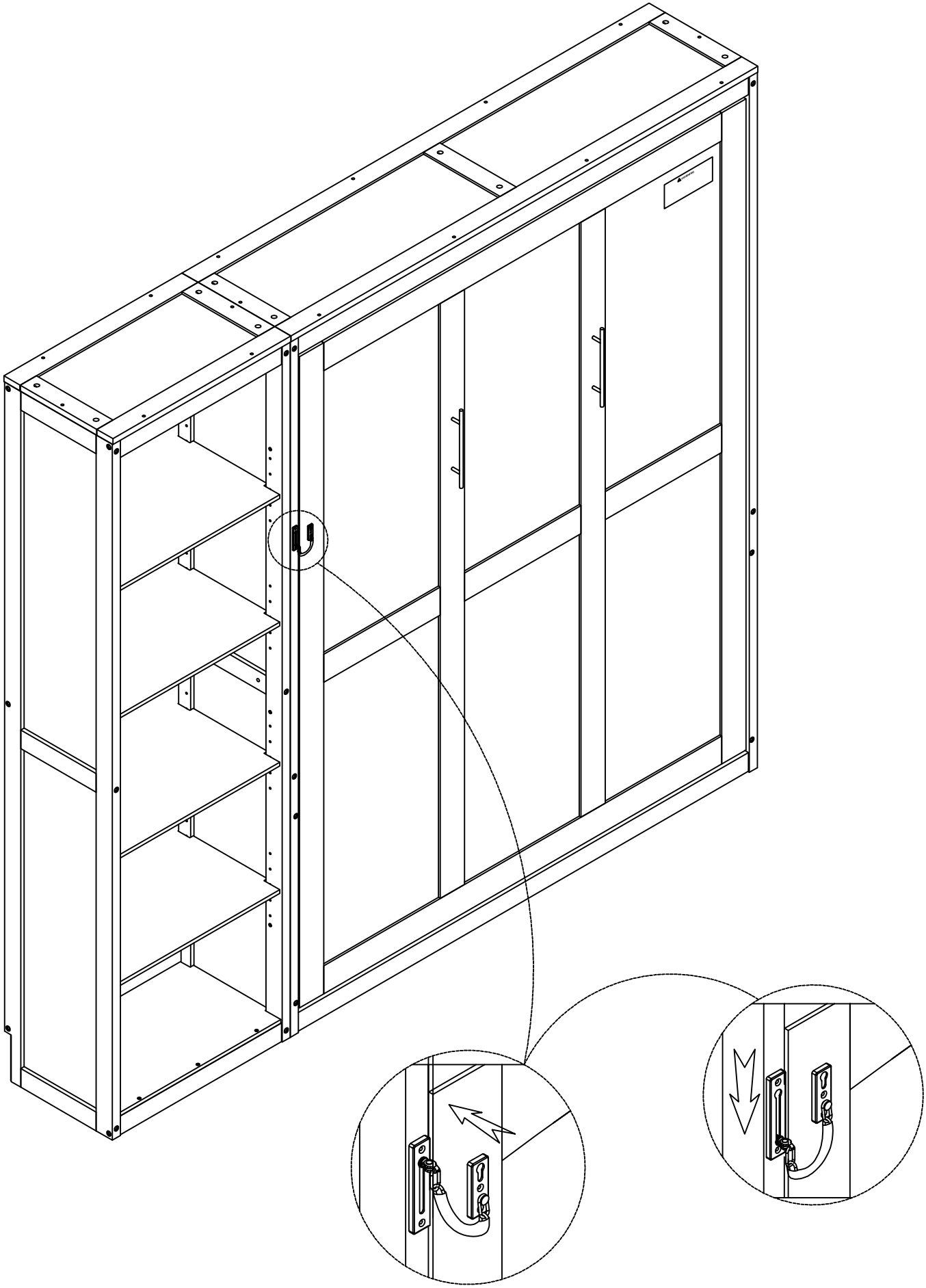
Étape 2: