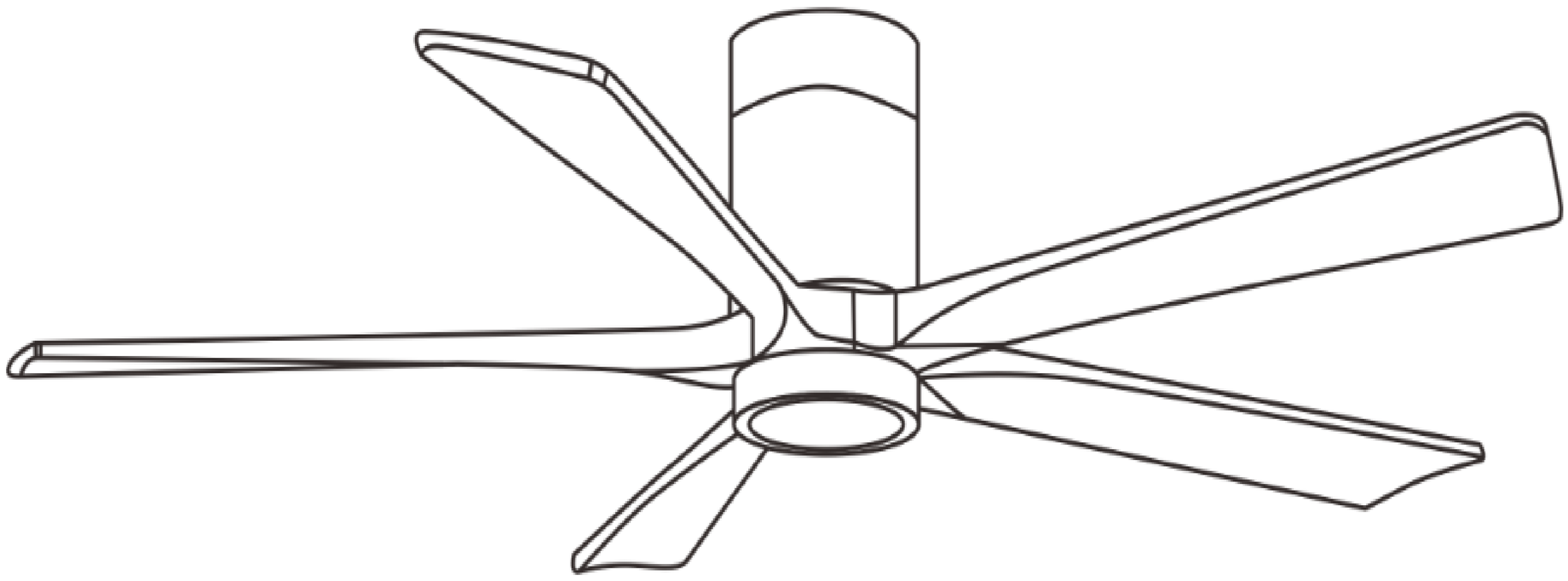

CEILING FAN WITH LIGHTS
INSTALLATION MANUAL

F578-60DB

SAFTY RULES

1. To reduce the risk of electric shock, insure electricity has been turned off at the circuit breaker or fuse box before beginning.
2. All wiring must be in accordance with the National Electrical Code and local electrical codes. Electrical installation should be performed by a qualified licensed electrician.
3. WARNING: To reduce the risk of electrical shock and fire, do not use this fan with any solid-state fan speed control device.
4. WARNING: To reduce the risk of fire, electric shock, or personal injury, mount to outlet box marked "Acceptable for Fan Support of 45kg (99.12 lbs.) Or Less" and use mounting screws provided with the outlet box. Most outlet boxes commonly used for the support of light fixtures are not acceptable for fan support and may need to be replaced. Due to the complexity of the installation of this fan, a qualified licensed electrician is strongly recommended.
5. The outlet box and support structure must be securely mounted and capable of reliably supporting a minimum of 45KGS.
6. The fan must be mounted with a minimum of 7 feet clearance from the trailing edge of the blades to the floor.
7. Avoid placing objects in the path of the blades.
8. To avoid personal injury or damage to the fan and other items, be cautious when working around or cleaning the fan.
9. Do not use water or detergents when cleaning the fan or fan blades. A dry dust cloth or lightly dampened cloth will be suitable for most cleaning.
10. After making electrical connections, spliced conductors should be turned upward and pushed carefully up into the outlet box. The wires should be spread apart with the grounded conductor and the equipment-grounding conductor on one side of the outlet box.
11. Electrical diagrams are for reference only.
12. The fan is suitable for indoor use only.

TOOLS REQUIRED

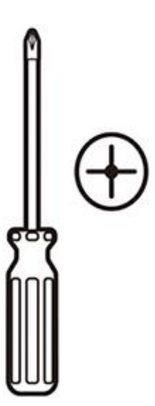

Phillips screwdriver



Flat blade screwdriver



Step ladder



Wire stripper

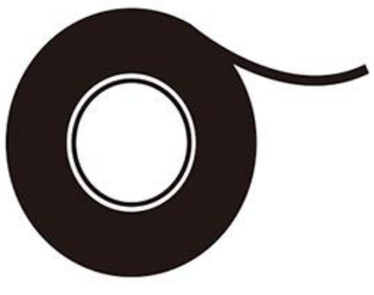

Electrical tape

BEFORE INSTALLATION

Unpack your fan and check the contents. You should have followings:

Contact a licensed electrician if you are not good at performing electrical work. It’ s the licensed electrician who installs the fan, if required by the local code. Do not use the fan with a dimmer switch. Turn off power at breaker.

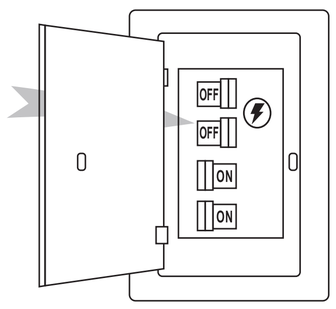

Tools and Materials Required



External Hexagonal Wrench



Wire Stripper



Phillips Screwdrive



Step Ladder

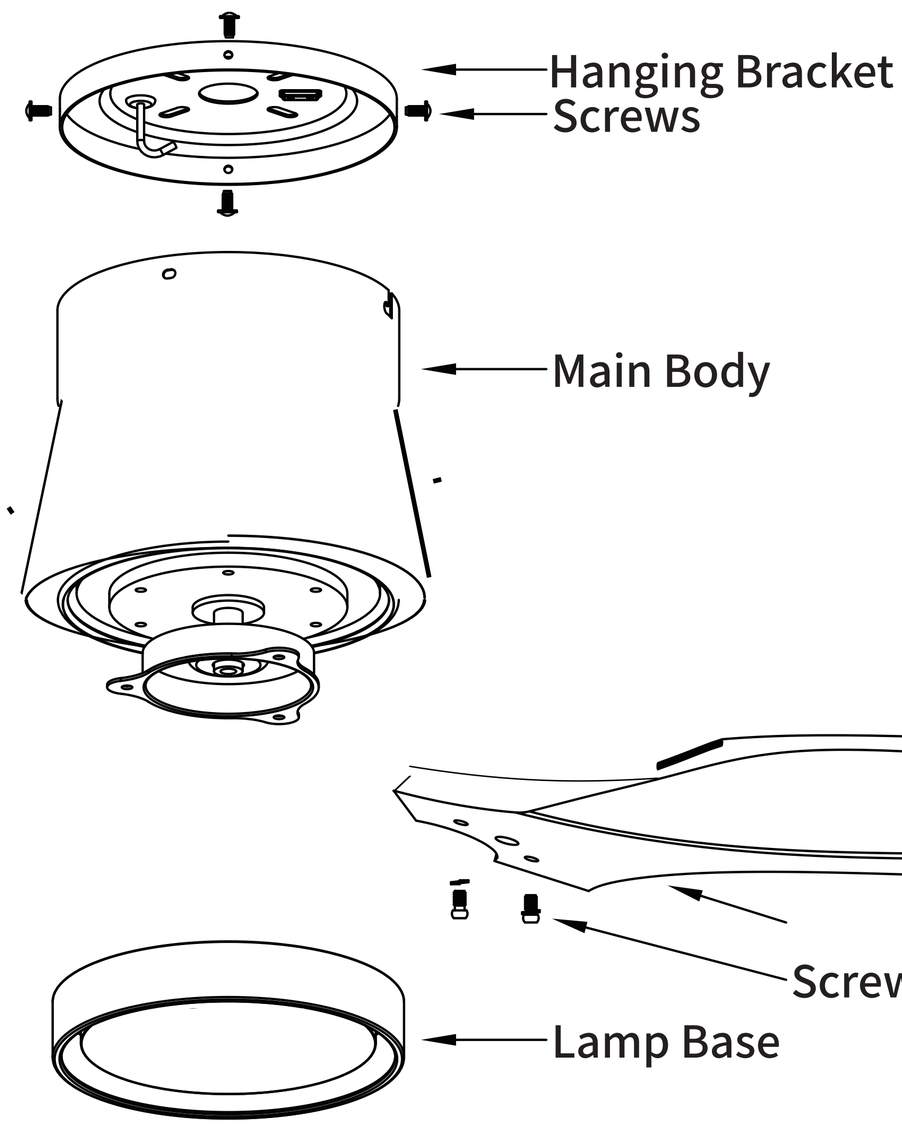

	1/4*15 screw	6	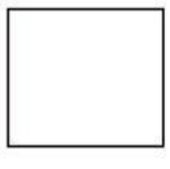	Balance sticker	2		Explosion screw	4		Gasket	6		Self-tapping screws	4

INSTALL THE FAN

Tools Required: Phillips Screwdriver, Pair of Pliers, Straight slot screwdriver, Adjustable Wrench, Step Ladder and Wire Cutters.

INSTALL THE MOUNTING BRACKET

To prevent personal injury and damage, ensure that the hanging location allows the blade a clearance of 7.5 feet (2.3 metets) from the floor and 18 inches (45.72 centimeters) from any wall or obstruction.

1. For the concrete ceiling: Mark the location for the ceiling fan first, then drill two holes in the ceiling to aid in securing ceiling bracket with two expansion screws provided, and secure the mounting bracket to the building structure with two expansion screws provided, tighten the screws. (Fig.1)

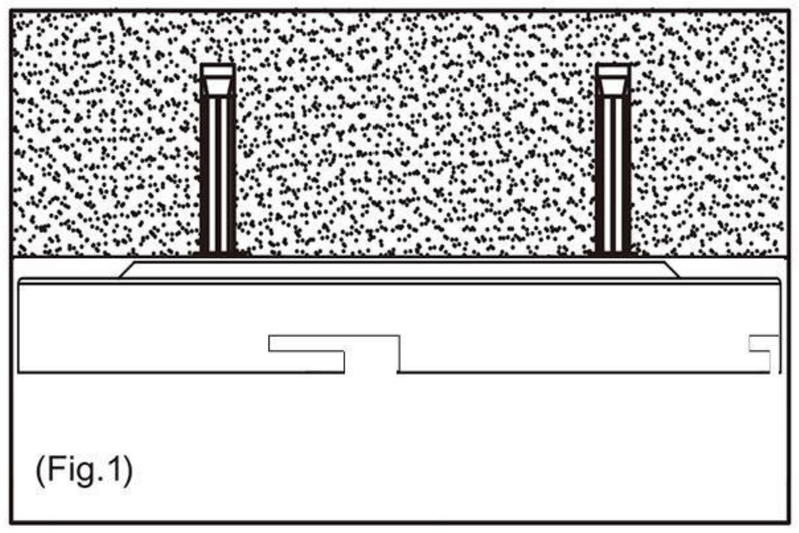

(Fig.1)

For the Wood Ceiling: Mark the location for the ceiling fan first, secure the mounting bracket to the building structure with four wood screws provided. (Fig.2)

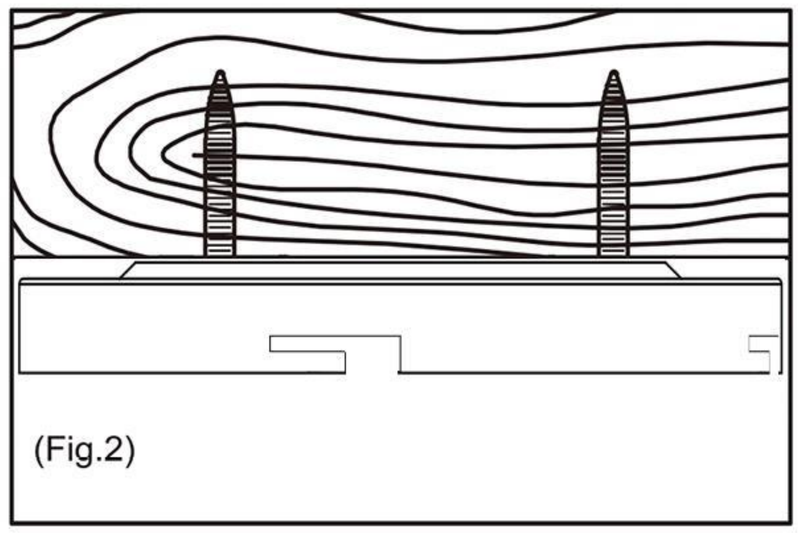

(Fig.2)

NOTE: Hanger after the installation must be able to withstand the weight of 45 kgs or more.

INSTALLING RECEIVER

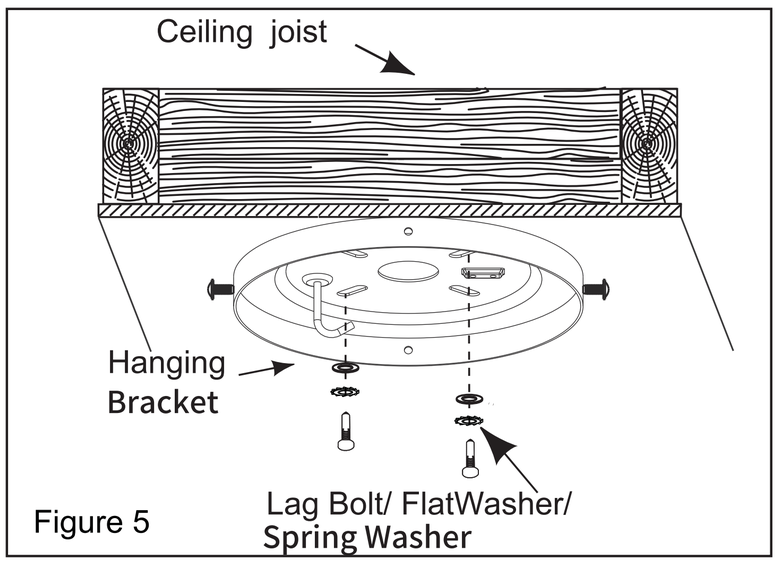

Figure 5

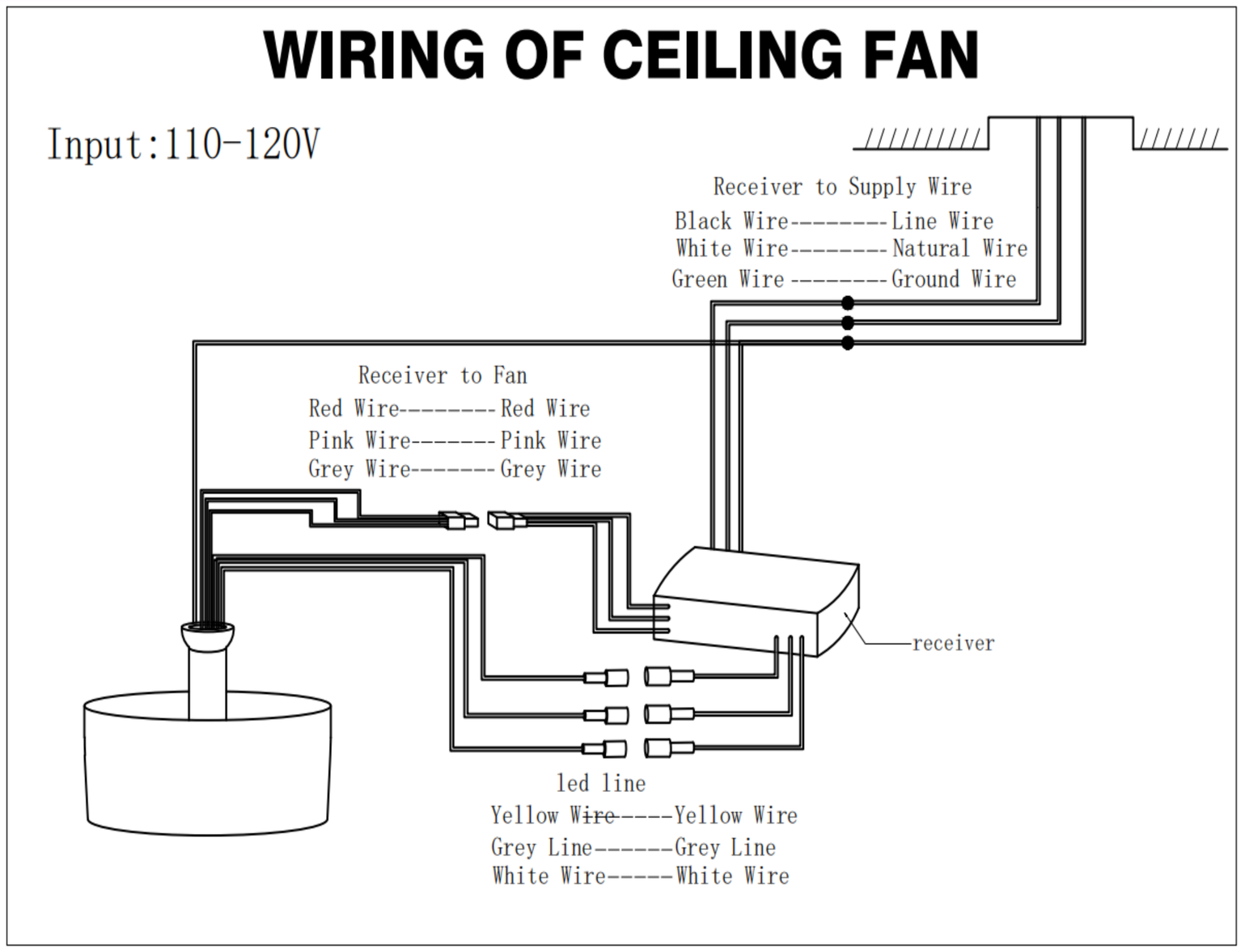

Installing fan blades

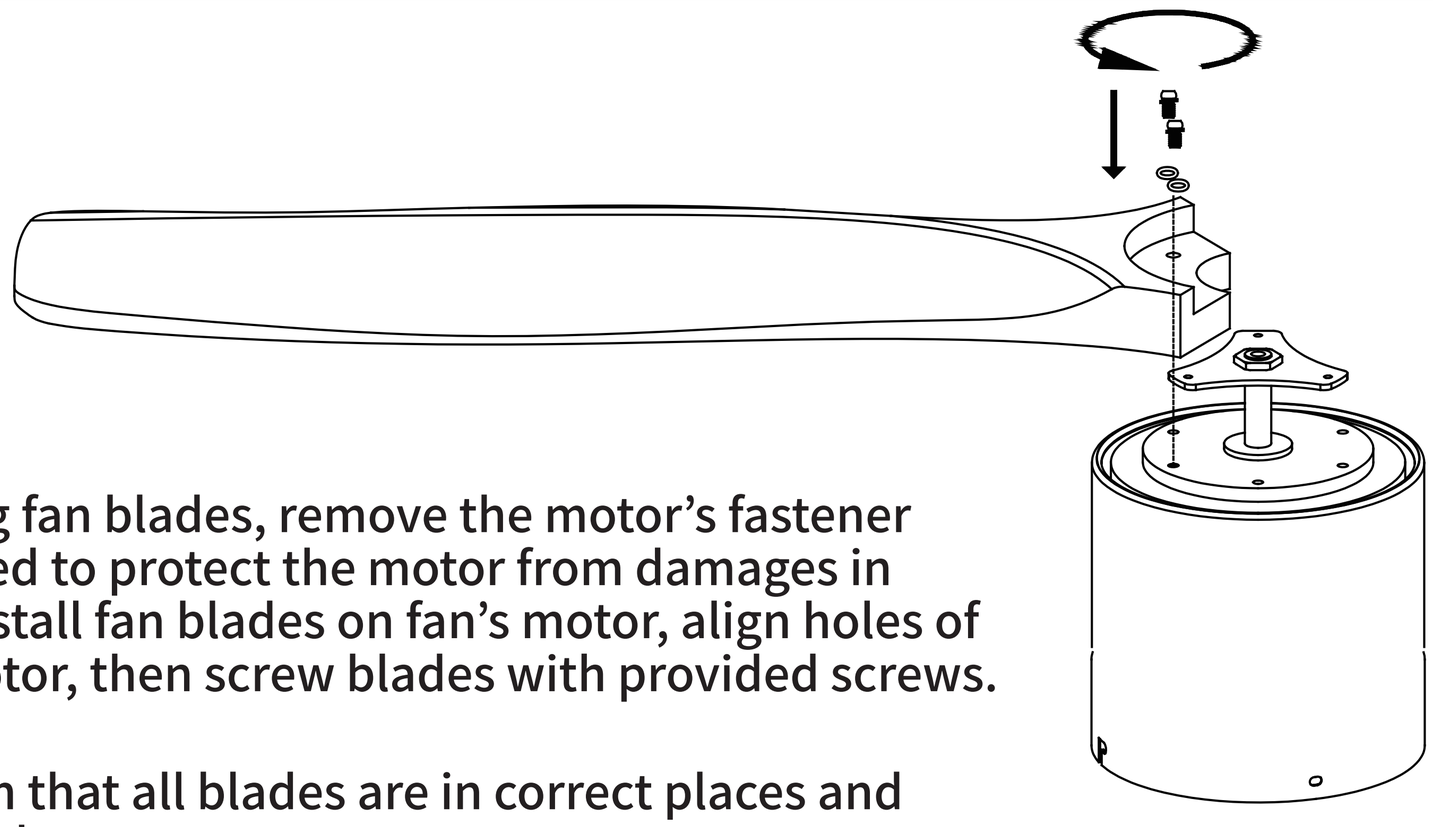

Before installing fan blades, remove the motor's fastener that is only used to protect the motor from damages in transit then install fan blades on fan's motor, align holes of blades and motor, then screw blades with provided screws.

Please confirm that all blades are in correct places and tightly screwed.

Installing Lamp

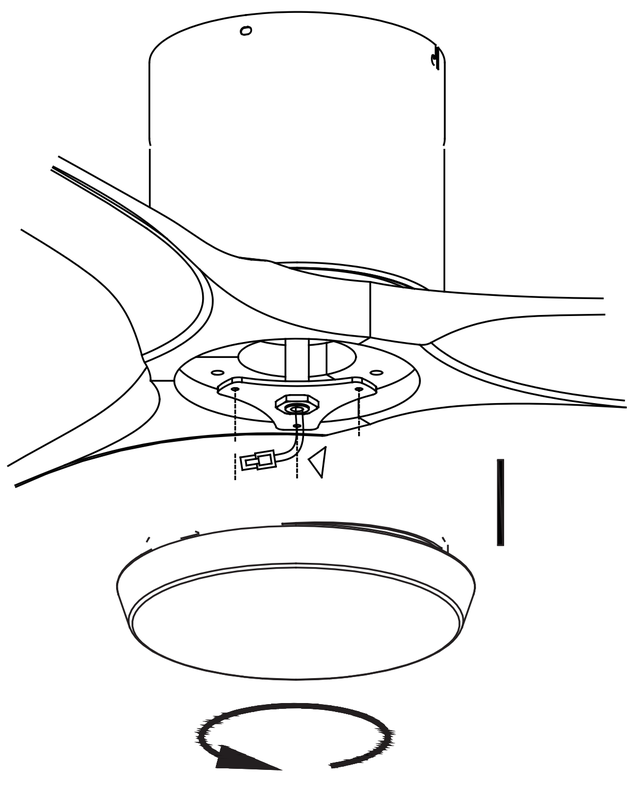

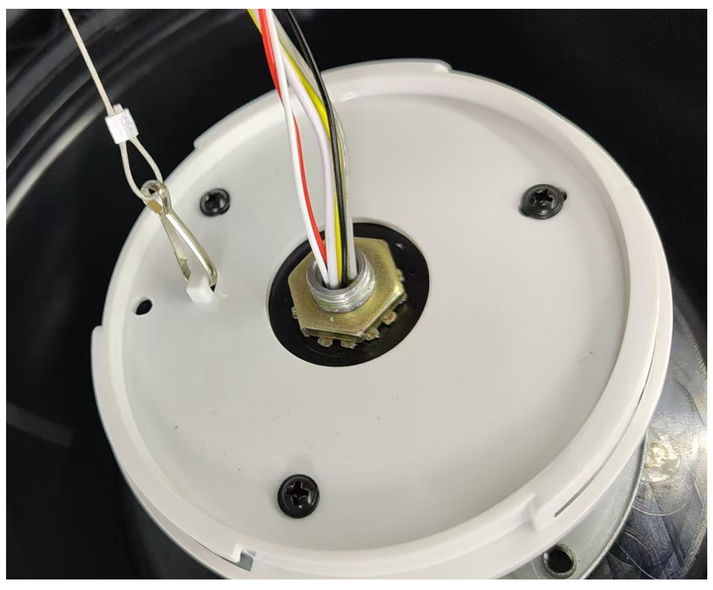



be careful!
The steel wire rope should be hung on the corresponding hole position

1.Remove the screws on the motor plate first.

2.Align the hole on the light board to the motor plate.

3.Make the light plug on from the motor come through the central hole on the box.

4.Insert the screw sand tighten them to secure the motor plate

5.Connect the plugsand adopt the LED board to the light box.

6.position the cover inside light cup and rotate until secure.

Operating instructions

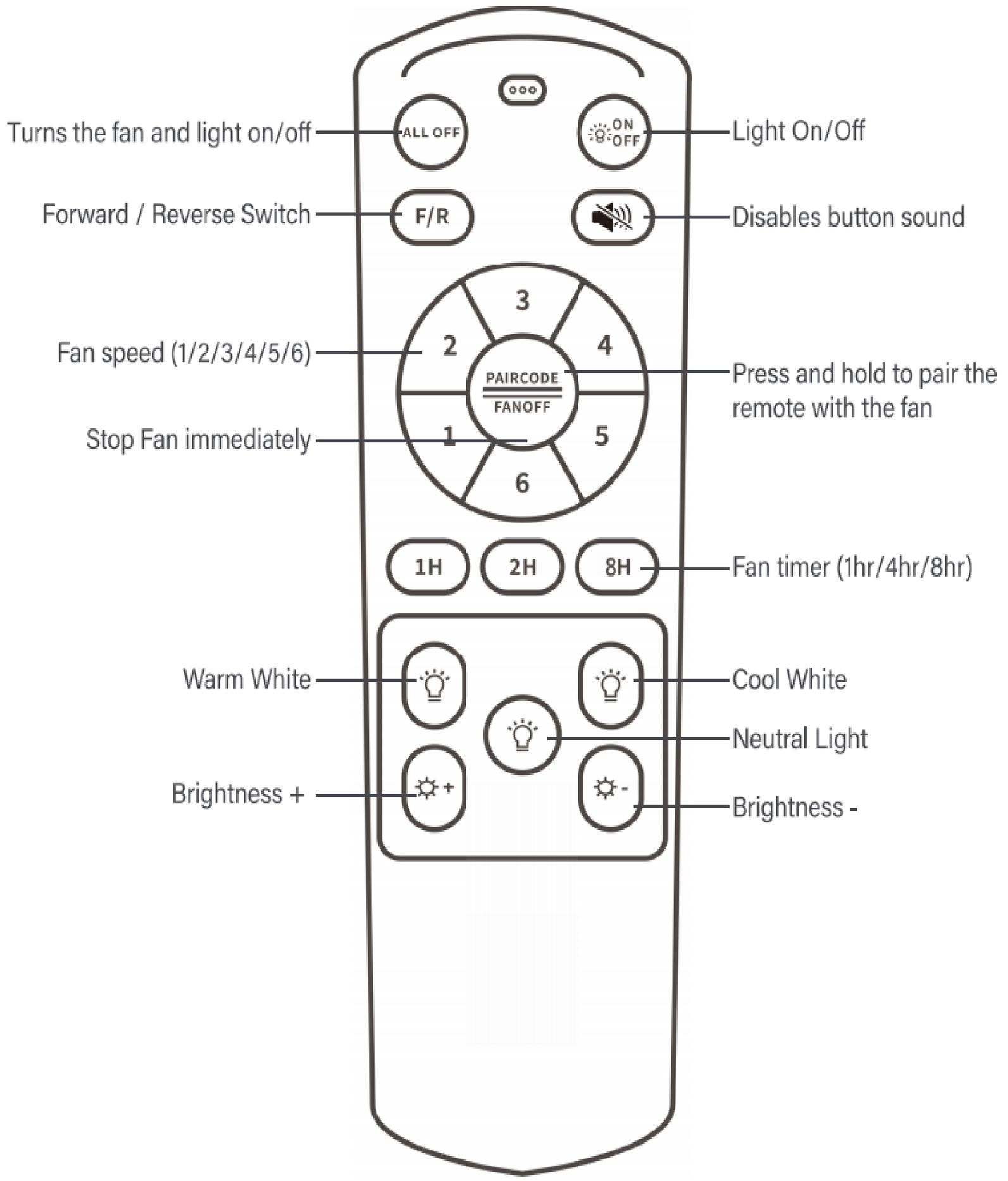

Using AAA 1.5V x2 battery

When the remote control cannot control the fan light, you can use the following method to code:

first turn off the power switch (wall or main switch), then turn it back on after 10 seconds. Once you see the light on, immediately press and hold the "FAN OFF" button on the remote control for 5 seconds to start the fan.

REMOTE CONTROL - APP

1) Scan the below Barcode

2) Select the browser to open the download link

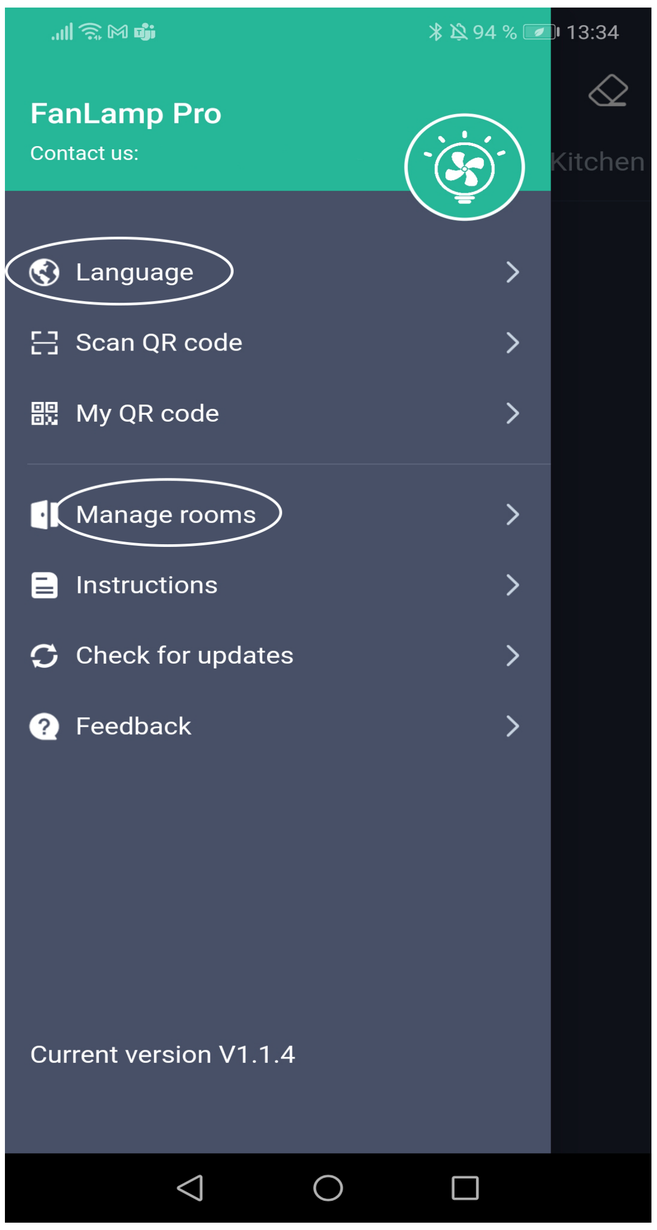

3) Choose Language and set room information

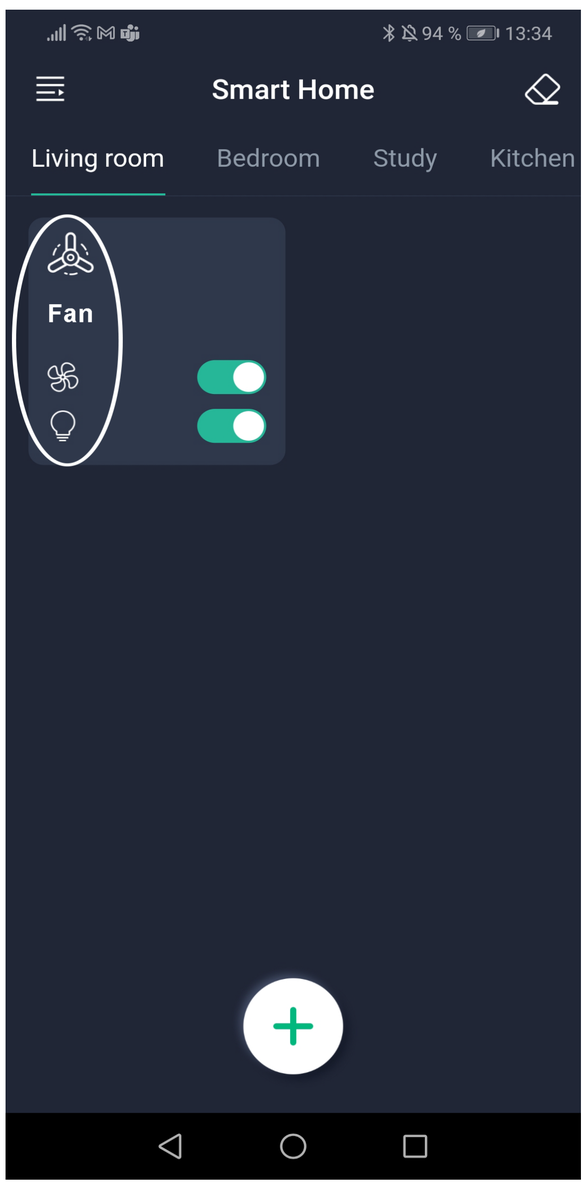

4) Enter Room interface and click the fan control interface into main control interface

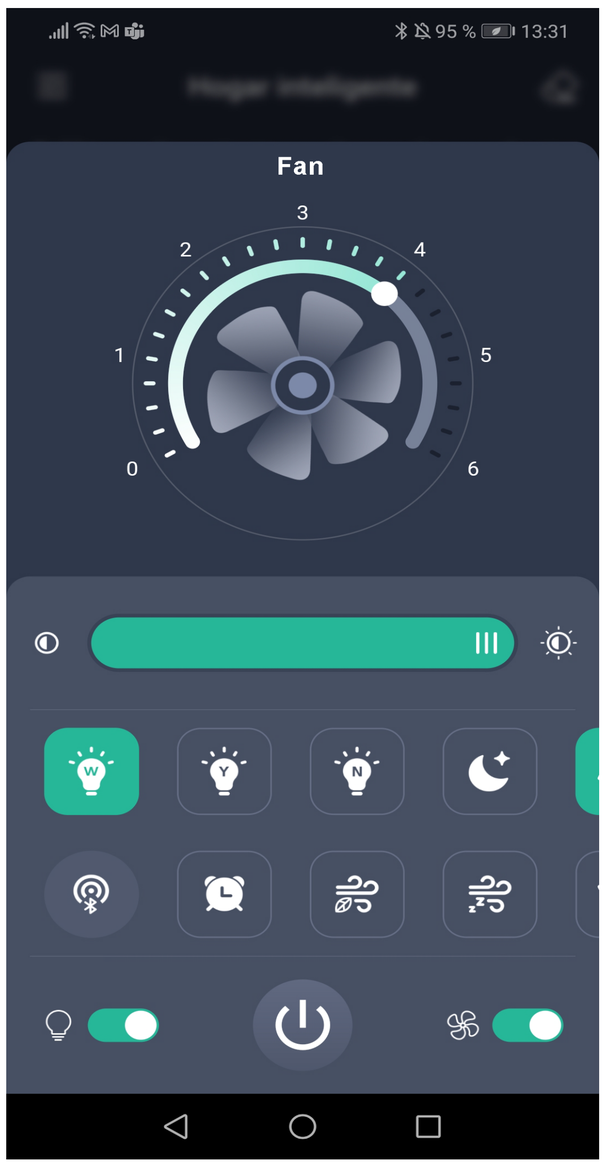

5) Enter the main control interface

6) Open the Bluetooth setting from smart phone, Smartphone is waiting to connect the new blue tooth device;

Click this code button

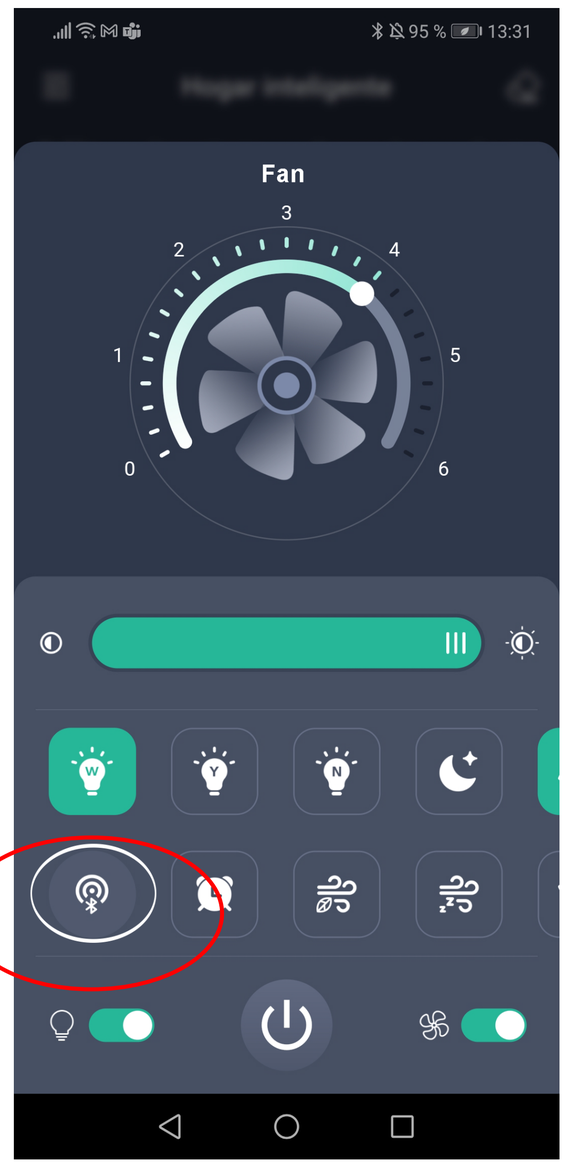

7) “OFF” the electric power supply firstly.

8) Then " turn on" the power again and quickly click on the code check button 5 times,

9) The pair button is in green, the Bluetooth device of Fan lamp had been connected with Smart phone, App could control the Fan lamp now;

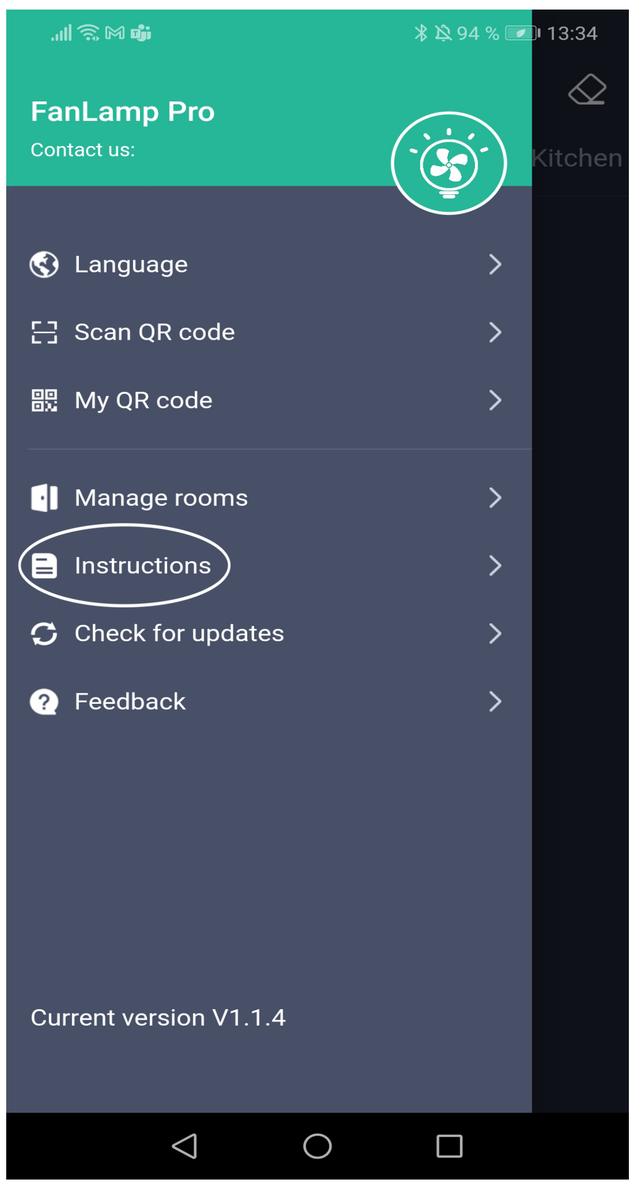

10) Follow APP's below instructions to operate the fan lamp ;

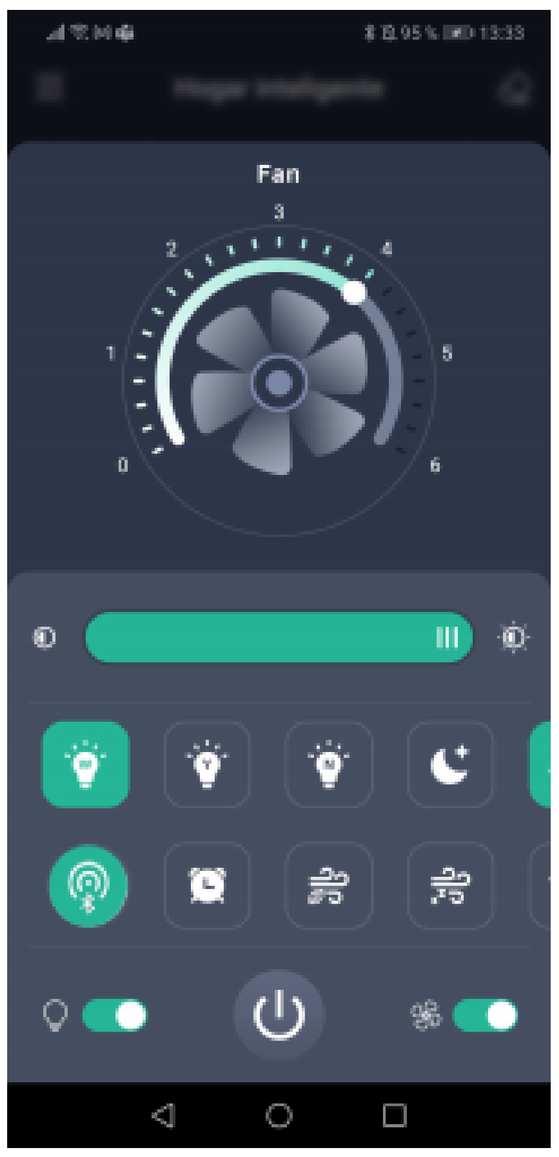

11) Only one device can be paired. Once a new device is paired, the previous device will no longer