LOS FLEXI

CRAFTING YOUR HOME STORY

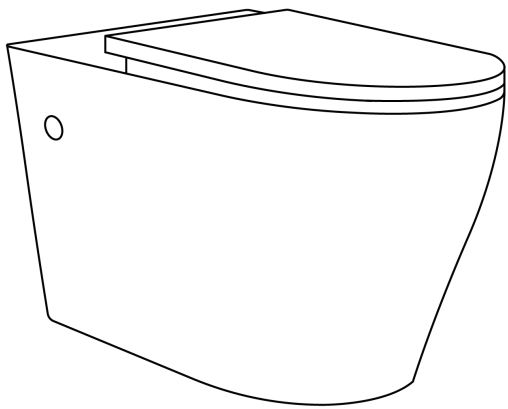

Elongated Wall-Hung Toilet

INSTALLATION & CARE GUIDE

www.losflexi.com *cs@losflexi.com* *(+1) 626-866-3163*

PRIOR TO INSTALLATION:

GET READY TO TRANSFORM YOUR BATHROOM!
INSTALLING YOUR LOS FLEXI TOILET

Hello, DIY Champion!
Before you embark on the exciting journey of installing your sleek Los Flexi toilet, let's ensure you're fully equipped to tackle this task with finesse.
We're here to guide you through this process with clear and user-friendly instructions, making it as easy as a warm handshake.

Before You Dive In:

- Take a moment to peruse these instructions, ensuring you have the right tools and materials on hand. This step is your secret weapon to success.
- Give your new Los Flexi toilet a quick once-over to make sure it's in perfect condition after its voyage to your home. We want it to shine as brilliantly as it's designed to.
- Show your commitment to following the plumbing and construction regulations in your area. We're all about keeping things on the up-and-up.
- Bid farewell to your old toilet. Trust us; this upgrade will redefine your bathroom experience!

Here's a valuable tip: Ensure that your water supply pressure meets or exceeds a minimum of 35 PSI (2.5 kg/cm²). This is the power your new toilet needs to deliver peak performance. No pressure, no performance, right?

- Give that mounting surface a little love – cleanliness and levelness are the keys to a comfortable seat for your toilet.

You're all set, bathroom virtuoso! Get ready to transform your bathroom intothe talk of the town. Remember, we're just a message away if you require anyassistance. Now, go ahead and install that Los Flexi toilet like the superstar you are!

Toilet Regards,
The Los Flexi Team

HIGH-RESOLUTION DIGITAL MANUAL

INSTALLATION VIDEO

TOOLS AND MATERIALS REQUIRED (not supplied)

Screwdriver

Tape Measure

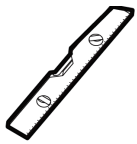
Level

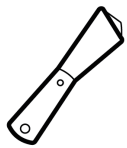
Putty Knife

Wrench

Safety Glasses

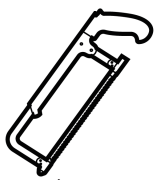
Hacksaw

Flexible Supply Tube

INCLUDED WITH TANK CARRIER SYSTEM (sold separately)

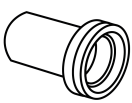
Outlet Pipe

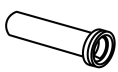
Inlet Pipe

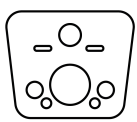
Sound Insulation Pad

PACKAGE INCLUDED:

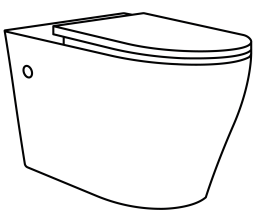
LF01WH01
Wall-Hung Toilet

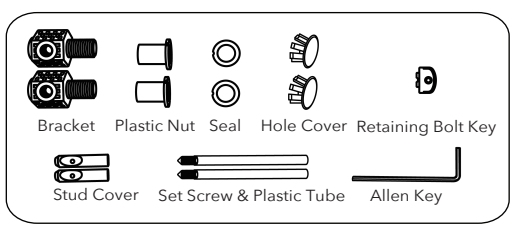

Bowl Accessories

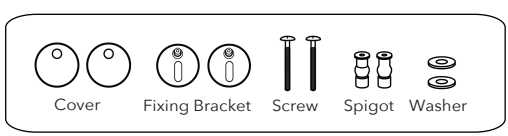

Seat Accessories

PRODUCT DIMENSION (Inch)

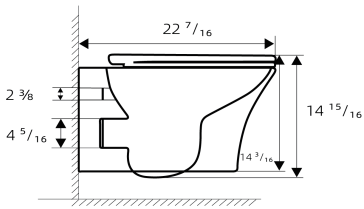

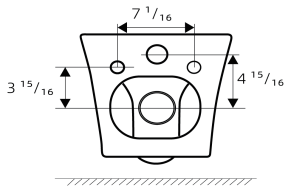

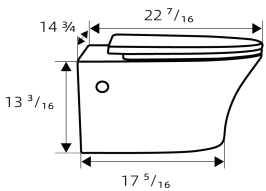

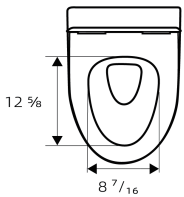

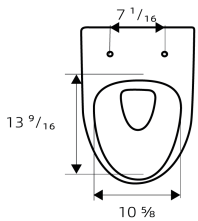

1. Install Tank Carrier System

Before you start installing your wall-hung toilet bowl, ensure you have a suitable wood frame and a commercial or residential tank system ready for the job. Follow the manufacturer's instructions for proper installation.

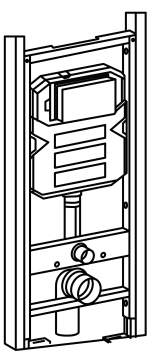

2. Dry Fit Outlet Pipe and Inlet Pipe

Begin by fully inserting the inlet pipe into the cistern's flushing outlet. Connect the outlet pipe into the discharge outlet. Mark the desired location on your finished wall for each pipe, as illustrated below.

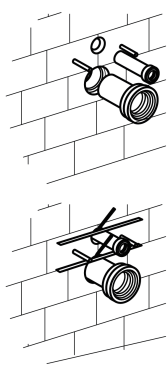

3. Determine Pipe Length

Apply lubricant to the rubber washers on the inlet pipe and outlet pipe. Insert them into the corresponding holes. Make sure to mark the pipes for reference,as shown in the diagram.

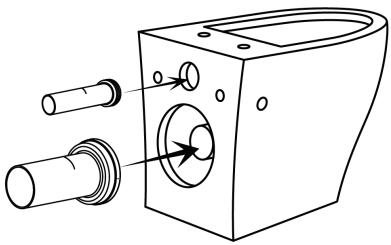

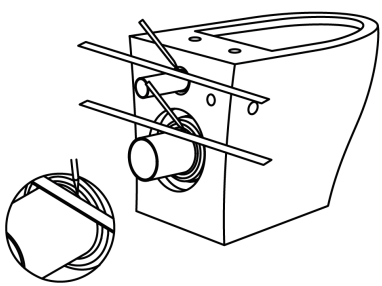

4. Cut Pipes

Measure the distance between the marked lines on the pipes (L1 & L2). Deduct this measured distance from the unmarked end of the pipe, then add an extra 1/8″, and carefully cut the pipes according to this adjusted length. After cutting, use a file to remove any burrs and consider beveling the pipe edge.

L1: The distance between the two lines on the inlet pipe.

L2: The distance between the two lines on the outlet pipe.

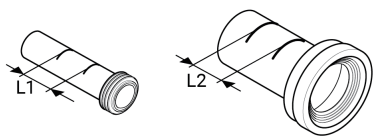

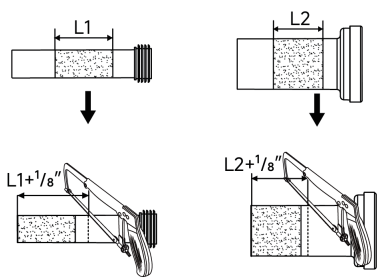

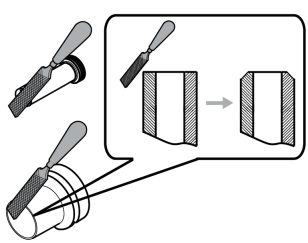

5. Adjust Mounting Stud and Install Pipes

Apply lubricant to the joint surfaces of both the inlet and outlet pipe. Then, adjust the length of the mounting studs to D+$^{11}/_{16}$″ as shown. Finally, install the sound insulation pad and insert both pipes into the wall hubs.

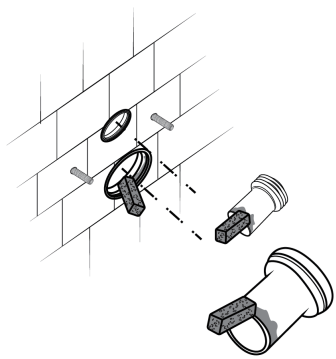

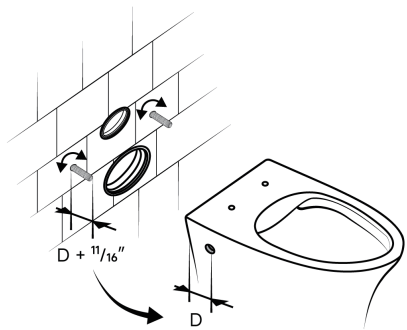

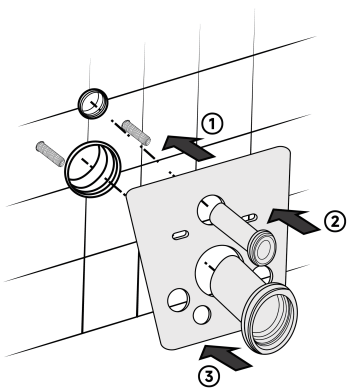

Sound insulation pad is optional or required.

6. Level and Attach the Bowl

Install with mounting hardware and ensure toilet bowl is level, then cover the side hole with the included hole covers.

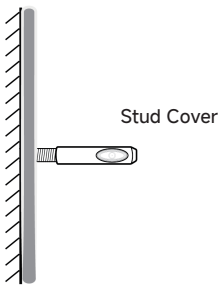

① Screw in the stud cover

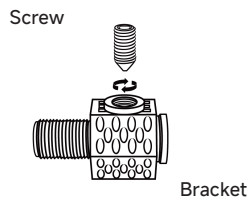

② Insert the screw into the bracket hole

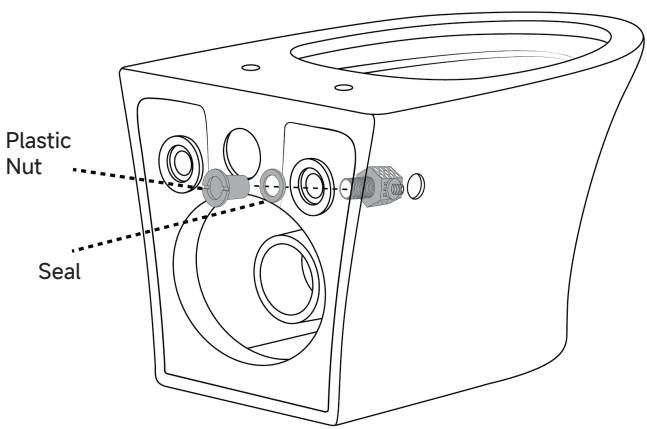

③ Insert the bracket into the bowl mounting hole and secure with seal and plastic nut

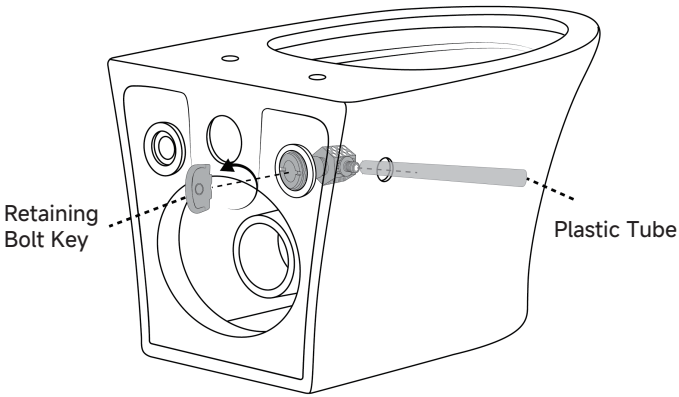

④ Tighten using the retaining bolt key
Insert the plastic tube into the side hole

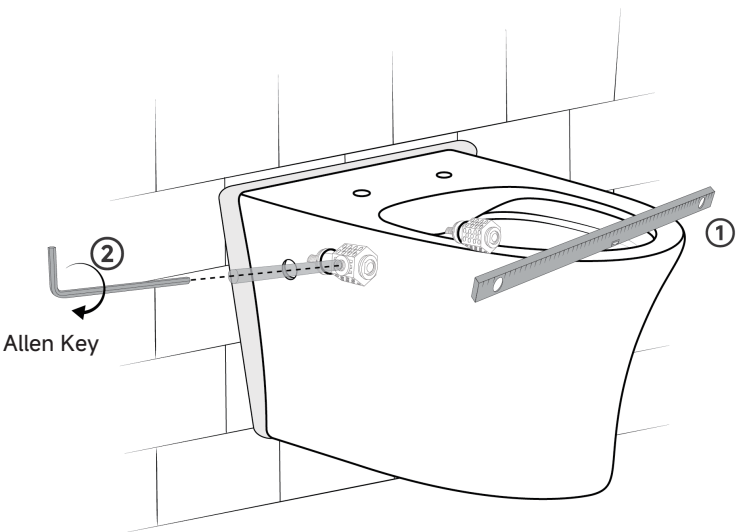

⑤ Install the toilet onto the mounting stud, making sure it is level, then tighten with the allen key

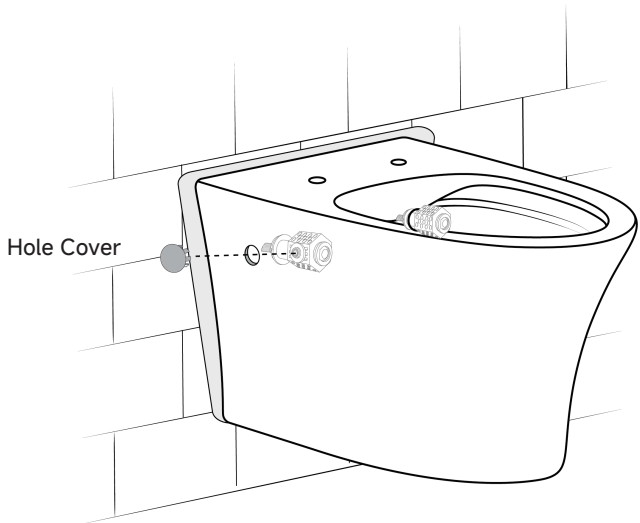

⑥ Install the hole cover

If there are any gaps between the bowl and the wall, fill them with cement or a suitable sealant to complete the installation.

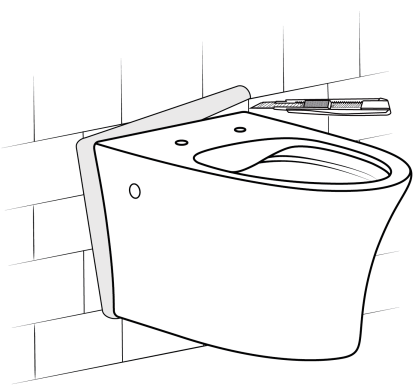

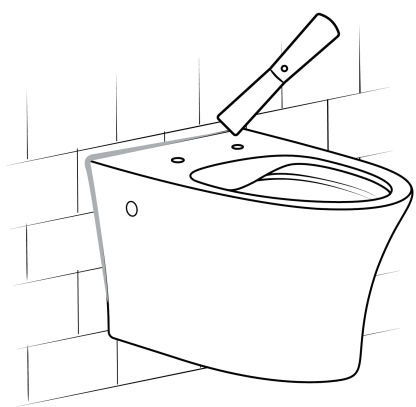

TOILET SEAT INSTALLATION

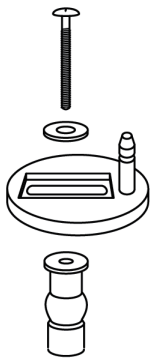

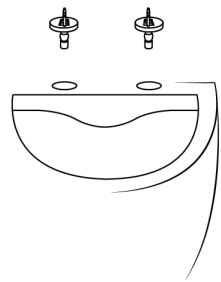

1

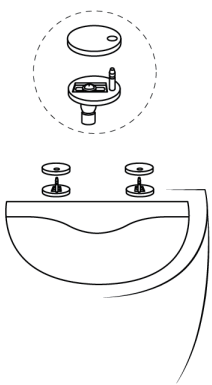

2

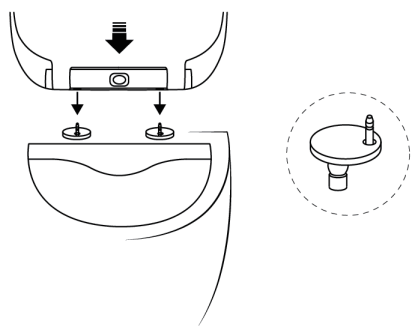

3

PRODUCT CLEANING & CARE

- Do not use in-tank cleaners in your toilet. Products containing chlorine can seriously damage fittings in the tank. This can cause leakage and damage.
- Do not use cement while installing toilet.
- Wipe surfaces clean and rinse completely with water immediately after applying cleaner. Rinse and dry any overspray that lands on nearby surfaces. Do not allow cleaners to soak on surfaces.
- Use soft, dampened sponge or cloth. Never use abrasive materials such as hard-bristle brushes or scouring pads to clean surfaces. Use of any abrasive materials may damage the porcelain glaze.

IMPORTANT CONSUMER INFORMATION

Consumer Responsibilities

- If you live in a hard water area, make certain that the holes in the toilet rim are kept clean to ensure proper bowl flushing.
- Toilet bowl cleaners should be used at least once a week.
- Use a long-handled brush to clean the rim holes and to clean as far into the trap as possible to prevent mineral deposits from forming.
- Most toilet bowl cleaners are not harmful to the vitreous china surface of the toilet bowl. Please follow the bowl cleaning instructions carefully.

WARNING

- DO NOT USE ABRASIVE CLEANERS OR SOLVENTS.
- DO NOT USE ANY CEMENT WHILE INSTALLING THE TOILET
- Expansion due to heat may damage the base of the toilet. Los Flexi will not be responsible for any heat damage.
- Do not throw material into the toilet can easily clog such as newspaper, paper towels, or sanitary napkins.
- Take care not to strike vitreous china with force to prevent damage and leaks.
- Do not use the toilet with water below 0°C (32°F).

LIMITED WARRANTY COVERAGE

TWO YEAR LIMITED WARRANTY
Los Flexi products are crafted with superior materials and impeccable workmanship, offering our customers reliable and long-lasting products. If defects in materials or craftsmanship are detected under standard use within the first two years of installation, Los Flexi will either supply replacement parts at no charge or, if deemed necessary, replace the product or its parts. This warranty is exclusive to the original purchaser, and proof of purchase is mandatory for any claim.

- This Warranty Will Be Voided If:
- The product's installation did not follow our recommendations.
- The product was relocated from its initial installation site.
- The product underwent any modifications from its original condition.
- The product suffered from neglect, misuse, chemical overuse, accidents, or any other damages.

Los Flexi does not imply that our products adhere to local building or plumbing codes. Consumers must ascertain local code compliance before and during installation. This warranty is strictly for the original purchaser and first consumer.

Los Flexi won't be held responsible for any consequential damages linked to the product's installation, replacement, return, or usage. This includes, but is not limited to, freight charges, labor, downtime, home damages, and other associated costs (e.g., professional services, investigations, audits, legal fees).

This Los Flexi warranty clearly delineates our liability. Items not specified in this warranty fall outside MaceratingFlo's responsibility. In states with variations concerning implied warranties, our compliance is ensured.

For any queries or concerns, feel free to reach out to us at

Email: cs@losflexi.com
Phone: (+1) 626-866-3163
Site: www.losflexi.com