Modular Storage System

Klein Tools MODbox™ Modular Storage System is designed for tradespeople who need customizable, durable, and easy-to-transport storage. With stackable tool boxes, rolling bases, and quick-connect accessories, this series adapts to any jobsite. Built tough for heavy-duty use, MODbox™ keeps tools secure, organized, and ready to go.

Spring-loaded latch provides quick tool access and one-handed lid operation

Case-compatible lid includes V-groove and molded-in ruler for cutting & measuring

Built-in side rails accept MODbox™ attachments for expansion

MODbox™ Tall Component Box, Half-Width
54500MBX

MODbox™ Tall Component Box, Full-Width
54400MBX

MODbox™ Small Toolbox
54300MBX

MODbox™ Medium Toolbox
54200MBX

MODbox™ Rolling Toolbox
54100MBX

Cat. No.	UPC	Description	Dimensions
54100MBX	0-92644-54056-1	MODbox™ Rolling Toolbox	H: 27" (68.6 cm) L: 22" (55.9 cm) W: 20.8" (52.7 cm)
54200MBX	0-92644-54057-8	MODbox™ Medium Toolbox	H: 12.1" (30.7 cm) L: 22" (55.9 cm) W: 16.1" (40.9 cm)
54300MBX	0-92644-54058-5	MODbox™ Small Toolbox	H: 7.5" (19.0 cm) L: 22" (55.9 cm) W: 16.1" (40.9 cm)
54400MBX	0-92644-54059-2	MODbox™ Component Box, Full Width	H: 5.2" (13.2 cm) L: 22" (55.9 cm) W: 15.7" (40.0 cm)
54500MBX	0-92644-54060-8	MODbox™ Component Box, Half Width	H: 5.2" (13.2 cm) L: 10.9" (27.6 cm) W: 15.5" (39.3 cm)

IMPACT RESISTANT POLYMERS

IP65 RATED

See our complete line of MODbox Storage Systems. www.kleintools.com

⚠ Visit www.kleintools.com for warnings.

© 2025 Klein Tools, Inc. • Lincolnshire, IL 60069 • Rev. 09/25 C

MODbox™ Rolling Toolbox
54100MBX

MODbox™ Medium Toolbox
54200MBX

MODbox™ Small Toolbox
54300MBX

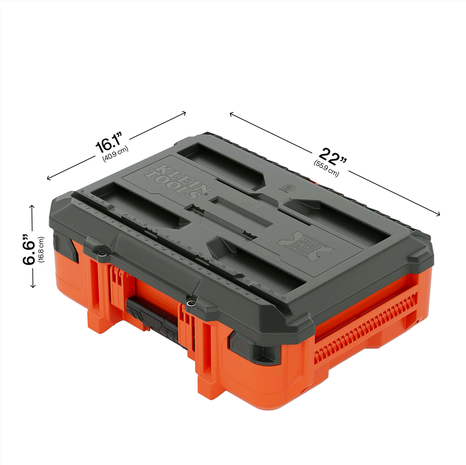

MODbox™ Tall Component Box, Full-Width
54400MBX

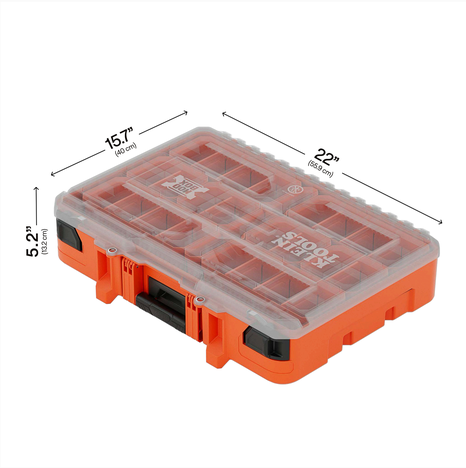

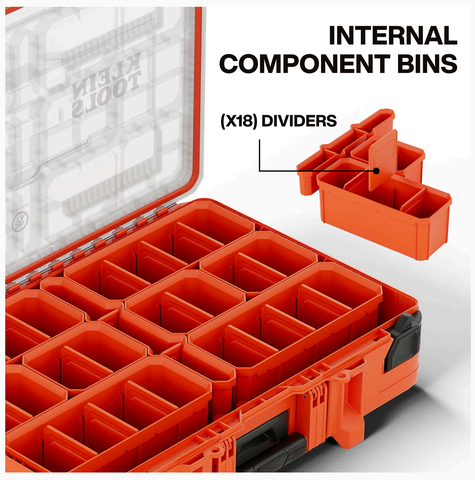

MODbox™ Tall Component Box, Half-Width
54500MBX

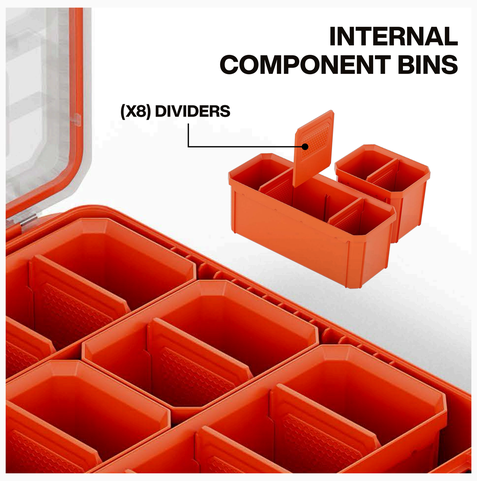

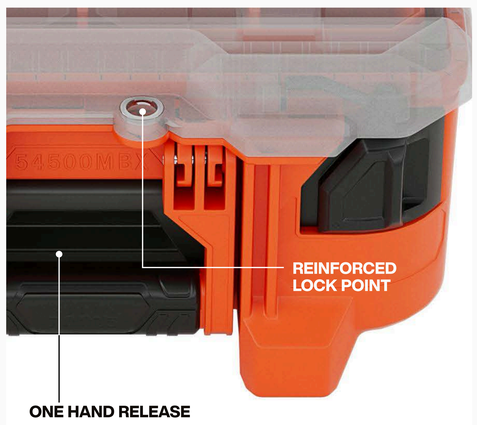

See our complete line of MODbox Storage Systems. www.kleintools.com

⚠ Visit www.kleintools.com for warnings.

© 2025 Klein Tools, Inc. • Lincolnshire, IL 60069 • Rev. 09/25 C