EasyTrim® Reveals

EZ 5 Horizontal Reveal H 5/16" Panel Trim

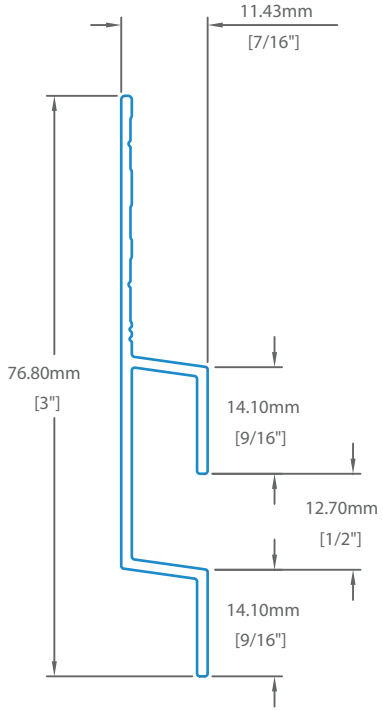

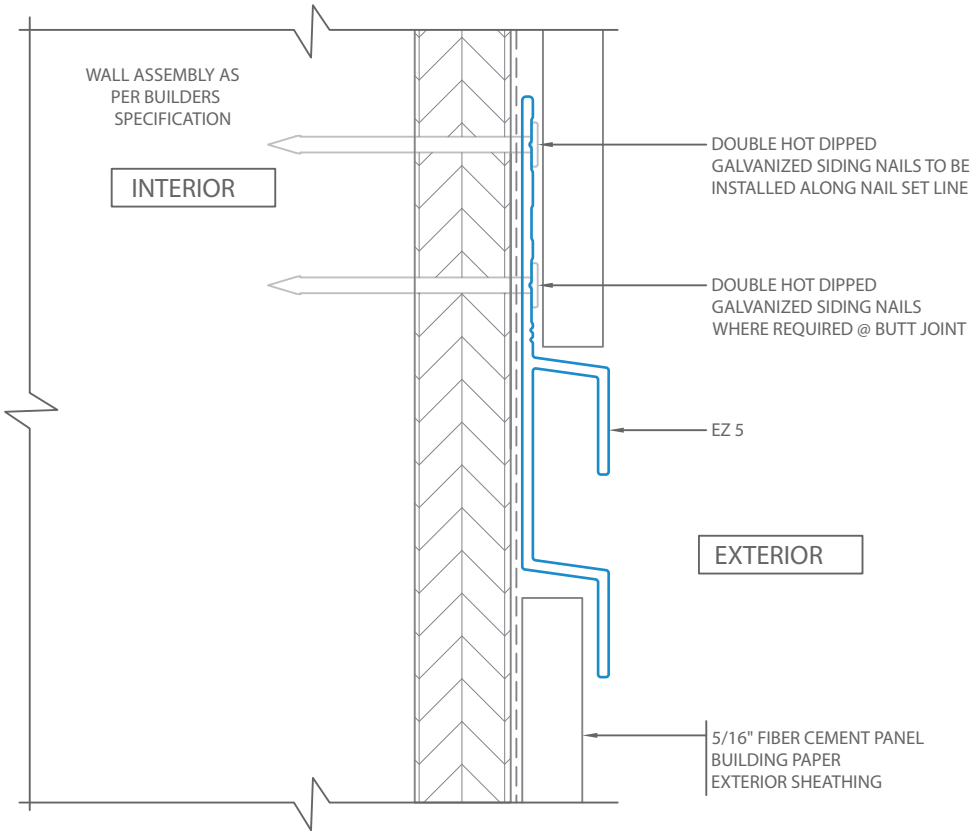

© 2021 Copyright EasyTrim Reveals®. All rights reserved.

EasyTrim® Reveals

EZ 5 Horizontal Reveal H 5/16" Panel Trim with Window Flashing

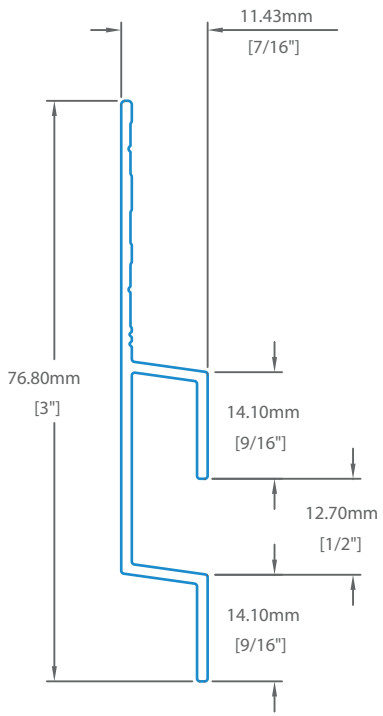

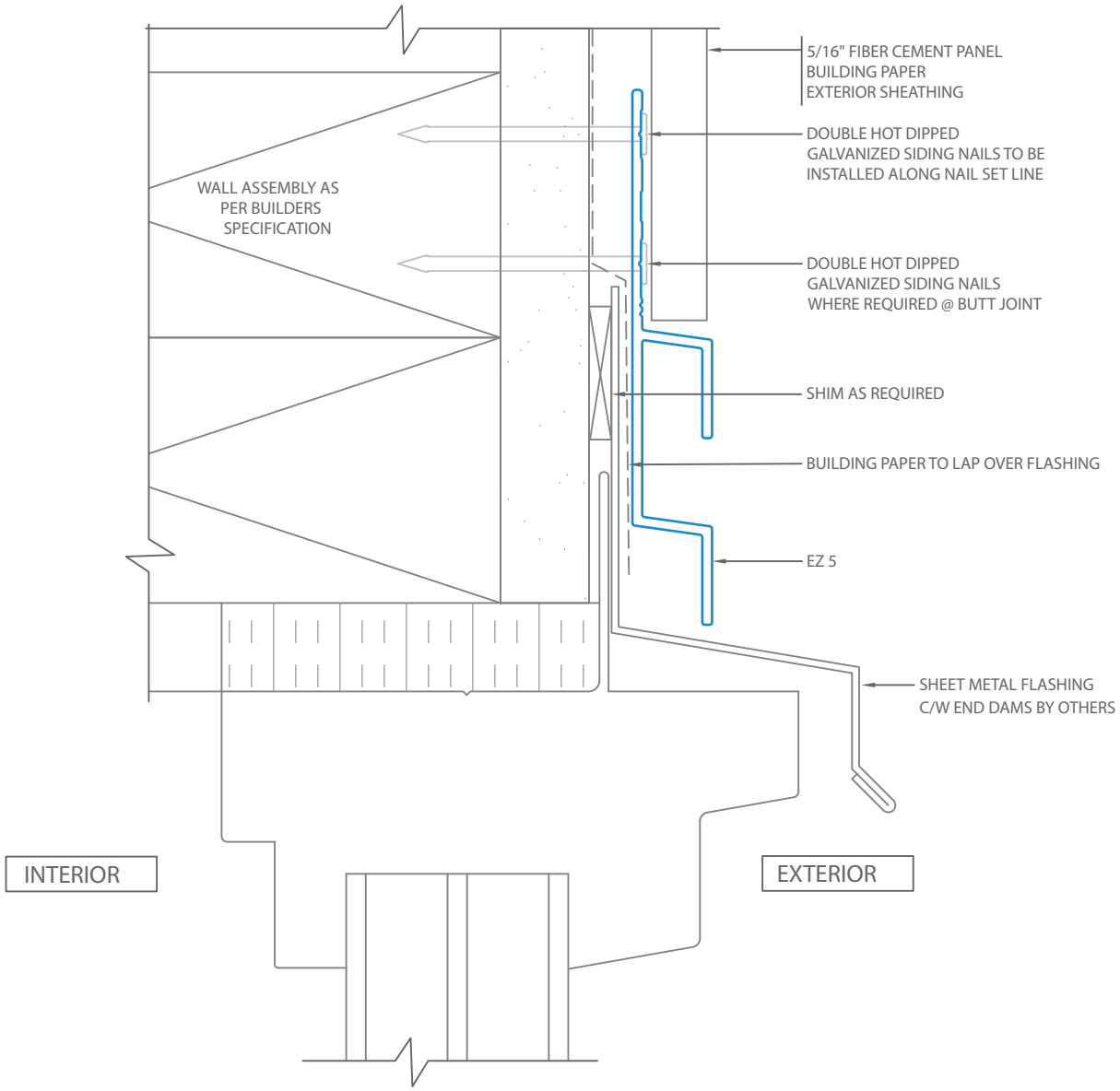

© 2021 Copyright EasyTrim Reveals®. All rights reserved.