Installation Instruction

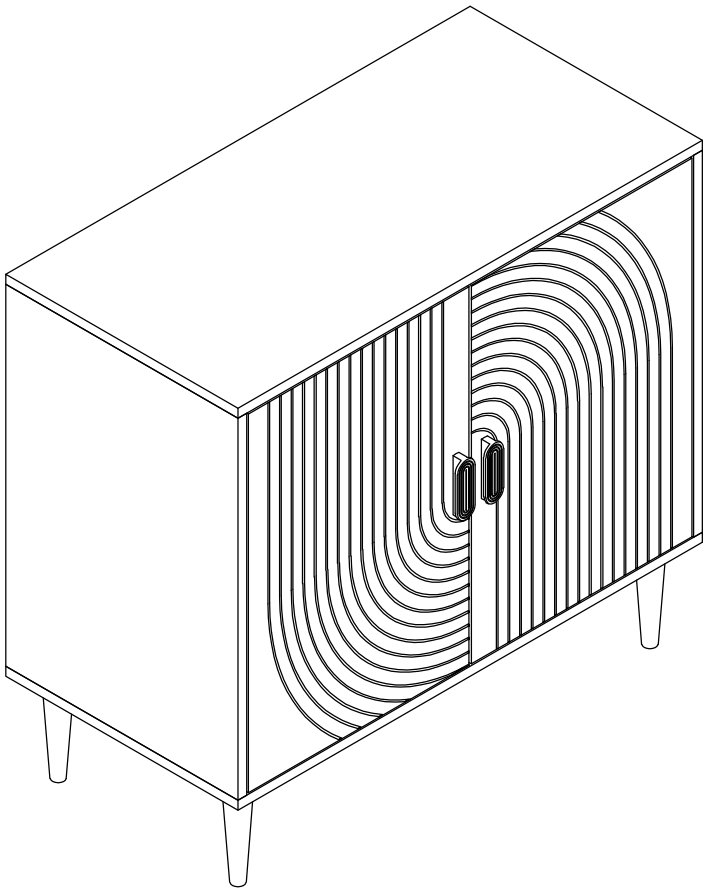

THIS INSTRUCTION BOOKLET CONTAINS IMPORTANT SAFETY INFORMATION. PLEASE READ AND KEEP FOR FUTURE REFERENCE.

If there is any reason for anything missing, damaged, incorrect or different from what you expected, please contact us for Technical Support. In order to improve efficiency, please describe the problem in detail and attach the relevant photos for us to check.Thank you for your understanding!

ASSEMBLY PREPARATION:

1. Remove all packaging materials, staples and packing straps from the carton.
2. Refer to PARTS LIST and HARDWARE LIST and make sure they are complete before you start assembly.
3. Place all parts on a clean, flat and soft surface (e.g. carpet or rug) to prevent parts from getting scratched.

SAFETY PRECAUTIONS:

1. KEEP ALL HARDWARE PARTS OUT OF THE REACH OF CHILDREN.
2. DISPOSE OF PLASTIC PACKAGING MATERIAL IMMEDIATELY TO AVOID ANY RISK OF SUFFOCATION TO CHILDREN OR PETS.

TIPS FOR ASSEMBLY:

1. Allow ample space for assembly and in close proximity to where the product will be placed.
2. Assemble the product on a surface that does not scratch or damage the exterior gloss and finish of the furniture.
3. Please check all of the parts and quantities are included before assembly. If any parts are missing, please contact our customer service.
4. Identify all of the parts, hardware and quantities required for each step.
5. Do not over-tighten any fittings during assembly, as this may cause damage.
6. DO NOT USE POWER TOOLS TO ASSEMBLE THIS PRODUCT.
7. Always place the product on a flat surface.
8. Do not sit or stand on the partially assembled product; only to use the product for which it is intended.

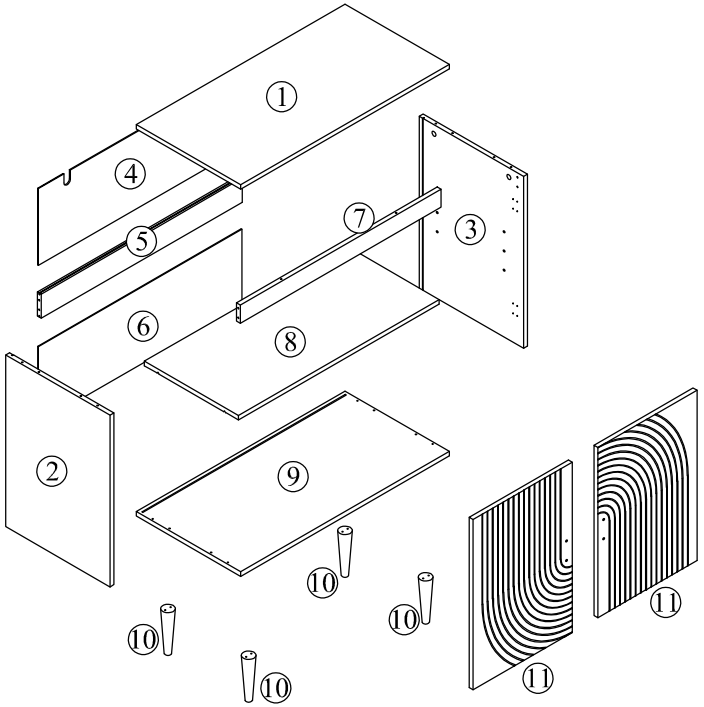

	A	12pcs		I	4pcs
	B	12pcs		J	18pcs
	C	10pcs		K	2pcs
	D	14pcs		L	4pcs
	E	8pcs		M	4pcs
	F	8pcs		N	4pcs
	G	24pcs		O	2pcs
	H	4pcs		P	2pcs

STEP 1

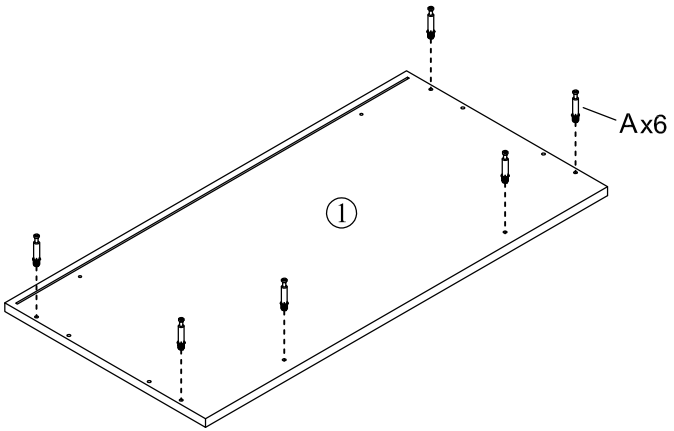

A		6pcs

STEP 2

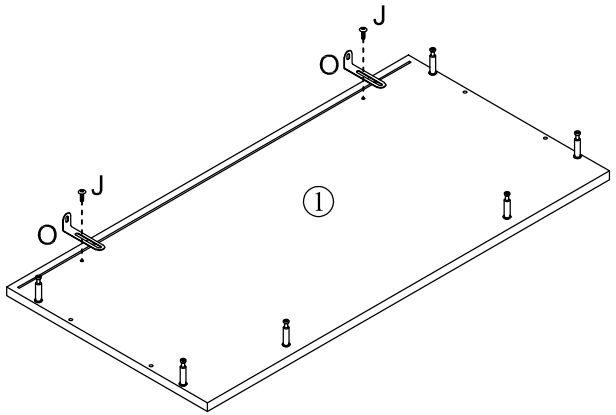

J		2pcs
O		2pcs

STEP 3

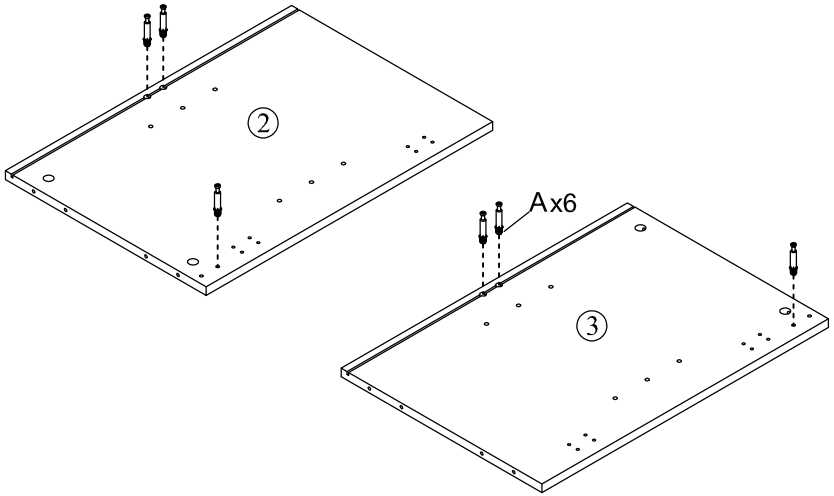

A		6pcs

STEP 4

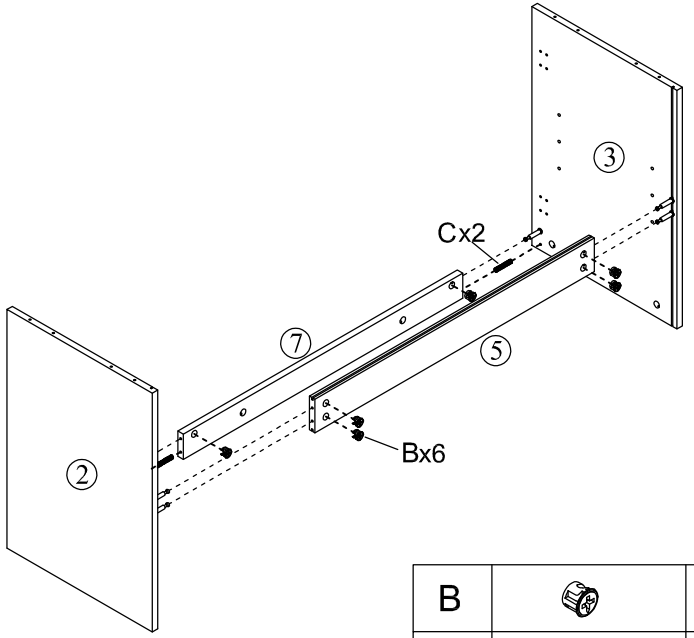

B		6pcs
C		2pcs

STEP 5

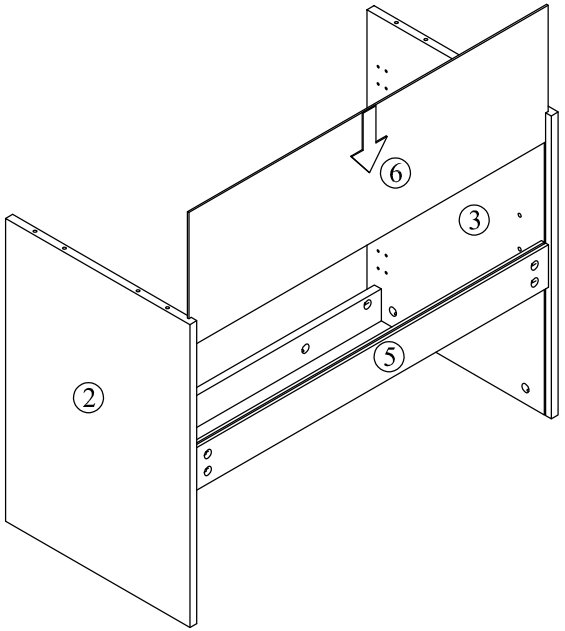

STEP 6

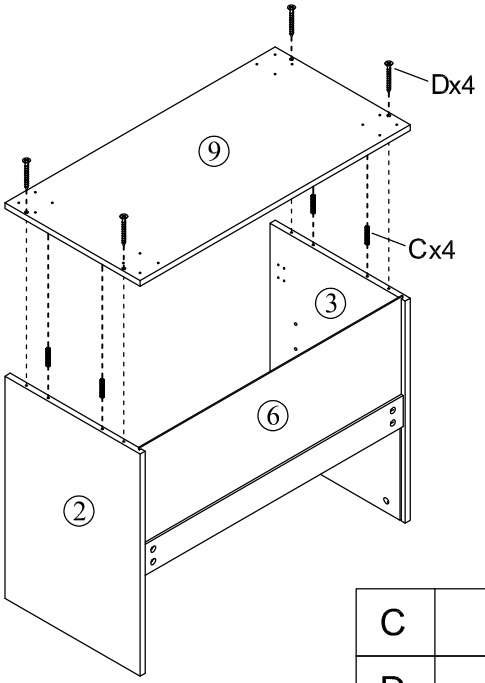

C		4pcs
D		4pcs

STEP 7

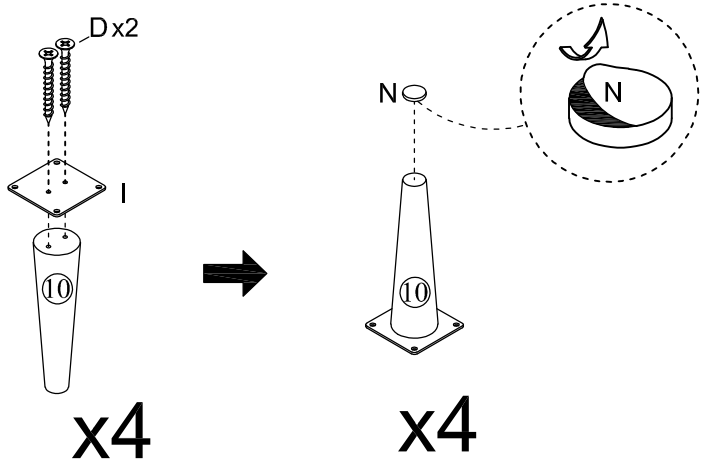

D		8pcs
I		4pcs
N		4pcs

STEP 8

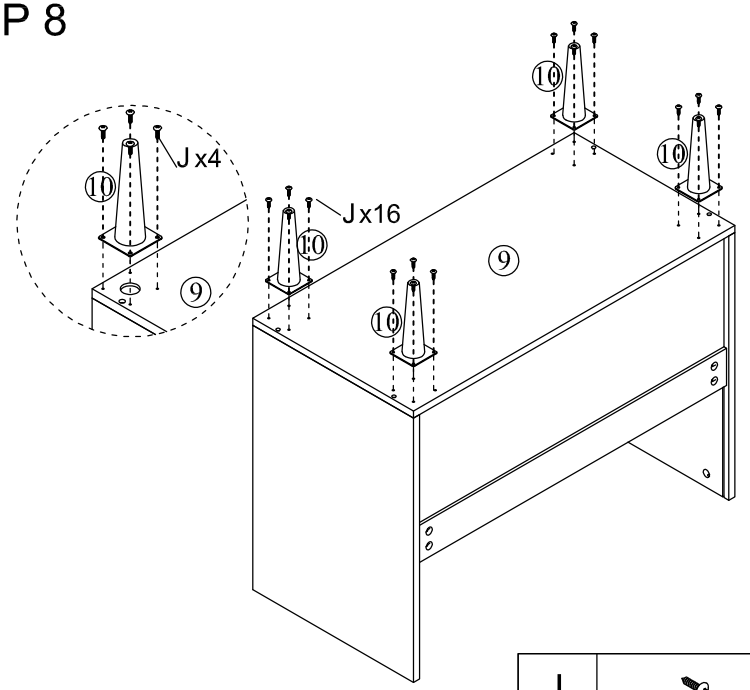

J		16pcs

STEP 9

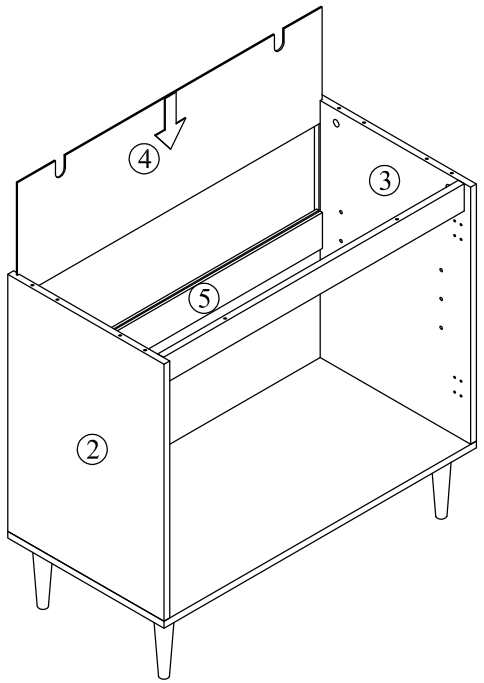

STEP 10

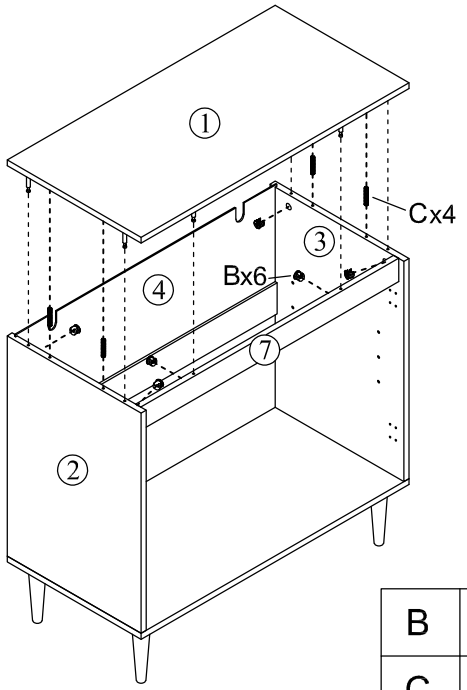

B		6pcs
C		4pcs

STEP 11

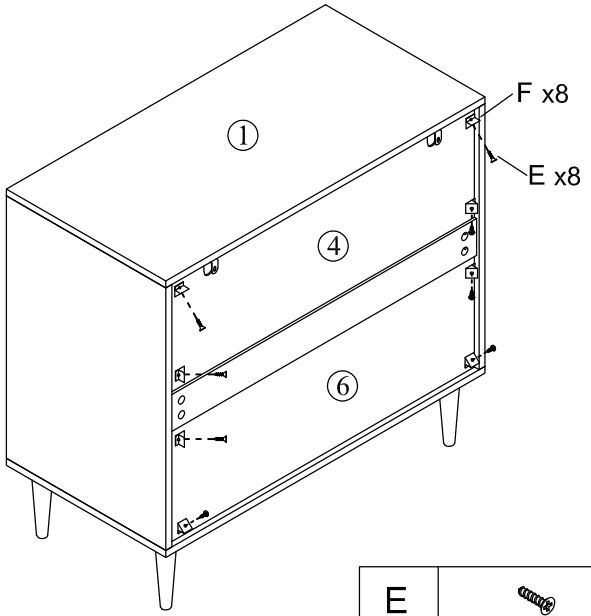

E		8pcs
F		8pcs

STEP 12

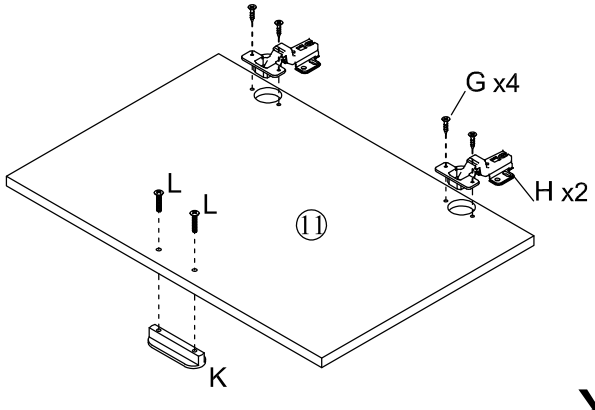

x2

G		8pcs	K		2pcs
H		4pcs	L		4pcs

STEP 13

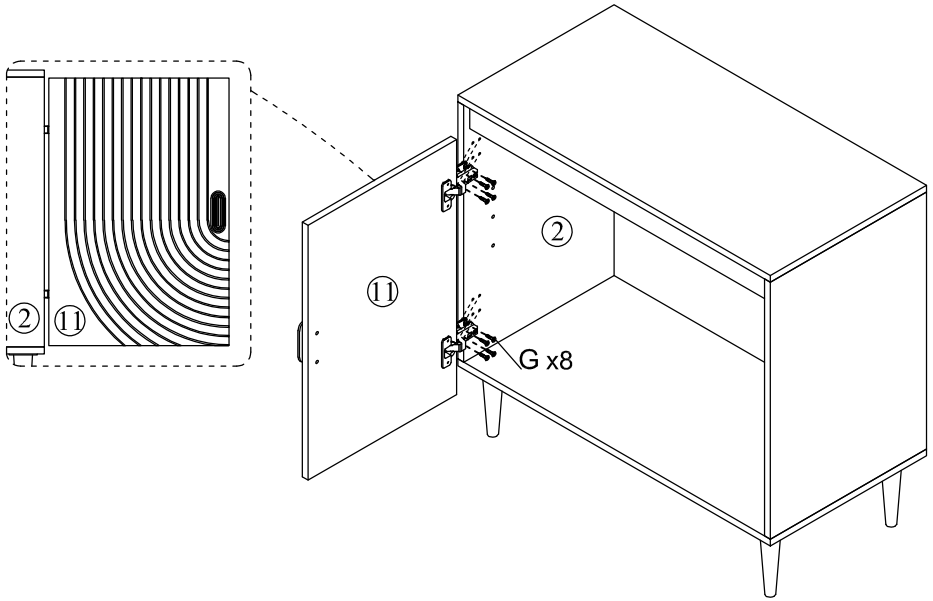

G		8pcs

STEP 14

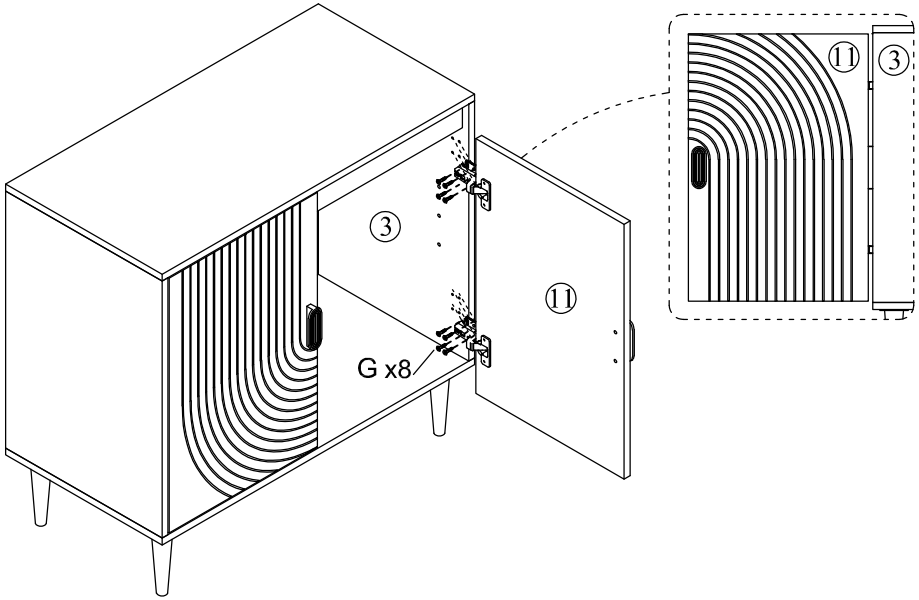

G		8pcs

STEP 15

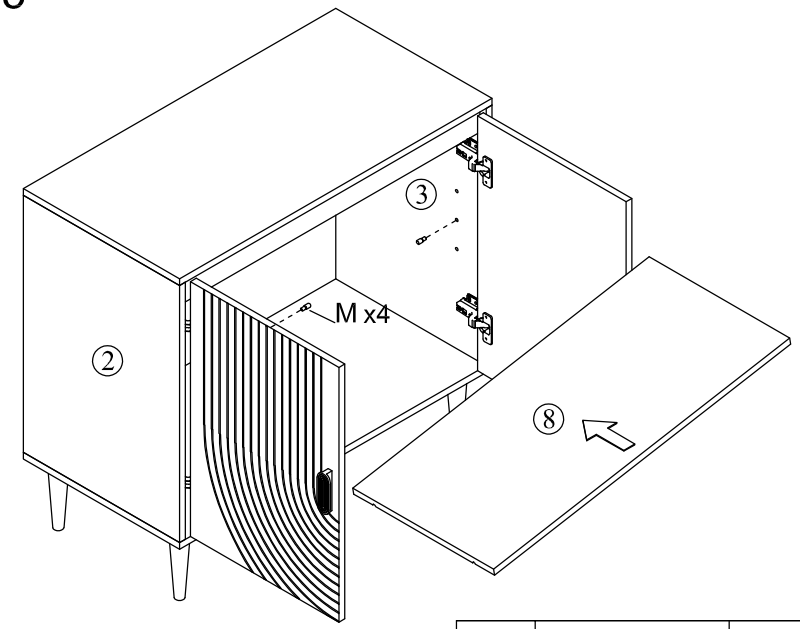

M		4pcs

STEP 16

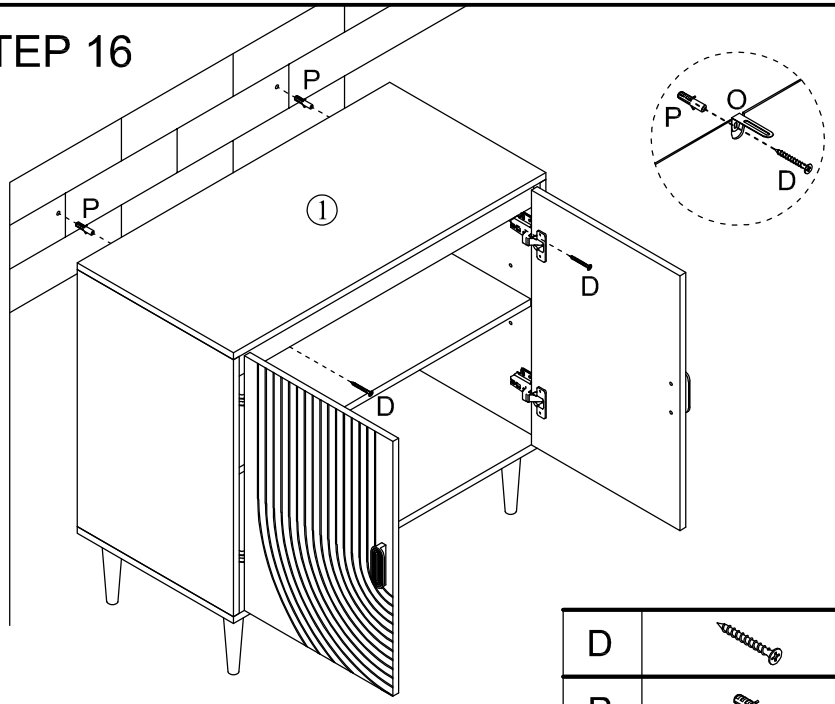

D		2pcs
P		2pcs

STEP 17

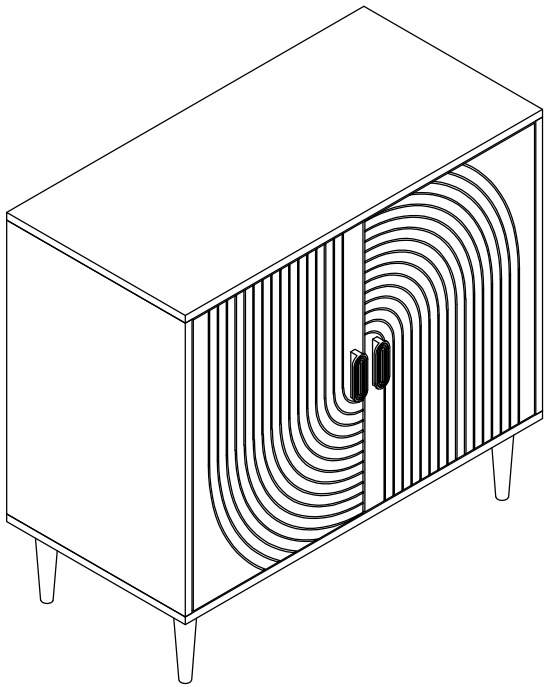

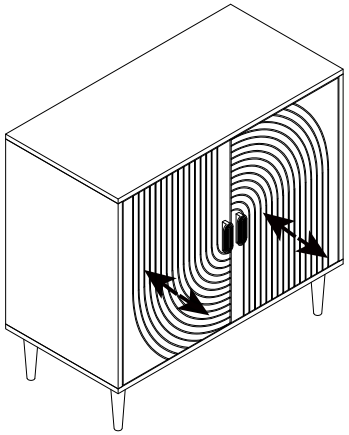

Move the door in and out

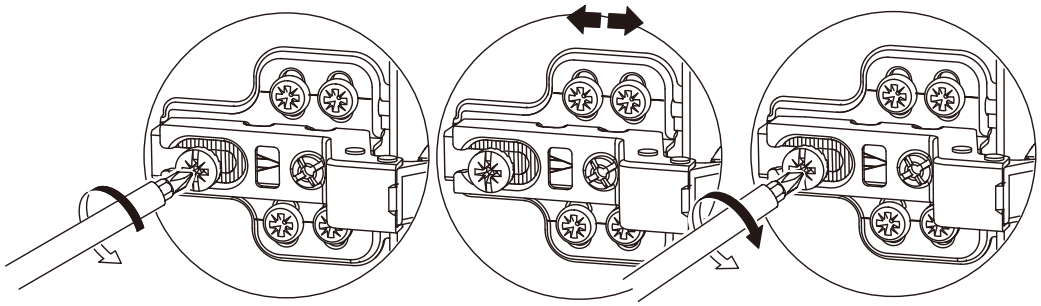

If the door doesn't meet the box at the top, adjust the top hinge toward the cabinet and/or adjust the bottom hinge away from the cabinet. If the door is gapped at the bottom, do the reverse.

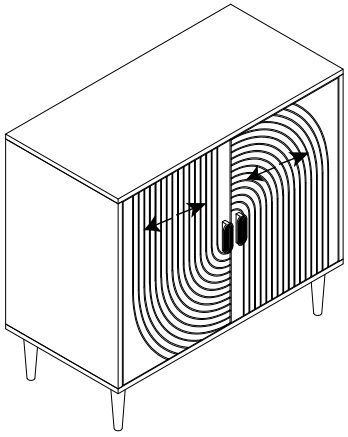

Move the door right or left

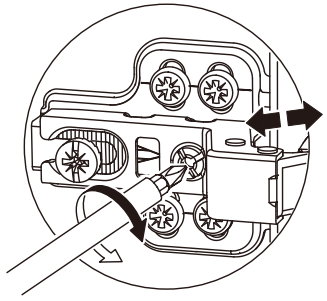

You can adjust one or both hinges on each door, depending on how much correction it needs. If the door seems to be tilting down to the right, turn the side-to-side screw on the top hinge so the hinge pulls closer to the side of the cabinet box, moving the top of the door to the left.