LOS FLEXI

LFC18-MBAM One-Piece Toilet

FEATURES

- One-Piece Toilet
- Marble Amber Finish
- Compact 24.8" Depth
- Elongated Toilet Bowl
- 18-Inch Height Seat
- Quick-Release Toilet Seat
- Powerful Siphon Flush
- Chrome, Dual-Flush Push Button
- Fully Skirted Design
- Installation Kit Included

LFC18-MBAM

Marble Amber



cs@losflexi.com

The above product images and drawings are not to scale and are for demonstration purposes only. Los Flexi reserves the right to make revisions without notice to product specifications. For the most current specifications, please go to www.losflexi.com or click on the product image on the first page.

LOS FLEXI

SPECIFICATIONS

Brand	Los Flexi	**Dimensions**	24 7/8" D * 15 1/8" W * 28 1/2" H
Model	LFC18-MBAM	**Installation Type**	Floor Mounted
Color	Marble Amber	**Outlet Location**	Floor Outlet
Toilet Type	1-Piece	**Seat Material**	Polypropylene
Bowl Material	Ceramic	**Flush Technology**	Siphonic Jet
Bowl Shape	Elongated	**Flush Type**	Dual Flush
Net Weight	97 LB	**Gallons Per Flush**	1.0 / 1.28 GPF
Bowl Height	17 5/16"	**Flush Lever Location**	Top Center
Seat Height	18 1/4"	**Flush Valve Size**	2"
MaP Score	800g	**Trayway Diameter**	2"
Rough-In	12"	**Toilet Seat Mounting**	Top-Mount
Water line	Fits 1/2" & 7/8"	**Slow Close Feature**	Yes
Skirted	Yes	**Country of Origin**	China
ADA Compliant	Yes	**Warranty**	Limited 1-Year Warranty

STANDARDS

ADA Compliant

Watersense Certified

MAP Premium Certified

Uniform Plumbing Code Certified

High Efficieny Toilet

cs@losflexi.com

The above product images and drawings are not to scale and are for demonstration purposes only. Los Flexi reserves the right to make revisions without notice to product specifications. For the most current specifications, please go to www.losflexi.com or click on the product image on the first page.

LOS FLEXI

DIMENSIONS

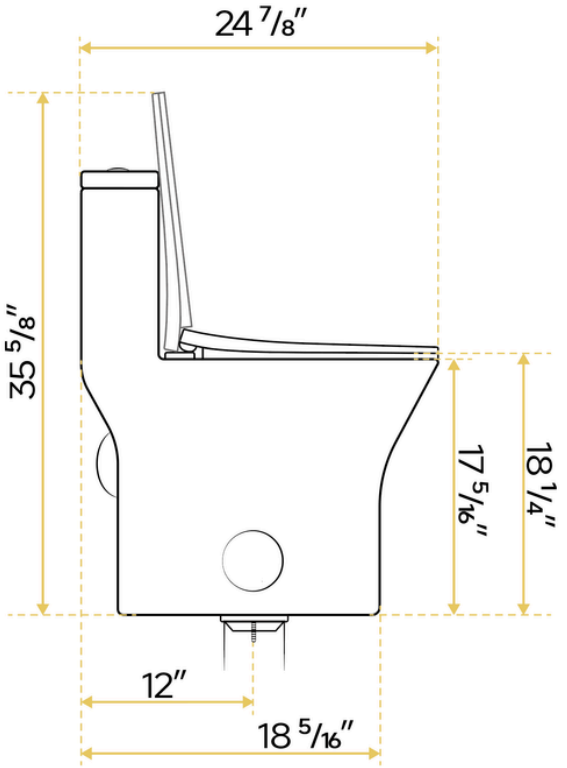

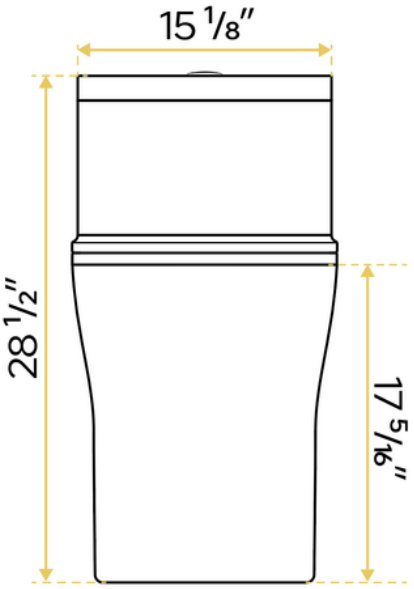

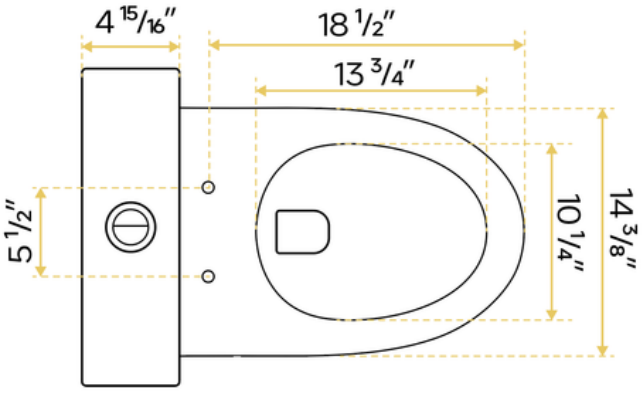

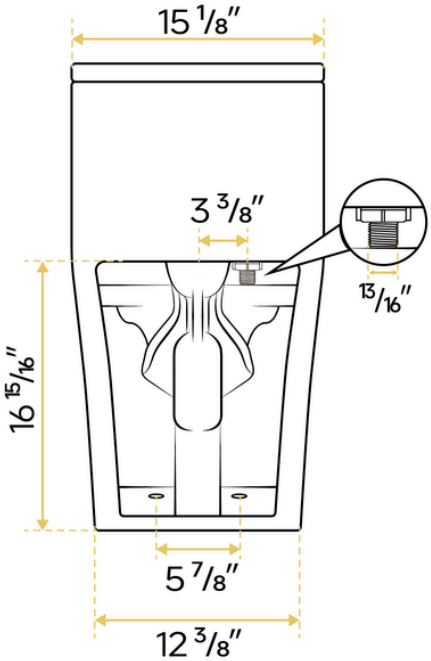

cs@losflexi.com

The above product images and drawings are not to scale and are for demonstration purposes only. Los Flexi reserves the right to make revisions without notice to product specifications. For the most current specifications, please go to www.losflexi.com or click on the product image on the first page.