# MERRYSUN

# LED CEILING FAN

## user manual

CAUTION: PLEASE READ THIS MANUAL THOROUGHLY PRIOR TO OPERATION AND SAVE IT FOR FUTURE REFERENCE.

To avoid fire, shock and serious personal injury, please read the following instructions carefully.

### IMPORTANT SAFETY INSTRUCTIONS

•Make sure that the main voltage matches the voltage stated on the rating label of the appliance.
•Disconnect the electricity to the fan at the main fuse box or circuit panel before installation or maintenance.
•All wiring must be in accordance with the local electrical codes or National Electrical Code. ELECTRICAL INSTALLATION SHOULD BE PERFORMED BY A QUALIFIED LICENSED ELECTRICIAN.
•Do not mount the fan in moist or wet places.
•Do not use the appliance in confined spaces with explosive or toxic vapours.
•Do not connect the fan motor to a dimmer switch.
•Do not insert anything into the fan blades while the fan is operating.
•The ceiling outlet box (metal instead of plastic) and ceiling support structures must be securely mounted and capable of supporting at least 50 lbs.
•Turn the fan off and wait for it to stop before reversing the fan direction.
•Use the steel screws and lock washers provided for mounting the outlet box.
•To prevent the fan from falling, make sure all the connections are secured.
•Keep out of reach of children.
•Do not repair, disassemble, or modify the product by yourself for which will void the warranty.

# ASSEMBLY DRAWING & PARTS LIST

Note: Before commencing installation, check that all parts are included.

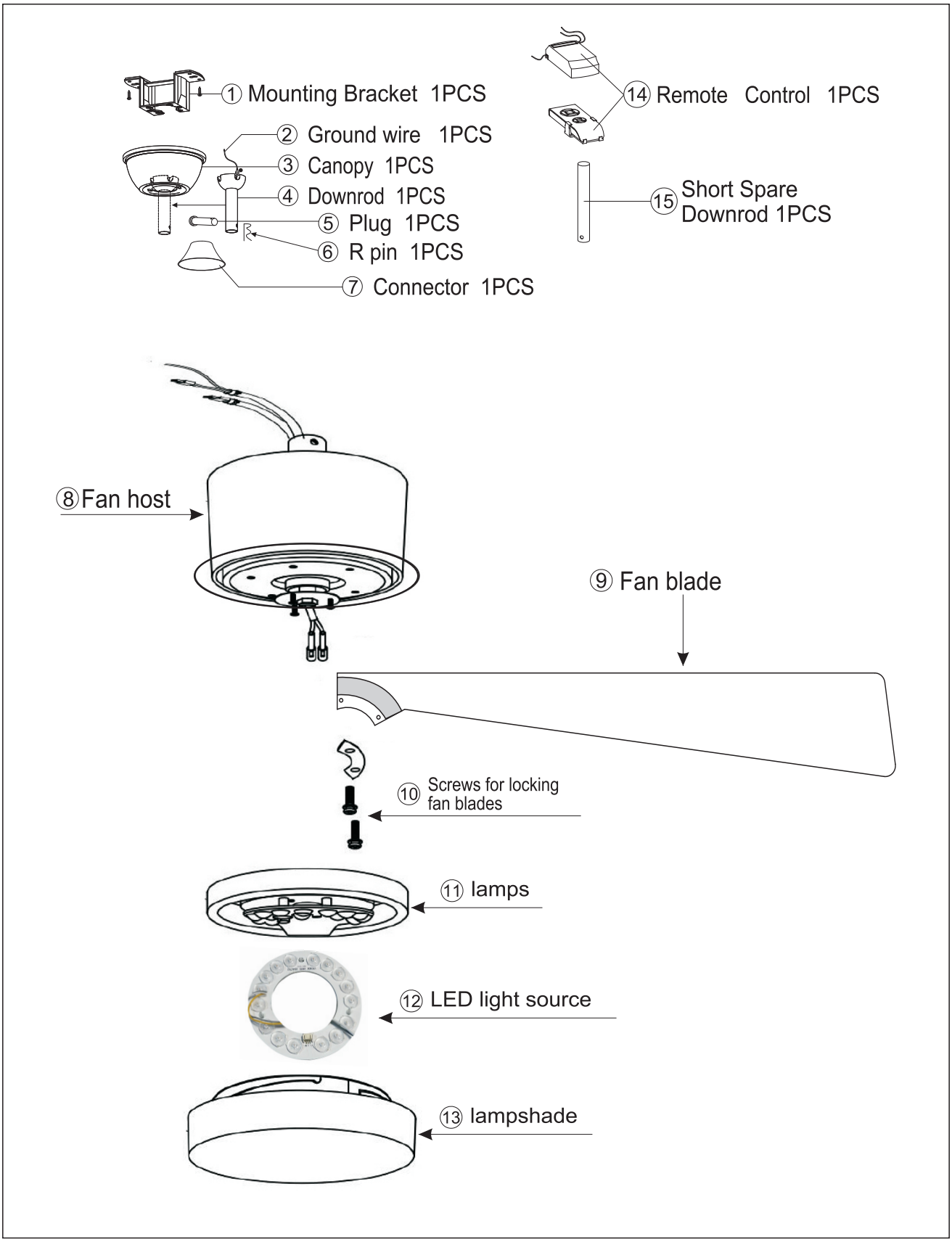

# INSTALLATION

**Cut off the electricity of the fan at the fuse or circuit breaker before beginning.**

NOTICE: Make sure the hanging location allows the blade clearance of 7.5 feet (2.3 meters) from the floor and 18 inches (45.72 centimeters) from any wall or obstruction.

1. Securely attach the hanger bracket to the ceiling with lag bolts supplied.

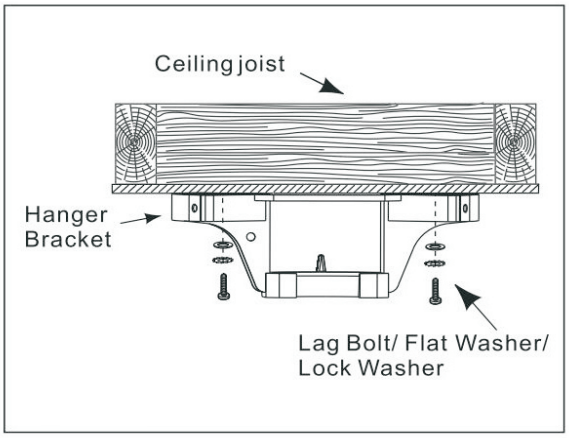


2. Align the holes on the blade with that of the fan motor, and tightly secure the blades with the provided set screws.

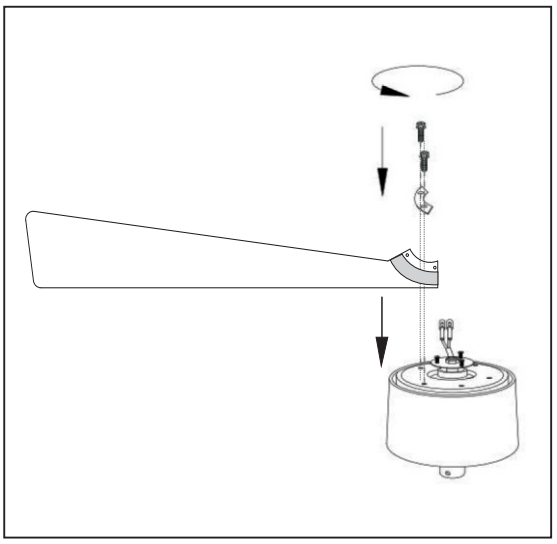

3. Loosen the set screws in the hanger ball. Remove the pin from the down rod. Remove the clevis pin and hairpin clip from the down rod.

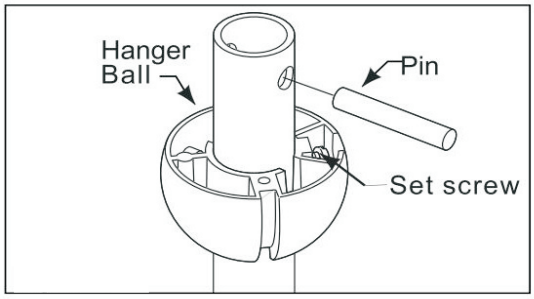


4. Put the down rod through the canopy and coupling cover.

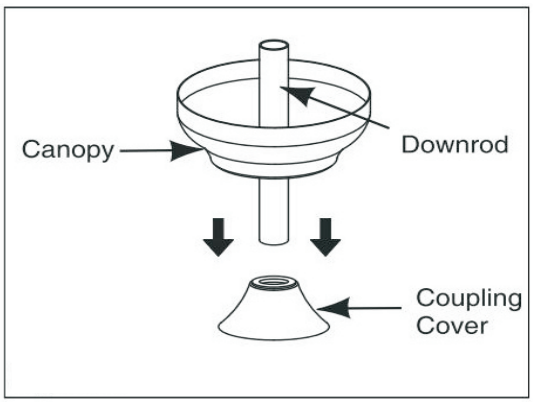

5. Pass the electrical wires of the motor through the down rod.

1) Loosen two set screws on the down rod support and then place the down rod into the down rod support.

2) Pass the clevis pin through the holes of the down rod and the down rod support, then lock with the hairpin cotter. (Be sure to press the hairpin cotter down completely.)

3) Re-tighten the set screws.

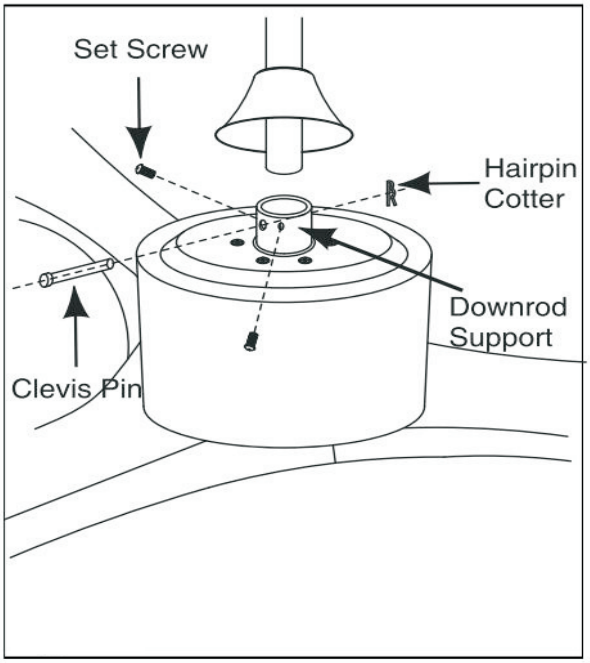


**A WARNING**
It is critical that the clevis screw in the downrod support is properly installed and the set screws are securely tightened. Failure to fix the clevis screw, hairpin cotterand set screws could result in the fan falling.

6. Set the downrod/hanger ball assembly on the hanger bracket. Be sure the groove in the ball is properly aligned with the tab on the hanger bracket.

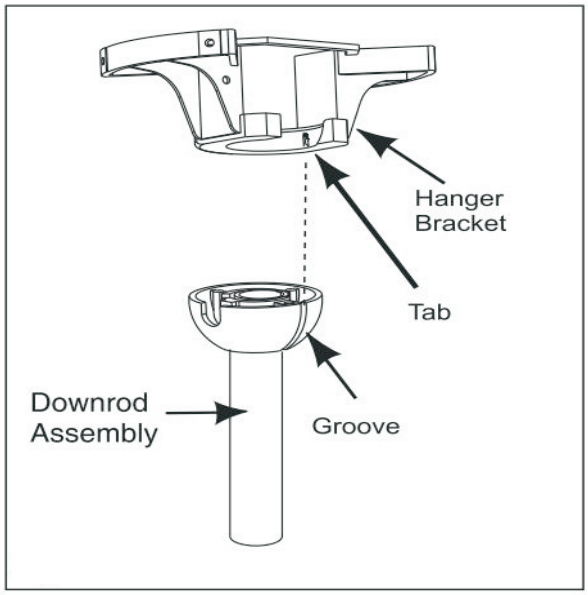


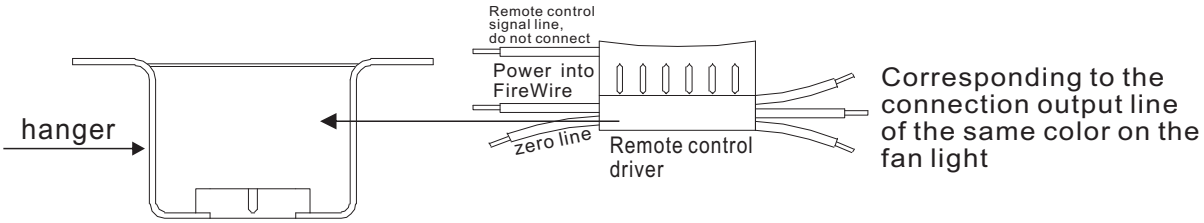


**Put the remote control into the hanger**

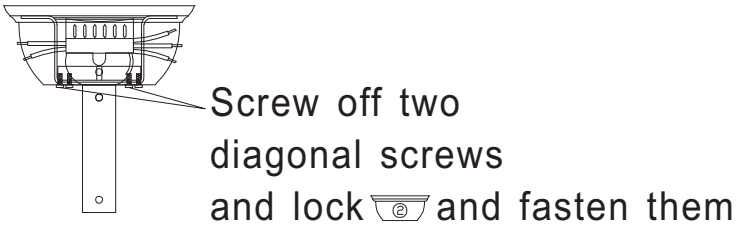

7. Installation of the LED light

1) Remove the three screws and the LED from the lamp.

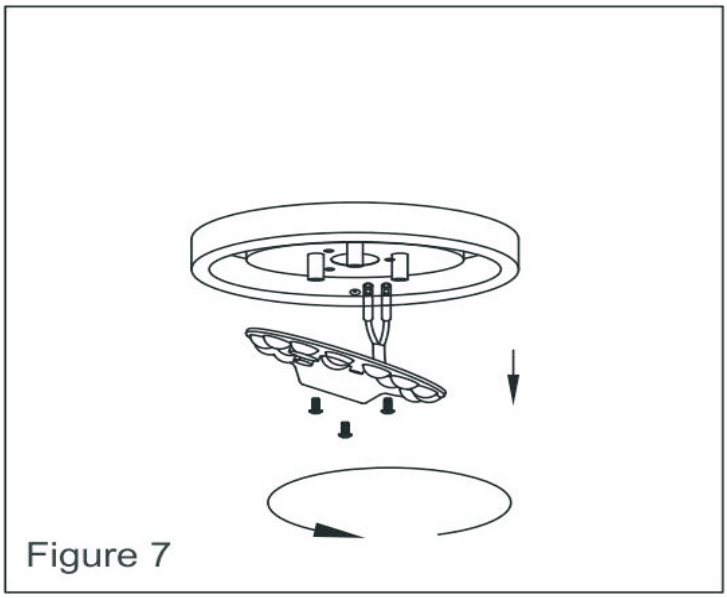


2) Align the screw holes of the lamp holder with that of the motor, and attach both parts by the screws provided.

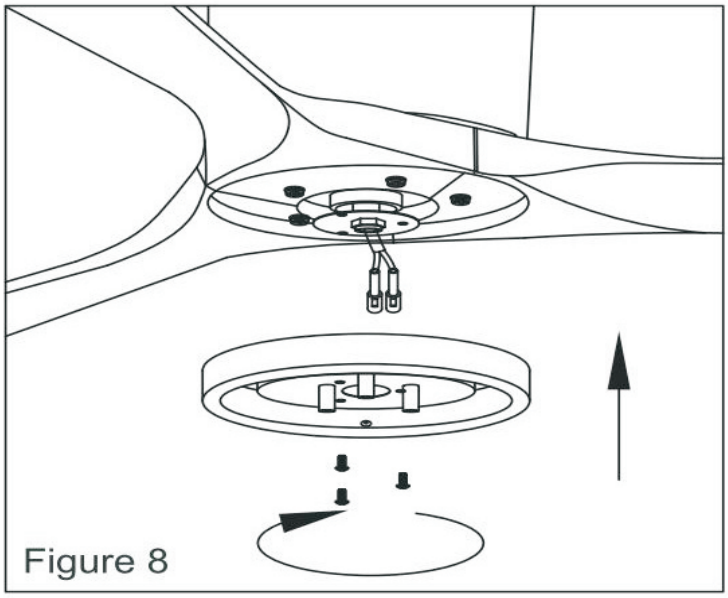


3) Connect the LED lighfs wires to the fan motor's wires. Tighten the LED with screws removed in step 1).

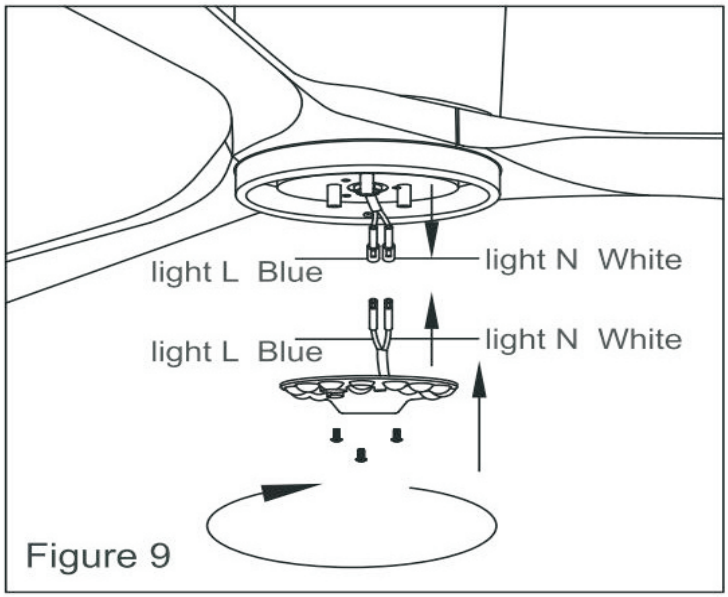

## 8. Connection of wires

| ! WARNING |
| --- |
| To avoid possible electrical shock, be sure the electricity is turned off at the main fuse box before wiring. |

Connect 110V/220V main power (dwelling) to the Terminal Block located on the hanger bracket Place the receiver through the hanging bracket and connect the wires following the color codes.

-Insert the 3P connector of the hanger bracket into the AC POWER INPUT socket of the receiver.

-Insert the 2P light connector of the fan motor assembly into the 2P LIGHT socket of the receiver.

-Insert the 3P motor connector of the fan motor assembly into the 3P MOTOR socket receiver.

-Connect the 1P yellow/green connectors of the fan motor assembly and hanger bracket.

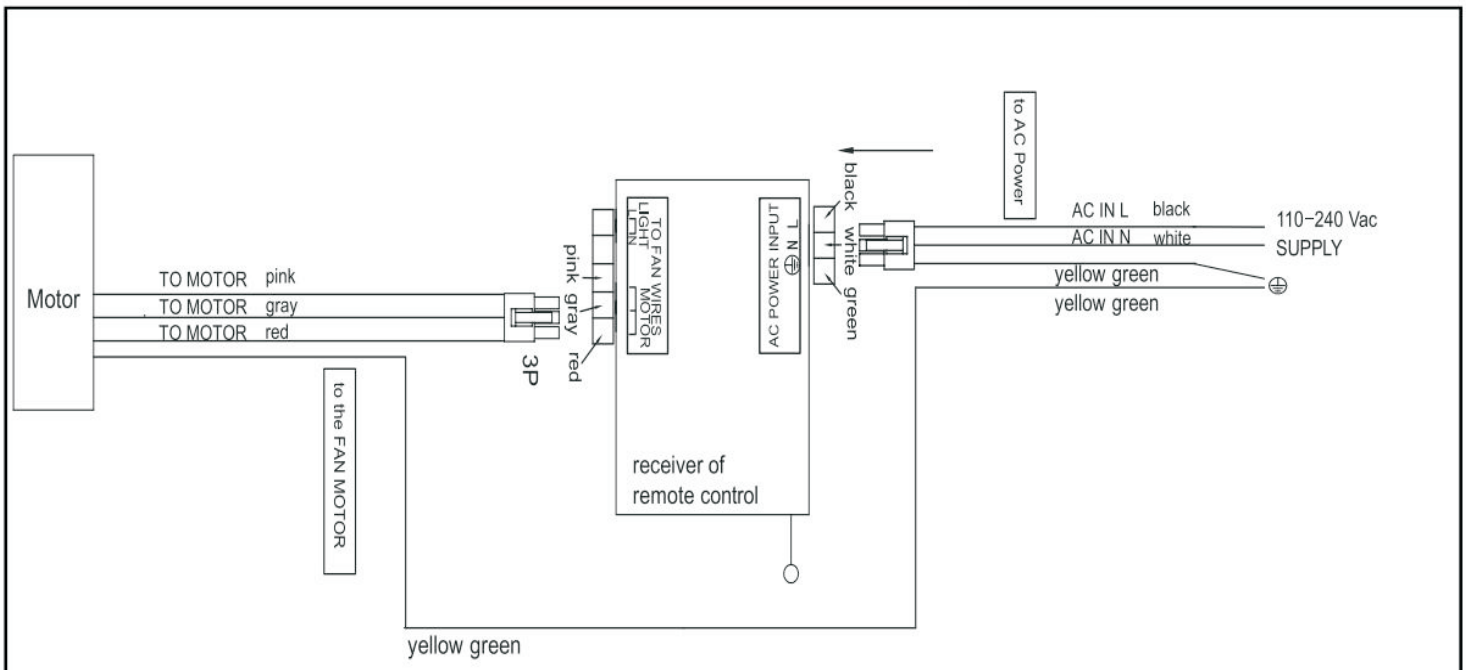


Figure 10

9. Install the glass shade.

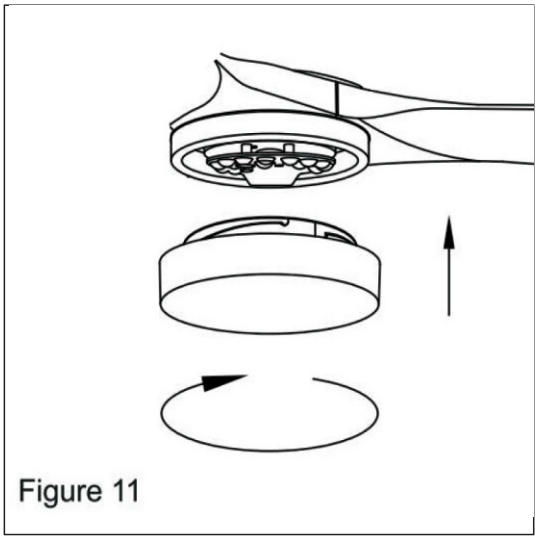
Figure 11

10. Tighten the canopy with two screws.

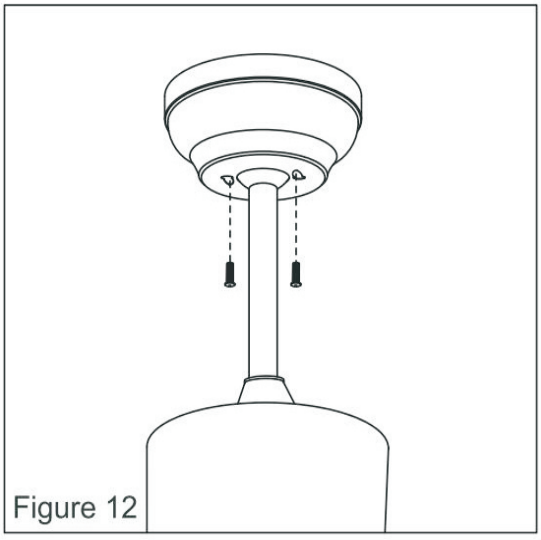
Figure 12

## MAINTENANCE

1. Periodic cleaning of your ceiling fan is the only maintenance required. Use a soft brush or lint free cloth to avoid scratching the paint finish.

2. Do not use water or any detergents when cleaning the fan or fan blades. It could damage the motor or the blades and create the possibility of an electrical shock.

3. Periodically check that the blades set to the fan motor are secure and tight.

NOTE: MAKE SURE THE POWER IS OFF AT THE ELECTRICAL PANEL BOX

# CERTIFICATE OF COMPLIANCE

| | |
|---|---|
| **Certificate Number** | E476194 |
| **Report Reference** | E476194-2020-11-06 |
| **Date** | 2020-November-23 |

**Issued to:**

Foshan Junfeng Wire and Cable Co Ltd
No. 202, Building 1, Shiyou Industrial City, No.194, Junyi Road
Shatou Community Residents Committee, Jun'an Town, Shunde District
FoshanGuangdong 528329 CN

**This is to certify that representative samples of**

APPLIANCE WIRING MATERIAL - COMPONENT

See Addendum Page for Product Designation(s).

Have been investigated by UL in accordance with the component requirements in the Standard(s) indicated on this Certificate. UL Recognized components are incomplete in certain constructional features or restricted in performance capabilities and are intended for installation in complete equipment submitted for investigation to UL LLC.

**Standard(s) for Safety:** See Addendum Page

**Additional Information:** See the UL Online Certifications Directory at https://iq.ulprospector.com for additional information

This *Certificate of Compliance* does not provide authorization to apply the UL Recognized Component Mark. Only the UL Follow-Up Services Procedure provides authorization to apply the UL Mark.

Only those products bearing the UL Recognized Component Mark should be considered as being UL Certified and covered under UL's Follow-Up Services.

Look for the UL Recognized Component Mark on the product.

Bruce Mahrenholz, Director North American Certification Program

UL LLC

Any information and documentation involving UL Mark services are provided on behalf of UL LLC (UL) or any authorized licensee of UL. For questions, please contact a local UL Customer Service Representative at http://ul.com/aboutul/locations/

# CERTIFICATE OF COMPLIANCE

| | |
|---|---|
| **Certificate Number** | E476194 |
| **Report Reference** | E476194-2020-11-06 |
| **Date** | 2020-November-23 |

This is to certify that representative samples of the product as specified on this certificate were tested according to the current UL requirements

SINGLE-CONDUCTOR THERMOPLASTIC-INSULATED WIRE
1332

CSA C22.2 NO.210-15 APPLIANCE WIRING MATERIAL PRODUCTS
UL 758 STANDARD FOR APPLIANCE WIRING MATERIAL

**Bruce Mahrenholz, Director North American Certification Program**

**UL LLC**

**Any information and documentation involving UL Mark services are provided on behalf of UL LLC (UL) or any authorized licensee of UL. For questions, please contact a local UL Customer Service Representative at http://ul.com/aboutul/locations/**

# CERTIFICATE OF COMPLIANCE

| | |
|---|---|
| **Certificate Number** | E476194 |
| **Report Reference** | E476194-2020-11-07 |
| **Date** | 2020-November-23 |

**Issued to:**

Foshan Junfeng Wire and Cable Co Ltd
No. 202, Building 1, Shiyou Industrial City, No.194, Junyi Road
Shatou Community Residents Committee, Jun'an Town, Shunde District
FoshanGuangdong 528329 CN

**This is to certify that representative samples of**

APPLIANCE WIRING MATERIAL - COMPONENT

Appliance Wire, Extruded FEP Insulated Singles, Class I, Group A, B, or A/B.

Have been investigated by UL in accordance with the component requirements in the Standard(s) indicated on this Certificate. UL Recognized components are incomplete in certain constructional features or restricted in performance capabilities and are intended for installation in complete equipment submitted for investigation to UL LLC.

**Standard(s) for Safety:** REFER ADDENDUM PAGE

**Additional Information:** See the UL Online Certifications Directory at https://iq.ulprospector.com for additional information

This *Certificate of Compliance* does not provide authorization to apply the UL Recognized Component Mark. Only the UL Follow-Up Services Procedure provides authorization to apply the UL Mark.

Only those products bearing the UL Recognized Component Mark should be considered as being UL Certified and covered under UL's Follow-Up Services.

Look for the UL Recognized Component Mark on the product.

**Bruce Mahrenholz, Director North American Certification Program**

**UL LLC**

**Any information and documentation involving UL Mark services are provided on behalf of UL LLC (UL) or any authorized licensee of UL. For questions, please contact a local UL Customer Service Representative at http://ul.com/aboutul/locations/**

# CERTIFICATE OF COMPLIANCE

| | |
|---|---|
| **Certificate Number** | E476194 |
| **Report Reference** | E476194-2020-11-07 |
| **Date** | 2020-November-23 |

This is to certify that representative samples of the product as specified on this certificate were tested according to the current UL requirements

UL 758 Appliance Wiring Material
CSA C22.2 No. 210-15 Appliance Wiring Material Products

**Bruce Mahrenholz, Director North American Certification Program**

**UL LLC**

**Any information and documentation involving UL Mark services are provided on behalf of UL LLC (UL) or any authorized licensee of UL. For questions, please contact a local UL Customer Service Representative at http://ul.com/aboutul/locations/**

File E476194

Project 4789618255

November 7, 2020

REPORT

on

COMPONENT - Appliance Wiring Material

Foshan Junfeng Wire and Cable Co., Ltd
Foshan, Guangdong, 528329 China

Copyright © 2020 UL LLC

UL LLC authorizes the above named company to reproduce this Report only for purposes as described in the Conclusion. The Report should be reproduced in its entirety; however to protect confidential product information, the Construction Details Descriptive pages may be excluded