

DWQ3502020

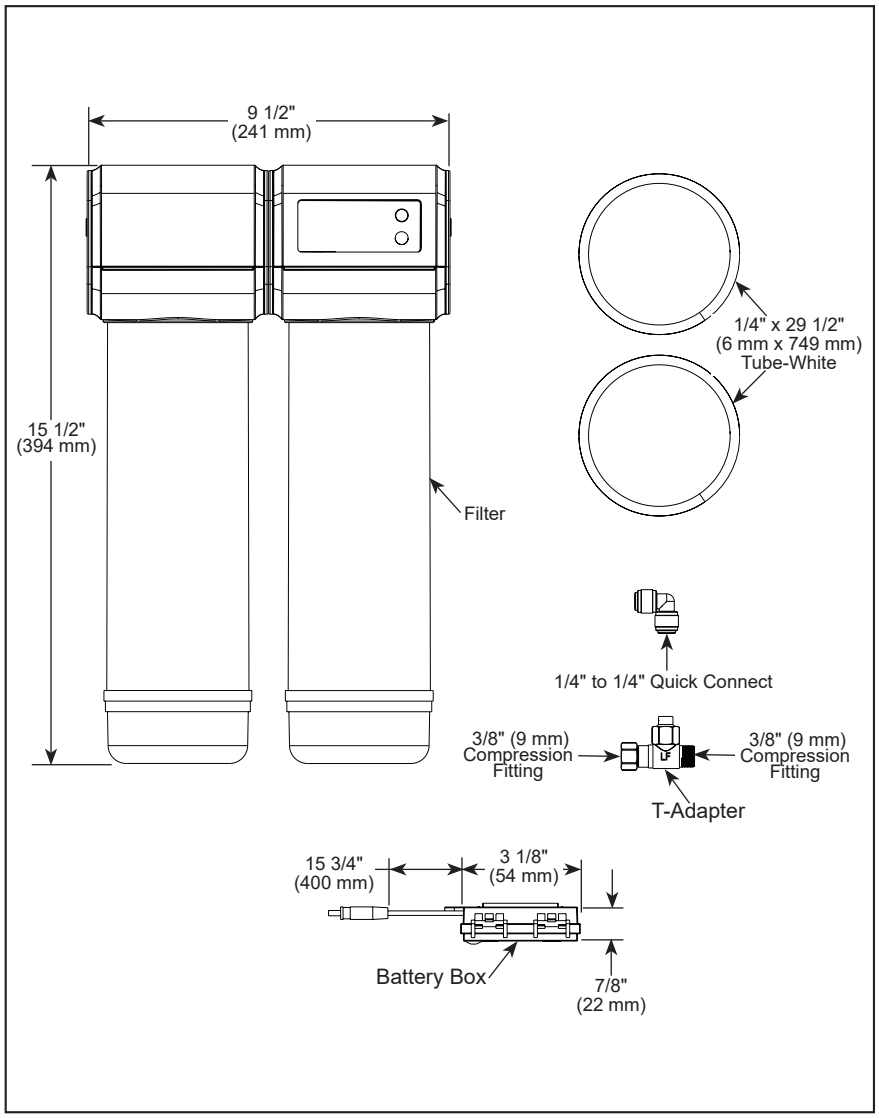

see what Delta can do℠

CLARIFI™ 2-STAGE UNDER SINK ADVANCED WATER FILTRATION SYSTEM

STANDARD SPECIFICATIONS:

- For cold water installation only
- CLARIFI™ 2-Stage Under Sink Advanced Water Filtration System reduces multiple contaminants and dispenses filtered water through a beverage faucet
  - Carbon Filter & Sediment Filter (DWQ300700) Recommended Lifespan - 1,100 gallons or 1 year* whichever comes first. Actual lifespan may vary depending on water quality and usage.
- Key Specifications:
  - Feed Water Pressure: 20-100 PSI (0.14-0.68 MPa)
  - Feed Water Temperature: 41-100˚F (5-38˚C)
  - Rated Capacity: 1,100 gallons (4,164 Liters)
  - Rated Filtered Water Flow Rate: .75 GPM (2.83 L/min)
- Certified reduction of more than 72 contaminants from drinking water when tested against NSF standards including: Chlorine Taste & Odor, Particulate Class 1, Chloramine, PFOA/PFOS, Cysts, Lead, Volatile Organic Compounds (VOC's), Emerging Contaminants, Microplastics, Turbidity
- Pairs with a Delta® Beverage Faucet, available in a variety of styles and finishes (not for direct connection to main kitchen faucet)
- Integrated filter life tracking and battery replacement reminders
- Batteries included (3) AA
- For specific performance claims refer to the Performance Data Sheet section (page 2 and 3)
- Refer to the installation manual for more specific installation requirements
- Do not use with water that is microbiologically unsafe or of unknown quality without adequate disinfection before or after the system. Systems certified for cyst reduction may be used on disinfected water that may contain filterable cysts.

WARRANTY

- This Delta® Water Filtration System is warranted to the original consumer purchaser or commercial user, as applicable, to be free from defects in material and workmanship for the applicable period specified below:
  - Water Filtration System and Components: Five (5) years from the date the product was received by the original consumer purchaser or their authorized representative (installation contractor, etc.)
  - Filter Cartridge: Thirty (30) days from the date that the product is received by the original purchaser or their authorized representative (installation contractor, etc.)
- Please go to www.deltafaucet.com for the complete details of our limited warranty.

COMPLIES WITH:

- The filter when used with DWQ3502020, has been certified by IAPMO R&T against and conforms to NSF/ANSI 42, 53, 401 for the reduction of substances for specific performance claims as verified and substantiated by test data as noted in performance data sheet, and conforms to NSF/ANSI 372

Delta Faucet Company reserves the right (1) to make changes in specifications and materials, and (2) to change or discontinue models, both without notice or obligation. Dimensions are for reference only. See current full-line price book or www.deltafaucet.com for finish options and product availability.

Delta Faucet Company
55 E. 111th Street, Carmel, IN 46280
350 South Edgeware Road, St. Thomas, ON N5P 4L1
© 2025 Delta Faucet Company

PERFORMANCE DATA SHEET CLARIFI™ 2- Stage Under Sink Advanced Water Filtration System*					
Model	**Replacement**	**Operating Pressure Range**	**Operating Temperature Range**	**Rated Flow**	**Rated Capacity**
DWQ3502020	DWQ300700 Replacment Filter Pack - Sediment & Advanced Carbon Filter	20 - 100 PSI (0.14 - 0.68 Mpa)	41 - 100 ˚ F (5 - 38 ˚ C)	0.75 GPM (2.83 L/min)	1,100 Gallons (4164 L)

This system has been tested according to NSF/ ANSI 42, 53, and 401 for reduction of the substances listed below. The concentration of the indicated substances in water entering the system was reduced to a concentration less than or equal to the permissible limit for water leaving the system, as specified in NSF/ ANSI 42, 53, and 401.

* While testing was performed under standard laboratory conditions, actual performance may vary.

Applies To	Applicable Standard	Substance	Influent Challenge Concentration		Maximum Permissible Product Water Concentration		Minimum Permissible % Reduction	Average Product Water Concentration		Average Product Contaminant % Reduction
DWQ3502020	NSF/ ANSI 42	chloramine[a]	3.0 ± 10%	mg/L	-	mg/L	≥ 80%	0.14	mg/L	94.9%
		chlorine[b]	2.0 ± 10%	mg/L	-	mg/L	≥ 50%	-	mg/L	97.5%
		particulate, Class I particles 0.5 to <1 µm	>10,000	particles/mL	-	-	≥ 85%	-	-	99.9%
	NSF/ ANSI 53	chloroform (chemical surrogate for VOC)	0.300 ± 30%	mg/L	15	µg/L		0.1227	µg/L	99.96%
		cyst	>50,000	cysts/L	-	-	99.95%	-	-	99.996%
		lead	0.15 ± 10%	mg/L	5	µg/L	-	2.3375	µg/L	98.4%
		per- and polyfluoroalkyl substances (PFAS)[c]								
		PFOA + PFOS	0.0015 ± 10%	mg/L	0.02	µg/L		0.0164	µg/L	99.0%
		turbidity	11 ± 1	NTU	0.5	NTU	-	0.3	NTU	97.5%
	NSF/ ANSI 401	atenolol	200 ± 20%	ng/L	30	ng/L	-	1.0	ng/L	99.5%
		carbamazepine	1400 ± 20%	ng/L	200	ng/L	-	10.0	ng/L	99.31%
		DEET (diethyltoluamide)	1400 ± 20%	ng/L	200	ng/L	-	10.0	ng/L	99.3%
		linuron	140 ± 20%	ng/L	20	ng/L	-	1.0	ng/L	99.3%
		metolachlor	1400 ± 20%	ng/L	200	ng/L	-	12.7	ng/L	99.1%
		meprobamate	400 ± 20%	ng/L	60	ng/L	-	1.0	ng/L	99.8%
		trimethoprim	140 ± 20%	ng/L	20	ng/L	-	1.0	ng/L	99.4%
		Bisphenol A (BPA)	2000 ± 20%	ng/L	300	ng/L	-	10.0	ng/L	99.5%
		estrone	140 ± 20%	ng/L	20	ng/L	-	1.0	ng/L	99.3%
		ibuprofen	400 ± 20%	ng/L	60	ng/L	-	10.0	ng/L	97.5%
		naproxen	140 ± 20%	ng/L	20	ng/L	-	1.8	ng/L	98.8%
		nonylphenol	1400 ± 20%	ng/L	200	ng/L	-	17.5	ng/L	98.8%
		phenytoin	200 ± 20%	ng/L	30	ng/L	-	1.0	ng/L	99.5%
		microplastics, particles 0.5 to <1 µm[d]	>10,000	particles/mL	-	-	85.0%	-	-	99.9%

a. As monochloramine (measured as Cl2/L).

b. Reduction as calculated based on chloramine as the surrogate chemical.

c. For PFAS, the individual influent tolerance is ± 30%

d. There is no rated capacity for microplastics due to the broad variation in the quantity of particulate matter found in drinking water.

Volatile Organic Chemicals (VOCs) included by surrogate testing of chloroform										
Applies To	Applicable Standard	Chemical	Drinking water regulatory level (MCL/MAC) [a]		Influent challenge concentration [b]		Chemical reduction percent	Maximum product water concentration		
DWQ3002020	NSF/ANSI 53	alachlor [c]	0.002	mg/L	0.05	mg/L	> 98	0.001	mg/L	
		atrazine [c]	0.003	mg/L	0.1	mg/L	> 97	0.003	mg/L	
		benzene [c]	0.005	mg/L	0.081	mg/L	> 99	0.001	mg/L	
		carbofuran [c]	0.04	mg/L	0.19	mg/L	> 99	0.001	mg/L	
		carbon tetrachloride [d]	0.005	mg/L	0.078	mg/L	98	0.0018	mg/L	
		chlorobenzene [c]	0.1	mg/L	0.077	mg/L	> 99	0.001	mg/L	
		chloropicrin [c]	—	—	0.015	mg/L	99	0.0002	mg/L	
		2,4-D [d]	0.07	mg/L	0.11	mg/L	98	0.0017	mg/L	
		dibromochloropropane (DBCP) [c]	0.0002	mg/L	0.052	mg/L	> 99	0.00002	mg/L	
		o-dichlorobenzene [c]	0.6	mg/L	0.08	mg/L	> 99	0.001	mg/L	
		p-dichlorobenzene [c]	0.075	mg/L	0.04	mg/L	> 98	0.001	mg/L	
		1,2-dichloroethane [e]	0.005	mg/L	0.088	mg/L	95 [e]	0.0048	mg/L	
		1,1-dichloroethylene [c]	0.007	mg/L	0.083	mg/L	> 99	0.001	mg/L	
		cis-1,2-dichloroethylene [c]	0.07	mg/L	0.17	mg/L	> 99	0.0005	mg/L	
		trans-1,2-dichloroethylene [c]	0.1	mg/L	0.086	mg/L	> 99	0.001	mg/L	
		1,2-dichloropropane [c]	0.005	mg/L	0.08	mg/L	> 99	0.001	mg/L	
		cis-1,3-dichloropropylene [c]	—	—	0.079	mg/L	> 99	0.001	mg/L	
		dinoseb [d]	0.007	mg/L	0.17	mg/L	99	0.0002	mg/L	
		endrin [d]	0.002	mg/L	0.053	mg/L	99	0.00059	mg/L	
		ethylbenzene [c]	0.7	mg/L	0.088	mg/L	> 99	0.001	mg/L	
		ethylene dibromide (EDB) [c]	0.00005	mg/L	0.044	mg/L	> 99	0.00002	mg/L	
		haloacetonitriles (HAN) [c] bromochloroacetonitrile [c] dibromoacetonitrile [c] dichloroacetonitrile [c] trichloroacetonitrile [c]	—	—	0.022 0.024 0.0096 0.015	mg/L	98 98 98 98	0.0005 0.0006 0.0002 0.0003	mg/L	
		haloketones (HK) [c] 1,1-dichloro-2-propanone [c] 1,1,1-trichloro-2-propanone [c]	—	—	0.0072 0.0082	mg/L	99 96	0.0001 0.0003	mg/L	
		heptachlor (H-34, Heptox)	0.0004	mg/L	0.025	mg/L	> 99	0.00001	mg/L	
		heptachlor epoxide [f]	0.0002	mg/L	0.0107 [f]	mg/L	98	0.0002	mg/L	
		hexachlorobutadiene [c]	—	—	0.044	mg/L	> 98	0.001	mg/L	
		hexachlorocyclopentadiene [c]	0.05	mg/L	0.06	mg/L	> 99	0.000002	mg/L	
		lindane [c]	0.0002	mg/L	0.055	mg/L	> 99	0.00001	mg/L	
		methoxychlor [c]	0.04	mg/L	0.05	mg/L	> 99	0.0001	mg/L	
		pentachlorophenol [c]	0.001	mg/L	0.096	mg/L	> 99	0.001	mg/L	
		simazine [c]	0.004	mg/L	0.12	mg/L	> 97	0.004	mg/L	
		styrene [c]	0.1	mg/L	0.15	mg/L	> 99	0.0005	mg/L	
		1,1,2,2-tetrachloroethane [c]	—	—	0.081	mg/L	> 99	0.001	mg/L	
		tetrachloroethylene [c]	0.005	mg/L	0.081	mg/L	> 99	0.001	mg/L	
		toluene [c]	1	mg/L	0.078	mg/L	> 99	0.001	mg/L	
		2,4,5-TP (silvex) [d]	0.05	mg/L	0.27	mg/L	99	0.0016	mg/L	
		tribromoacetic acid [c]	—	—	0.042	mg/L	> 98	0.001	mg/L	
		1,2,4-trichlorobenzene [c]	0.07	mg/L	0.16	mg/L	> 99	0.0005	mg/L	
		1,1,1-trichloroethane [d]	0.2	mg/L	0.084	mg/L	95	0.0046	mg/L	
		1,1,2-trichloroethane [c]	0.005	mg/L	0.15	mg/L	> 99	0.0005	mg/L	
		trichloroethylene [c]	0.005	mg/L	0.18	mg/L	> 99	0.0010	mg/L	
		trihalomethanes (includes): chloroform (surrogate chemical) bromoform bromodichloromethane chlorodibromomethane	0.08	mg/L	0.3	mg/L	95	0.015	mg/L	
		xylenes (total) [c]	10	mg/L	0.07	mg/L	> 99	0.001	mg/L	

a. These harmonized values were agreed upon by representatives of U.S. EPA and Health Canada for the purpose of evaluating products to the requirements of this standard.
b. Influent challenge levels are average influent concentrations determined in surrogate qualification testing.
c. Maximum product water level was not observed but was set at the detection limit of the analysis.
d. Chemical reduction percent and maximum product water level calculated at chloroform 95% breakthrough point as determined in surrogate qualification testing.
e. Maximum product water level is set at a value determined in surrogate qualification testing.
f. The surrogate test results for heptachlor epoxide demonstrated a 98% reduction. These data were used to calculate an upper occurrence concentration that would produce a maximum product water level at the Maximum Contaminant Level (MCL).

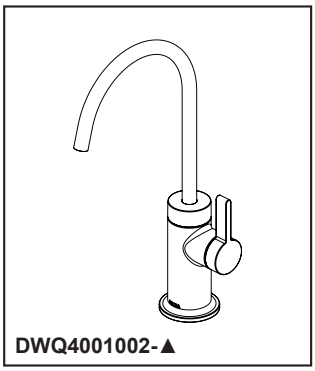

DWQ4001002-▲

see what Delta can do™

DISPENSERS

- Single Handle Deck Mount
- 1 Hole Sink Applications
- Integrated Supply Tubes
- Air Gap Included

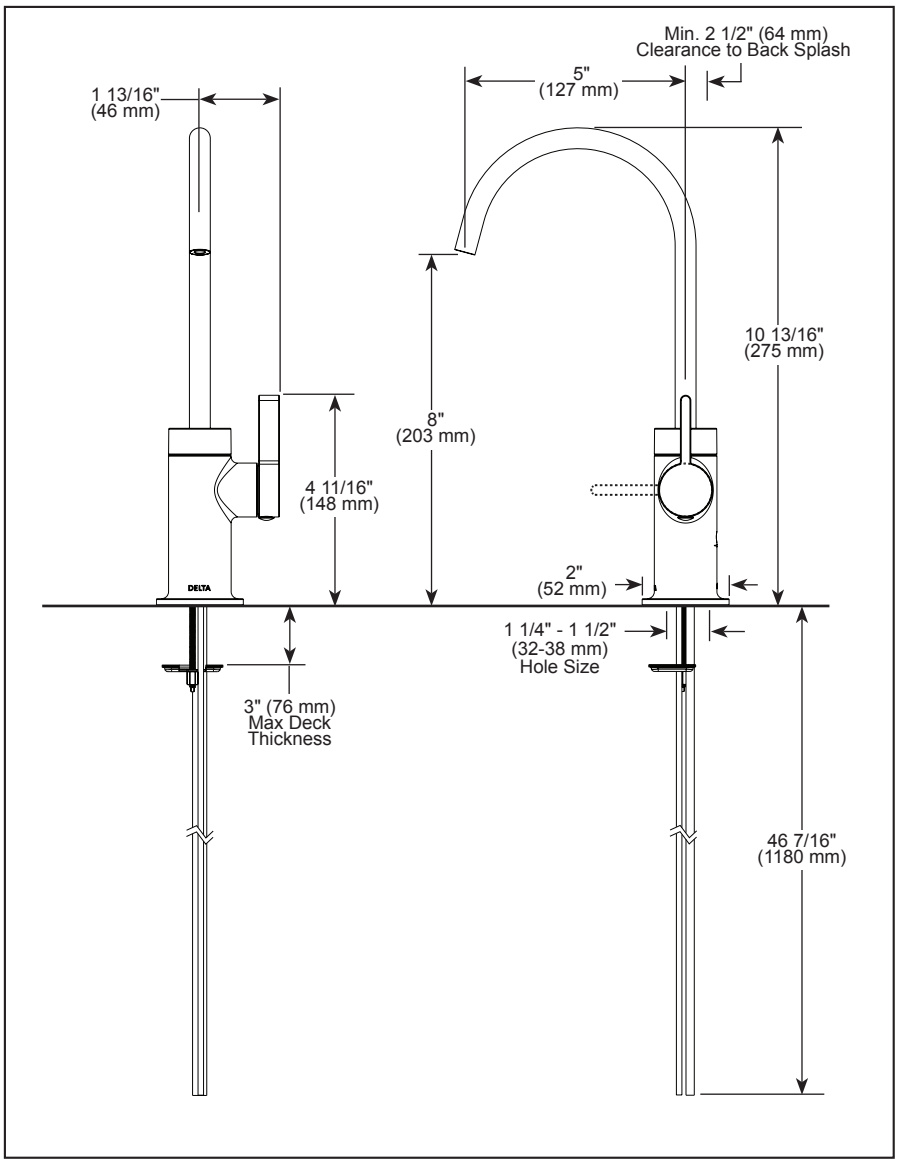

▲ Designate proper finish suffix

STANDARD SPECIFICATIONS:

- Laminar water stream with max flow rate 1.5 gpm @ 60 psi, 5.7 L/min @ 414 kPa
- Works with RO systems as a cold water tap
- Spout swings 360°
- Single lever handle design
- Air gap included with 1/4" tube for RO system and 3/8" tube for drain
- Mounting wrench to assist in tightening mounting nut securely
- Integrated supply tube

WARRANTY

- Parts and Finish - Lifetime limited warranty; or for commercial purchasers, 10 years for multi-family residential (apartments and condominiums) and 5 years for all other commercial uses, in each case from the date the product is received by the original purchaser or their authorized representative (installation contractor, etc.).
- Electronic Parts and Batteries (if applicable) - 5 years from the date the product is received by the original purchaser or their authorized representative (installation contractor, etc.); or for commercial purchasers, 1 year from the date the product is received by the original purchaser or their authorized representative (installation contractor, etc.). No warranty is provided on batteries.
- Please go to www.deltafaucet.com for the complete details of our limited warranty.

COMPLIES WITH:

- ASME A112.18.1 / CSA B125.1
- ICC/ANSI A117.1

Delta Faucet Company reserves the right (1) to make changes in specifications and materials, and (2) to change or discontinue models, both without notice or obligation. Dimensions are for reference only. See current full-line price book or www.deltafaucet.com for finish options and product availability.

DSP-K-DWQ4001002 Rev. A

Delta Faucet Company
55 E. 111th Street, Carmel, IN 46280
350 South Edgeware Road, St. Thomas, ON N5P 4L1
© 2024 Delta Faucet Company