FREEDOM-WEB

FREEDOM®
OUTDOOR LIVING

Plastic Lattice

INSTALLATION INSTRUCTIONS

Read all instructions prior to installing product.
Refer to manufacturers safety instructions when operating any tools.

To register your product, please visit:

freedomproduct.com

⚠ WARNING:

- Improper installation of this product can result in personal injury. Always wear safety goggles when cutting, drilling and assembling the product.
- Incorrect installation may cause harm to the product or individual.
- Not for horizontal installations.

NOTICE:

- DO NOT attempt to assemble the kit if parts are missing or damaged.
- DO NOT return the product to the store, for assistance or replacement parts call: 1-800-336-2383.

BEFORE YOU BEGIN:

Check your local zoning laws.

- Local zoning laws and Home Owners Associations may regulate the location, style and height of your lattice or even require a permit signoff beforehand.
- 2 person installation recommended.

TOOLS/MATERIALS NEEDED:

	Tape Measure
	Saw
	Rubber Mallet
	Drill
	#2 Square Drive Bit
	Pencil
	Safety Glasses
	1½" Stainless Steel Screws
	Divider Molding**
	Cap Molding**

**Optional.

Lattice Components:

Description
Lattice
1½" Stainless Steel Screws*
Divider Molding*
Cap Molding*

*Sold separately.

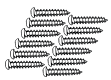

Screws*



Divider Molding*

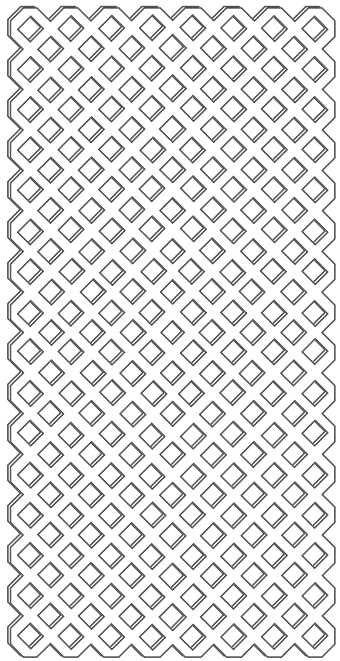

Lattice



Cap Molding*

To obtain and review a copy of the warranty please go to: Freedomproduct.com/warranty. You can also contact 1.888.418.4400 or write to Freedom Outdoor Living, 7830 Freeway Circle, Middleburg Heights, Ohio 44130 to obtain a copy of the warranty.

INSTALLING WITHOUT MOULDINGS:

1 Pre-drill oversized holes through lattice (drill the largest hole that screw head will allow without fitting though) (Fig. 1). Center each screw in oversized holes and do not overtighten to allow for expansion and contraction of lattice (Fig. 2).

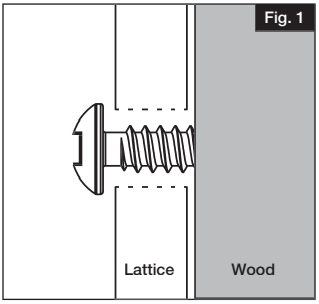

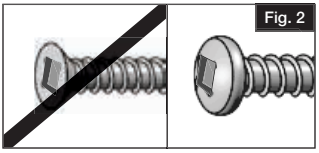

2 Hang the lattice with a screw every 24". Attach sides and bottom loosely. **DO NOT** tighten all the way (Fig. 3).

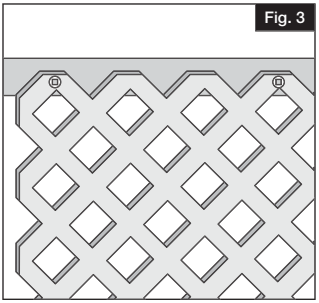

3 If using more than one panel, do not butt panels together (Fig. 4).

Leave ¼" gap to allow for expansion and contraction

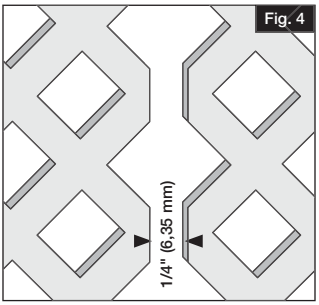

INSTALLING WITH CAP & DIVIDER MOULDINGS:

1 Pre-drill oversized holes through lattice and moulding (drill the largest hole that screw head will allow without fitting though) (Fig. 1). Center each screw in oversized holes and do not overtighten to allow for expansion and contraction of lattice (Fig. 2).

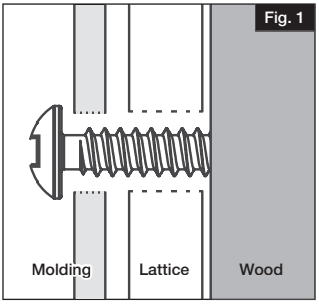

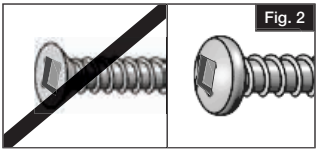

2 Along the top, drill and fasten every 24". Drill holes and hang through both moulding and panel (Fig. 3).

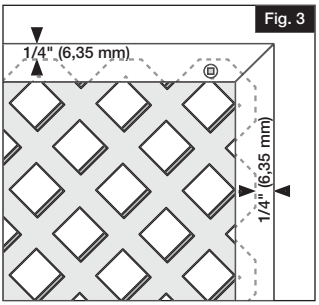

3 Along the sides and bottom, drill holes and put screws through moulding only (Fig. 4).

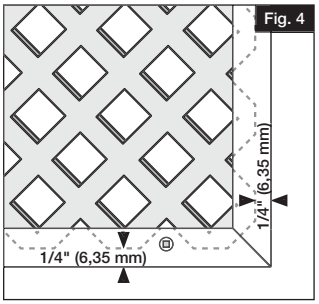

4 Allow a ¼" gap on all sides for expansion with cap and divider mouldings (Fig. 5).

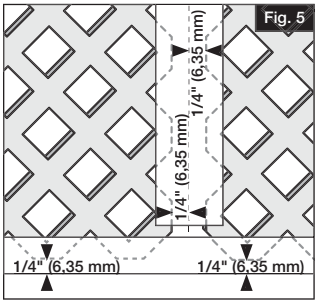

IMPORTANT THINGS TO REMEMBER:

- If the lattice bows, loosen attaching screws, make sure you have allowed enough gap for expansion and contraction.

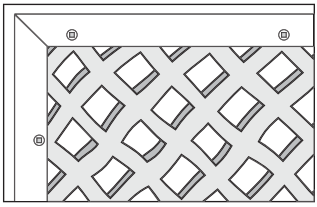

- Place screws 24" apart.

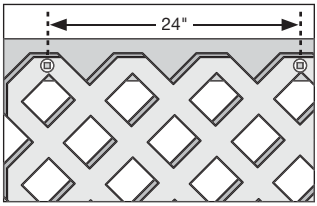

- **DO NOT** use for horizontal Installation.

BARRETTE OUTDOOR LIVING

7830 FREEWAY CIRCLE
MIDDLEBURG HEIGHTS, OHIO 44130

TEL: (888) 418-4400
WWW.FREEDOM.BARRETTEOUTDOORLIVING.COM

FREEDOM®
OUTDOOR LIVING

BUILT BY Barrette