Tend® | K-PR20713-T2D

Urinal with Mach® Tripoint® touchless DC 0.5 gpf flushometer

Features

- Fixture and touchless flushometer combination is engineered for optimal performance
- Washout urinal
- 0.5 gpf (1.9 lpf)
- 3/4" (19 mm) top spud
- Flush valve activation distance is factory-set
- No external flush volume adjustment ensures water conservation
- 24-hour automatic sentinel flush keeps trapway fresh
- Mechanical override enables flushometer to be used manually even during a power outage
- Chloramine and chlorine resistance on all rubber components exposed to waterway
- Locking stop cap provides protection against vandalism
- 125-micron filter protects internal components
- High back pressure vacuum breaker
- Powered by 1.5V AA lithium batteries
- For this combination, order K-20713-ET urinal and K-10UD00G20 flushometer
- Patented piston technology for superior flush volume accuracy
- This product can help a building earn Water Efficiency points in LEED® Green Building Rating System



Sustainability

Available Colors/Finishes

Color tiles intended for reference only.

NA NA Not Applicable

1-800-4KOHLER (1-800-456-4537)
Kohler Co. reserves the right to make revisions without notice to product specifications.
For the most current specification sheet, go to www.kohler.com USA or www.kohler.ca Canada.
3-27-2026 18:18 - US-CA

Codes/Standards

ADA compliant when installed to the specific requirements of these regulations.

ADA

ASME A112.18.1/CSA B125.1
ASME A112.19.2/CSA B45.1
ASSE 1037/ASME A112.1037/CSA B125.37
DOE - Energy Policy Act 1992
EPA WaterSense®
ADA
ICC/ANSI A117.1

Technical Information

All product dimensions are nominal.

Waste Outlet:	Wall

Material

- Vitreous china urinal
- Brass flush valve with durable Polished Chrome finish

Included Combo Skus

- K-20713-ET Contemporary washout urinal with top spud
- K-10UD00G20 Touchless urinal flushometer, DC-powered, 0.5 gpf

Technology

- Electronic infrared sensor with Tripoint® technology for accurate activation

Warranty

See website for detailed warranty information.

KOHLER® One-Year Limited Warranty

1-800-4KOHLER (1-800-456-4537)
Kohler Co. reserves the right to make revisions without notice to product specifications.
For the most current specification sheet, go to www.kohler.com USA or www.kohler.ca Canada.
3-27-2026 18:18 - US-CA

THE BOLD LOOK OF KOHLER.

Note: Customer Connection Pipe must have 2 NPT External Thread.

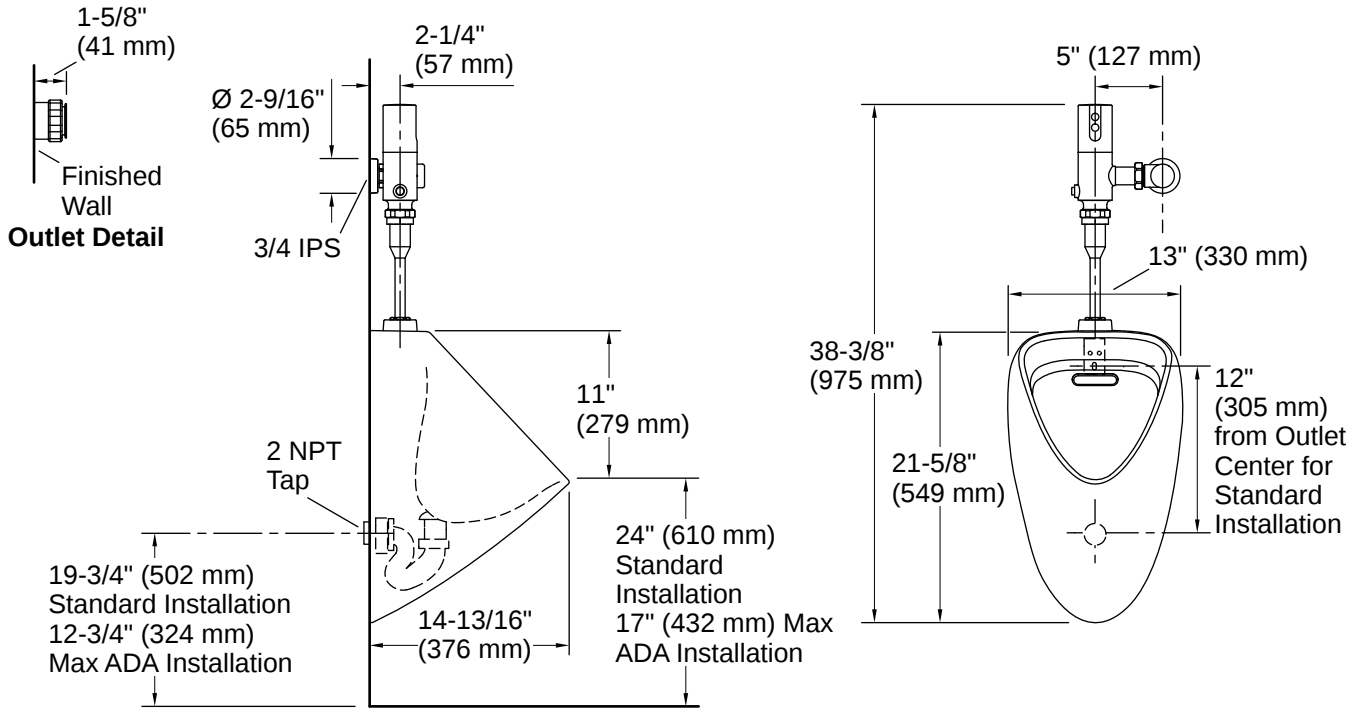

Installation Notes

Install this product according to the installation instructions.

Product dimensions are nominal and may vary per ASME A112.19.2 tolerances.
ADA compliant when installed to the specific requirements of these regulations.

1-800-4KOHLER (1-800-456-4537)
Kohler Co. reserves the right to make revisions without notice to product specifications.
For the most current specification sheet, go to www.kohler.com USA or www.kohler.ca Canada.
3-27-2026 18:18 - US-CA

THE BOLD LOOK OF KOHLER.