NO.OY0171-C INSTALLATION INSTRUCTION

Please Scan the QR code to watch the installation video. If you have any questions, please feel free to contact us through the order page.

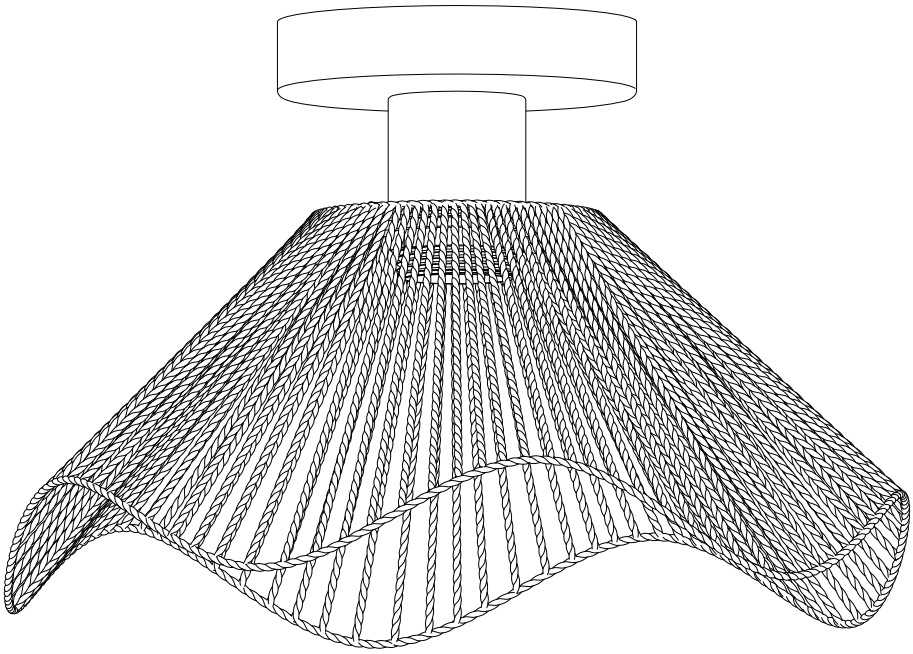

Standard:	**US & CA**	**EU & UK**
Rated Voltage:	AC 110V-120V 60Hz	AC 220V-240V 50Hz
Rated Power:	Max 60W	Max 60W
Bulb:	E26	E27
Dimension:	Ø11.8" X H7.7"	Ø30cm X H19.5cm

Warning!

1.Installation should be performed by a professional.

2.This light fixture operates within a 110V to 265V range only.

3.Do not install the light fixture in damp conditions.

4.To prevent electric shock, please turn off the power before installing, repairing, or cleaning the light fixture.

5.Keep the light fixture away from acidic and corrosive materials.

Components

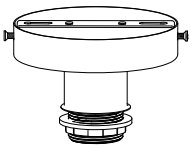

Lamp base

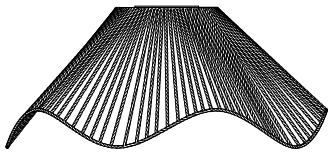

Lamp shade

US&CA	EU&UK
 X2	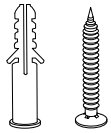 X2
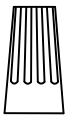 X3	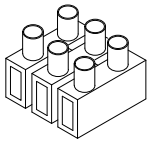 X1

Step 1

US&CA	EU&UK
 X3	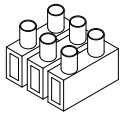 X1

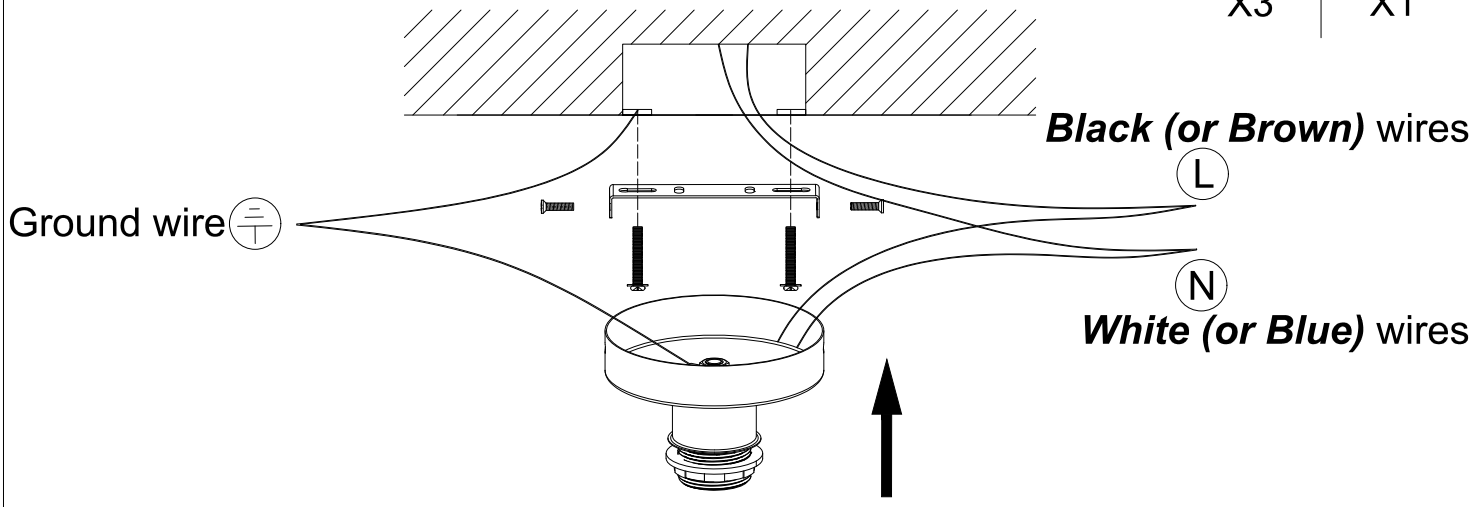

Step 2

