MOUNTING&WIRING

WARNING:

Improper installation may cause electrical shock, fire,or equipment damage. The person performing the installation must be familiar with the construction and operation of the product and associated hazards

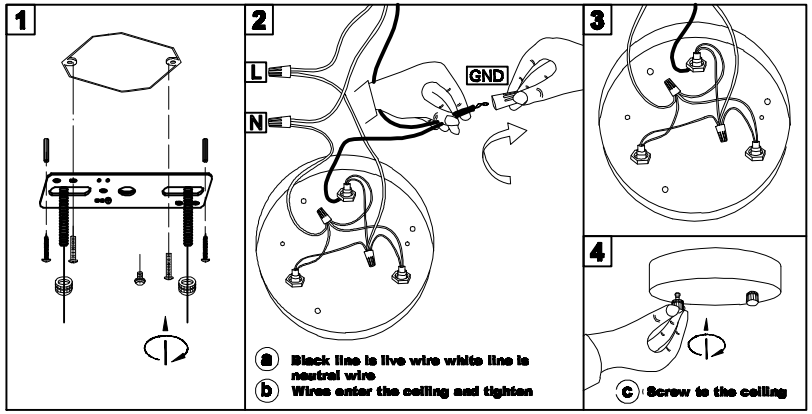

Wire Connection Diagram:

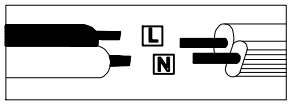

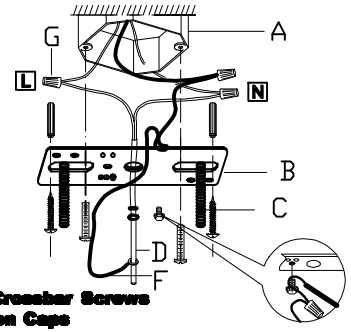

Please proceed in an alphabetical order:
A.Existing Electrical BOX B.Crossbar C.Crossbar Screws D.Ground Wire E.Canopy F.Wire G.Junction Caps attach the crossbar(B)to the existing electrical box(A) using the two crossbar screws(C)which are not supplied and should already in your box. Pass the main wire(F)and ground wire(D)through the canopy(E)and the crossbar(B)until the end of the main wire(F)reaches the electrical box
(A)where you can wire use electrician connections.Be sure when connecting the wire use electrician approved junction caps(G).stow the excess wire in the electrical box(A).raise the canopy(E),attach canopy(E)to ceiling,and hold the canopy(E).

DIMENSION

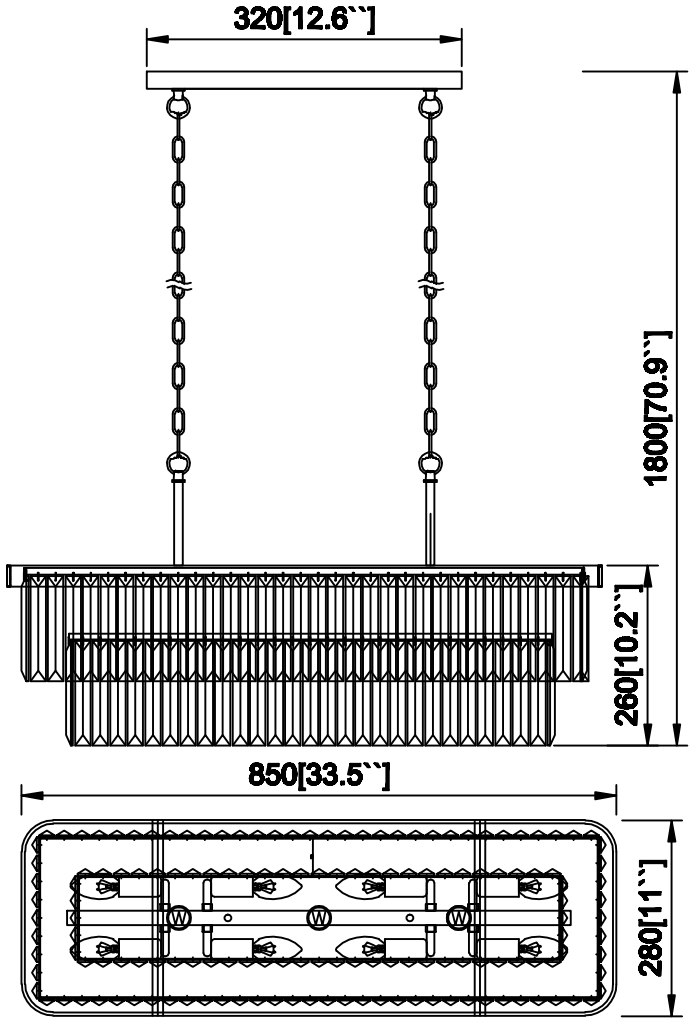

PART LIST

NO	①	②	③
COMPONENT		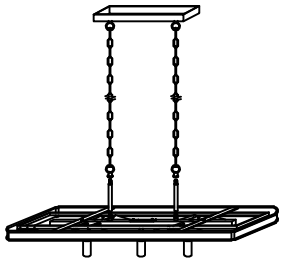	
QUANTITY	1	1	2

NO	⑥	⑦	
COMPONENT	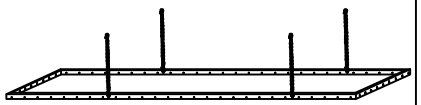		
QUANTITY	1	138	

INSTALLATION&MOUNTING INSTRUCTIONS

1

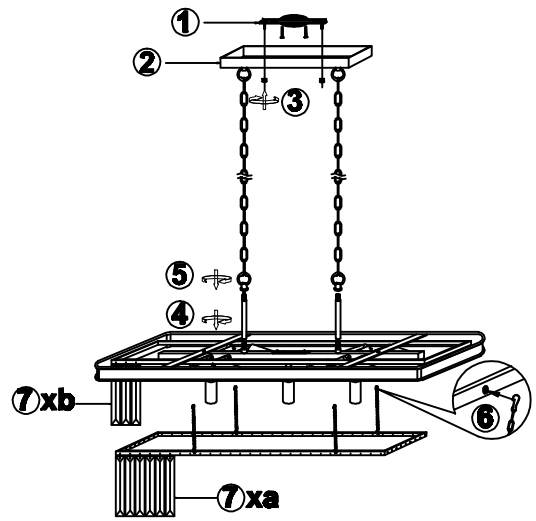

2

DIMMABLE:fully dimmable with compatible dimmer switch to create the perfect atmosphere

Type of Light Source: incandescent,LED or CFL Bulbs.Bulb base E12,60 watts maximum(not included)


E12


E12

