Gas Restaurant Ranges 6 Open Burners with oven

Model: GR-36

Intertek Intertek

☐ GR-36 Gas restaurant range 6 burners with gas oven

STANDARD FEATURES

- Stainless steel front, sides, back riser and shelf
- Cast iron open burner, each 30,000 BTU/hr
- Thermostat (250° F- 550° F) controlled oven
- Welded frame structure for best stability
- Standby S/S pilot for easy start
- Adjustable heavy duty legs
- 12" x12"(30x30cm) cast iron grate
- Anti-clogging pilot cover under the grate
- A pull-out crumb tray with angled handle in the front
- U shape oven burner with 31,000 BTU/hr
- Thermal coupling safety valve for the oven
- Stainless steel oven door with good insulation
- Stainless steel handle for bottom oven
- Kick plate at the bottom for easy access for servicing
- 3/4" NPT rear gas connection
- One year limited parts and labor warranty

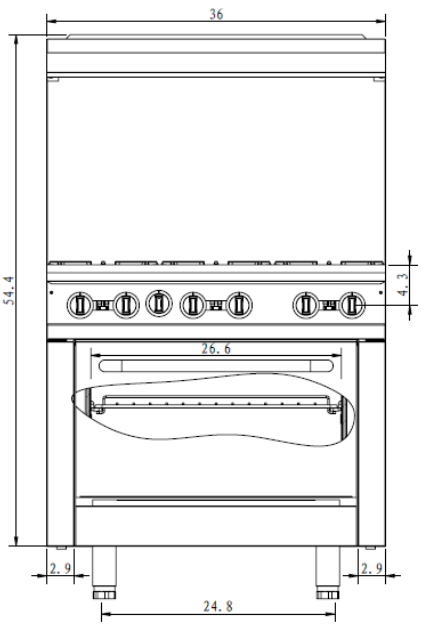

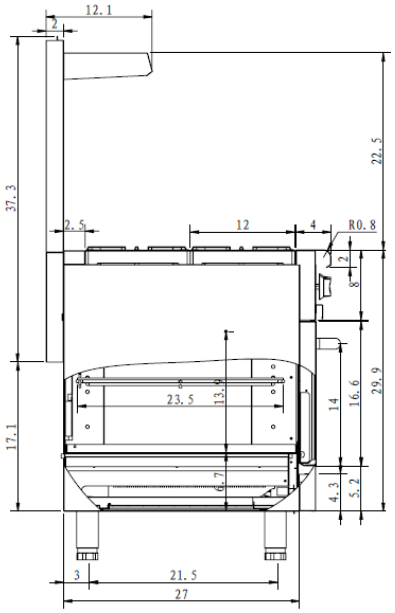

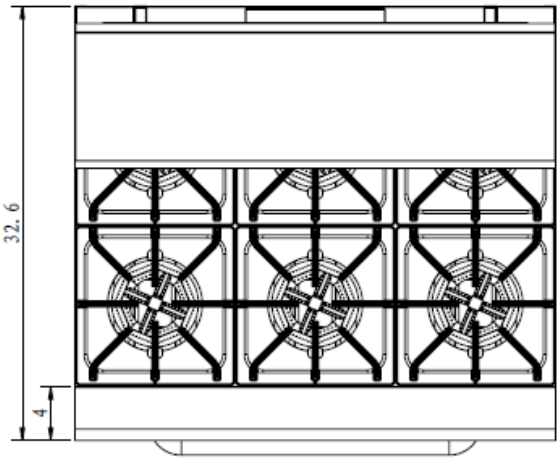

Model	Description	Oven dimension	Total BTU/HR	Packing Size(IN)	N/W (LB)	G/W (LB)
GR-36	Gas range with oven	26.6x23.5x13.9	211,000	41x40x44	368	456

SABA

3390 Enterprise Ave., Hayward, CA 94545

Toll Free: +1 (844) 422-8900 Telephone: +1 (510) 293-0189 Fax: +1 (510) 293-0199

http://sabacorpusa.com/