KB1480,1,2,5,7,8BL
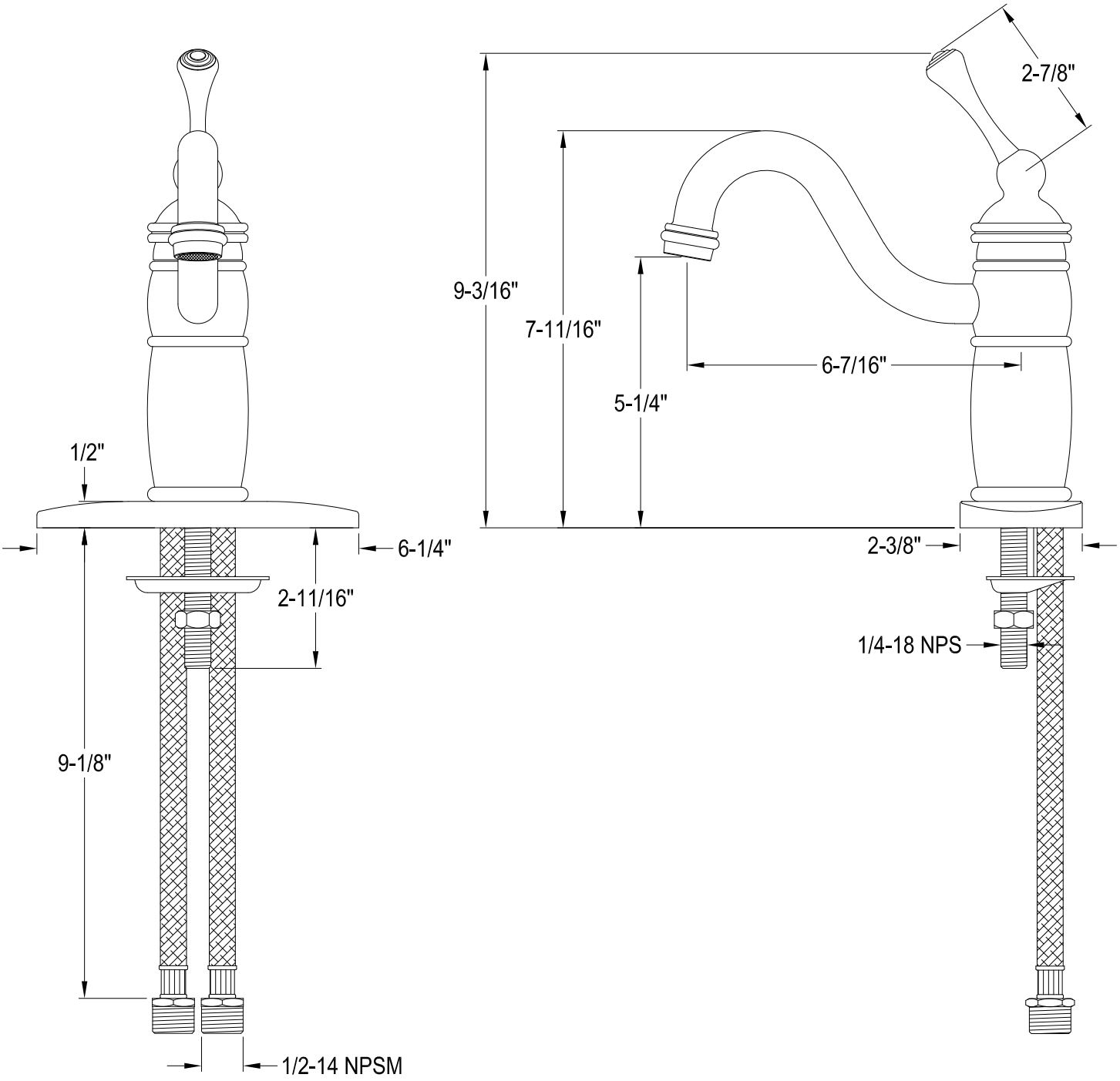
Single Handle Bar Faucet