KOHLER. Faucets

8" rainhead, 1.75 gpm
K-13692-G

Features
- Single-function rainhead
- MasterClean™ sprayface features an easy-to-clean surface that withstands mineral buildup and maximizes spray performance
- Optimized sprayface for maximum performance
- 1.75 gpm (6.6 lpm) maximum flow rate

Material
- Solid-brass construction for durability and reliability

Technology
- Katalyst® air-induction technology infuses water with air, creating bigger drops for a more powerful spray

Installation
- 1/2" -14 NPT connection

Optional Products/Accessories
K-7394 6" ceiling-mount single-function rainhead arm & flange



Codes/Standards
ASME A112.18.1/CSA B125.1
DOE - Energy Policy Act 1992
EPA WaterSense®
California Energy Commission (CEC)

KOHLER® Faucet Lifetime Limited Warranty
See website for detailed warranty information.

Available Colors/Finishes
Color tiles intended for reference only.

Color	Code	Description
	SN	Vibrant® Polished Nickel
	AF	Vibrant® French Gold
	BV	Vibrant® Brushed Bronze
	BL	Matte Black
	TT	Vibrant Titanium
	DR	Deep Bronze

KOHLER. Faucets

8" rainhead, 1.75 gpm
K-13692-G

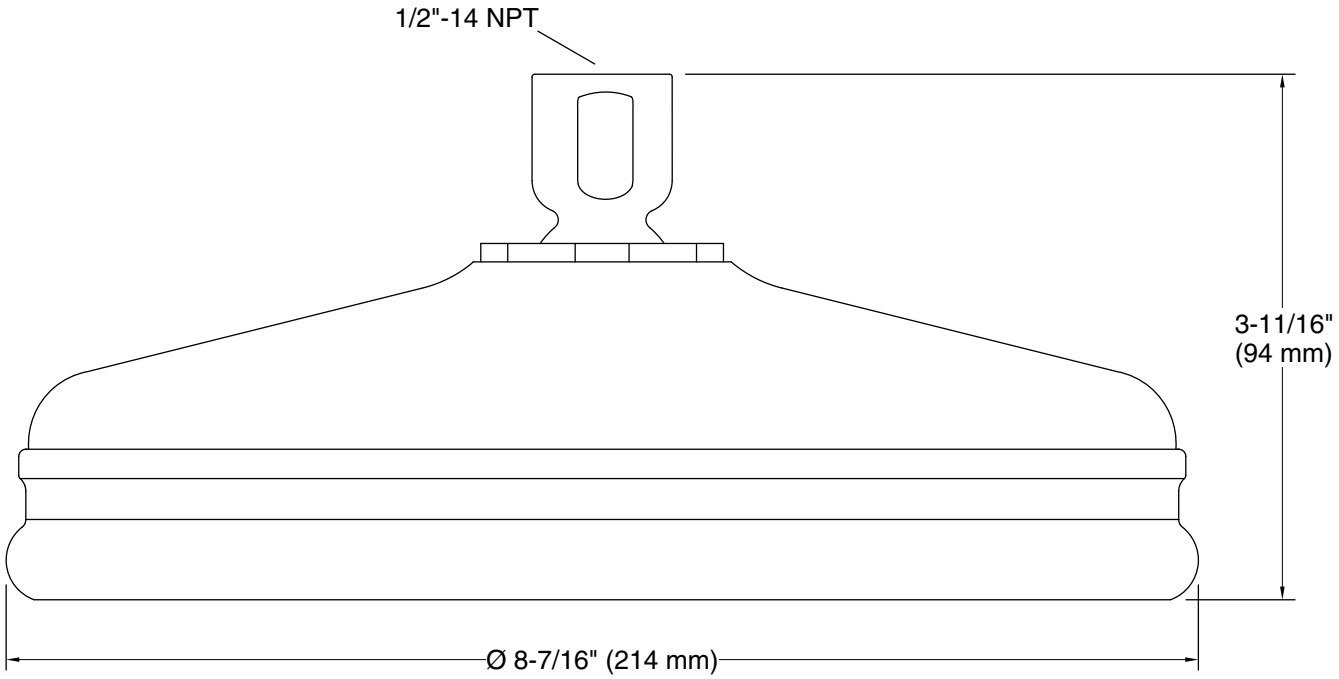

Technical Information

All product dimensions are nominal.

Spout:

Shower/Rainhead rated max flow: 1.75 gal/min (6.6 l/min)

Notes

For use with automatic compensating valves rated at 1.5 gal/min (5.7 l/min) or less.

Install this product according to the installation instructions.