Reach™ Curv | K-23188-HC

Hidden cord one-piece compact elongated toilet with skirted trapway, dual-flush

Features

- One-piece toilets integrate the tank and bowl into a seamless, easy-to-clean design
- Compact elongated bowl offers added comfort while occupying the same space as a round-front bowl
- Standard height
- Top-mount dual-flush actuator offers a choice of 0.8 or 1.28 gpf (3.0 or 4.8 lpf)
- 2" (51 mm) glazed trapway
- Fully skirted trapway simplifies cleaning
- Hidden cord design conceals bidet seat cords (bidet seat sold separately)
- Alternative option available: Reach Curv with nonhidden cord design (K-23188)
- Includes bidet water inlet hose



Sustainability

Available Colors/Finishes

Color tiles intended for reference only.

	0	White
	7	Black Black

1-800-4KOHLER (1-800-456-4537)
Kohler Co. reserves the right to make revisions without notice to product specifications.
For the most current specification sheet, go to www.kohler.com USA or www.kohler.ca Canada.
3-27-2026 16:39 - US-CA

Codes/Standards

Accessibility standards may require controls to be located on the open side of the toilet.
Plumbing codes may require elongated toilets and elongated, open-front seats in public bathrooms.

ASME A112.19.2/CSA B45.1
ASME A112.19.14
DOE - Energy Policy Act 1992
EPA WaterSense®
California Energy Commission (CEC)

Technical Information

Rough-in:	Standard 12" (305mm)
Flush Type:	Class Five
Flush Rate:	0.8 or 1.28 gpf (4.8 lpf)
Bowl Shape:	Elongated
Seat-Mounting Holes:	5-1/2" (140 mm)
Waste Outlet:	Floor
Trapway Size:	2" (51 mm)
Trapway Type:	Skirted
Water Surface Size:	7-3/4" x 5-3/4" (197 mm x 146 mm)
Rim to Water Surface:	5-13/16" (148 mm)

Pressure/Fixture Supply Requirements

Minimum Flowing Pressure:	15 psi (103.4 kPa)
Minimum Flow Rate:	1 gpm (3.8 l/min)

Recommended Products/Accessories

1265114 12" Toilet Supply Line

1023457 Toilet Wax Ring And Hardware Kit

K-28821 Elongated bidet toilet seat with remote control

K-8298-CR Elongated bidet toilet seat with remote control

K-26132-CSP Elongated bidet toilet seat

Warranty

See website for detailed warranty information.

KOHLER® Toilets and Seats Limited Warranty

1-800-4KOHLER (1-800-456-4537)
Kohler Co. reserves the right to make revisions without notice to product specifications.
For the most current specification sheet, go to www.kohler.com USA or www.kohler.ca Canada.
3-27-2026 16:39 - US-CA

THE BOLD LOOK OF KOHLER.

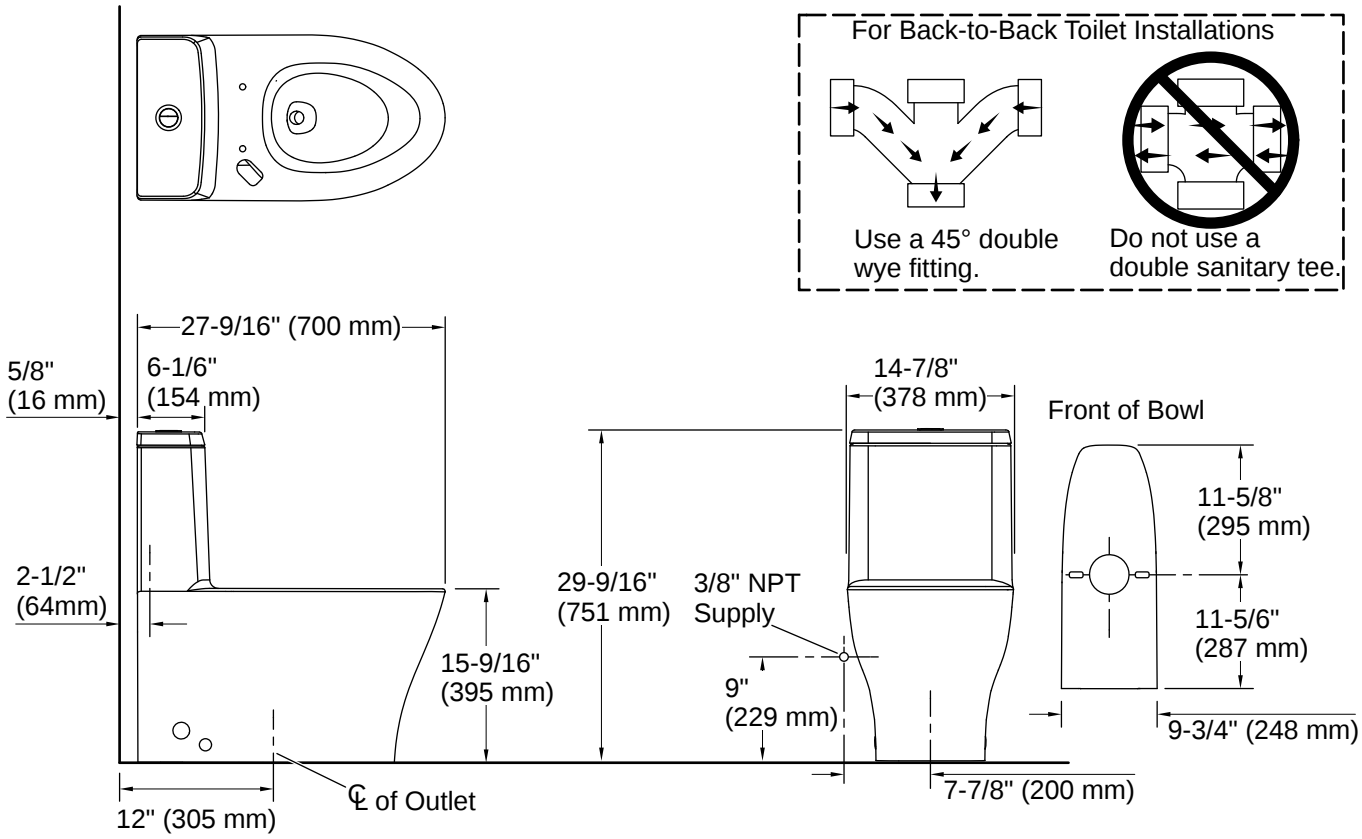

Installation

- Standard 12" (305 mm) rough-in
- Supply line sold separately
- Seat sold separately

Installation Notes

Install this product according to the installation instructions.

Product dimensions are nominal and may vary per ASME A112.19.2 tolerances.

1-800-4KOHLER (1-800-456-4537)
Kohler Co. reserves the right to make revisions without notice to product specifications.
For the most current specification sheet, go to www.kohler.com USA or www.kohler.ca Canada.
3-27-2026 16:39 - US-CA

THE BOLD LOOK OF KOHLER.