FINE FIXTURES

206 Wembly Road
New Windsor, NY 12553
Phone: 718.602.6060
Fax: 718.963.2082
info@finefixtures.com
www.finefixtures.com

INSTALLATION INSTRUCTIONS

NEO ANGLE
SHOWER BASE

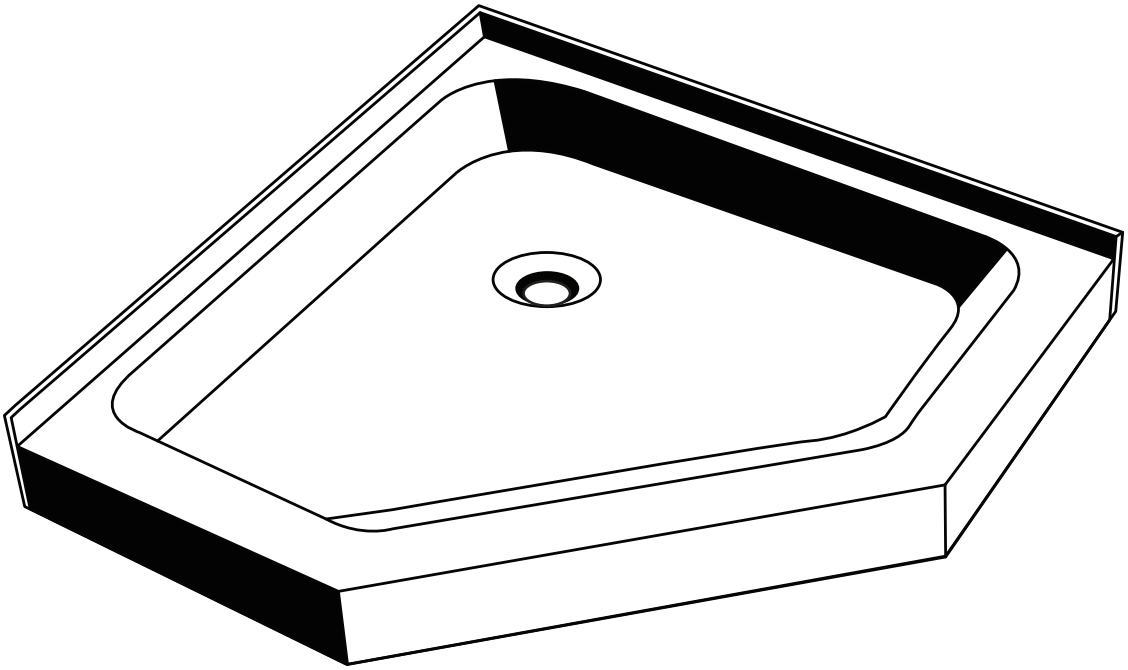

MODEL # SBA-NA

FINE FIXTURES

206 Wembly Road
New Windsor, NY 12553
Phone: 718.602.6060
Fax: 718.963.2082
info@finefixtures.com
www.finefixtures.com

READ ALL INSTRUCTIONS BEFORE UNPACKING THE PRODUCT

INSTRUCTIONS THAT, IF IGNORED, COULD RESULT IN DEATH OR SERIOUS INJURY CAUSED BY INCORRECT HANDLING OR INSTALLATION OF THE PRODUCT. THESE INSTRUCTIONS MUST BE OBSERVED FOR SAFE INSTALLATION.

CAUTION! TWO PERSON LIFT REQUIRED

TWO (2) PEOPLE ARE REQUIRED TO LIFT DURING ENTIRE INSTALLATION PROCESS OF THIS PRODUCT.

INSTALLATION OF THIS PRODUCT BY AN INEXPERIENCED INSTALLER MAY RESULT IN PERSONAL INJURY OR DEATH!

We reserves the right to change, update, modify, alter, redesign this manual/product or its policies without prior notice!
It is your responsibility to visit the website to download or contact customer service for the most updated version of the installation instructions.

We shall not be liable for any injuries or property damages in connection with this product during installation or use of this product!

- **Limited warranty is void on any commercial installation.**
- **We are not responsible for local code compliance for this product.**
- **Building and plumbing codes may vary from state-to-state in accordance to your location.**
- **We are not responsible for providing any compliance certifications.**
- **We are not responsible to provide any type of certifications for this product.**
- **Under no circumstances we shall not be liable for any and all incidental damages sustained in connection with this product Neither manufacture, nor distributor, nor retailer is responsible for water damage or flood caused due to use of this product.**
- **Under no circumstances We shall not be liable for any and all fees, cost of installation/reinstallation/removal, subsequent damage or transportation in case of the product defect.**

TOOLS REQUIRED

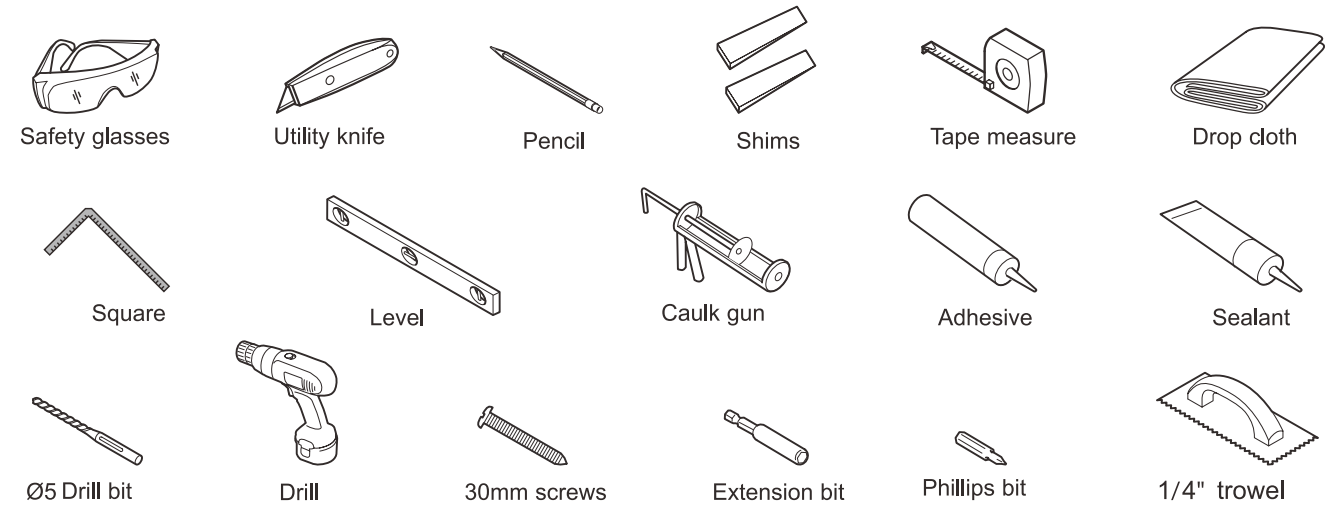

Lumber for additional wall studs if installing wall set; refer to wall set installation instructions

TIP : You may want to install insulation

FINE FIXTURES

206 Wembly Road
New Windsor, NY 12553
Phone: 718.602.6060
Fax: 718.963.2082
info@finefixtures.com
www.finefixtures.com

REQUIREMENTS FOR A SUCCESSFUL INSTALLATION

DO NOT: Use drywall screws to secure flanges to wall studs. Product damage will occur and will void the warranty. Entire bottom must be in contact with a flat, level surface.

1. Read complete instructions before beginning installation.
2. Confirm that your model will fit in intended location and plumbing fixtures are located where required before beginning installation.
3. Walls and sub-floor must be solid, plumb, and square.
4. If installation surface is not level, use leveling compound or mortar bed for proper installation.
5. Use drop cloth to protect bathtub from damage during installation.
6. Two people recommended to install this product.

ROUGHING-IN

* Rough plumbing must be installed before bathtub installation.

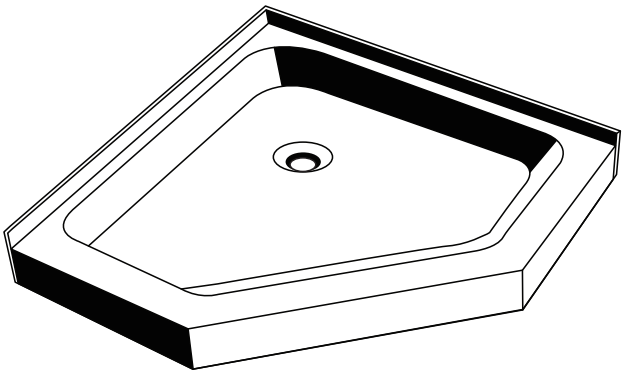

Right side plumbing rough-in shown

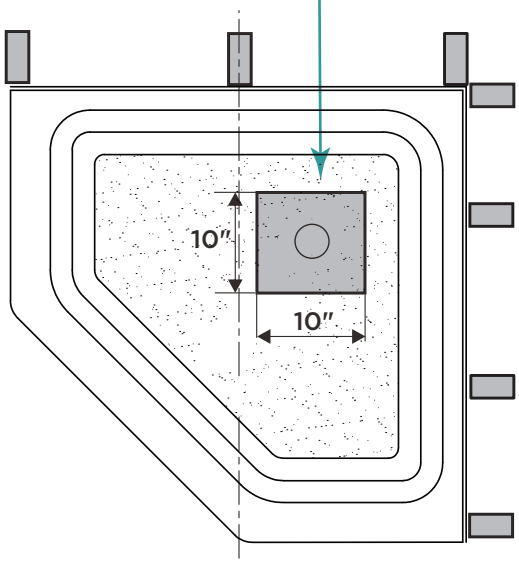

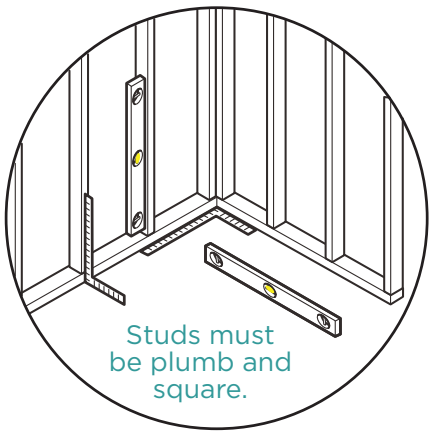

206 Wembly Road
New Windsor, NY 12553
Phone: 718.602.6060
Fax: 718.963.2082
info@finefixtures.com
www.finefixtures.com

STEP 1

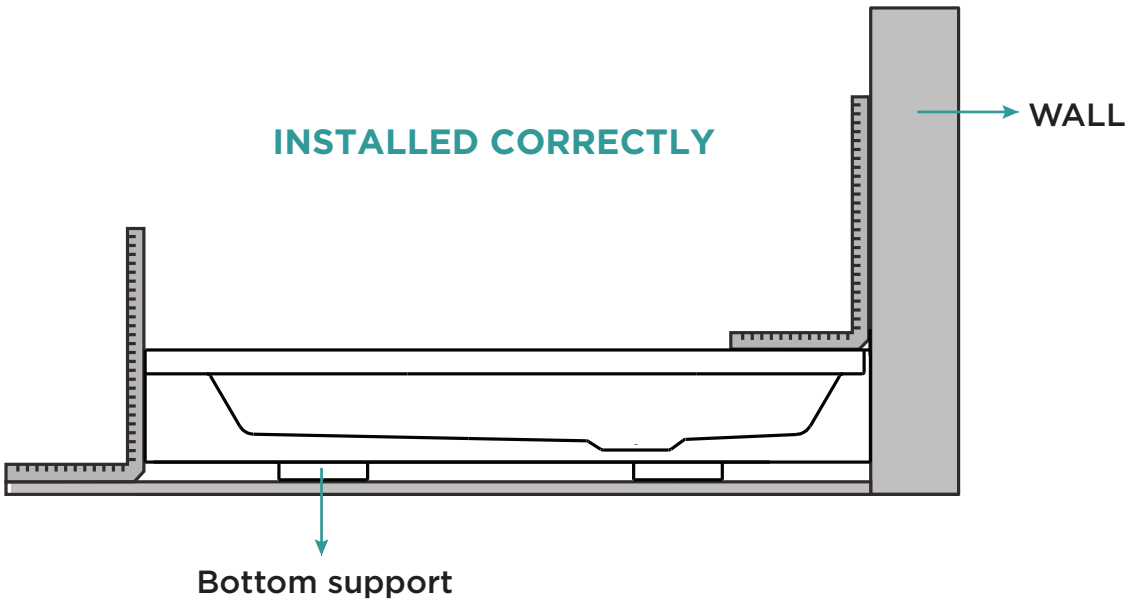

To ensure base is installed correctly, entire bottom support must contact a flat, level surface.

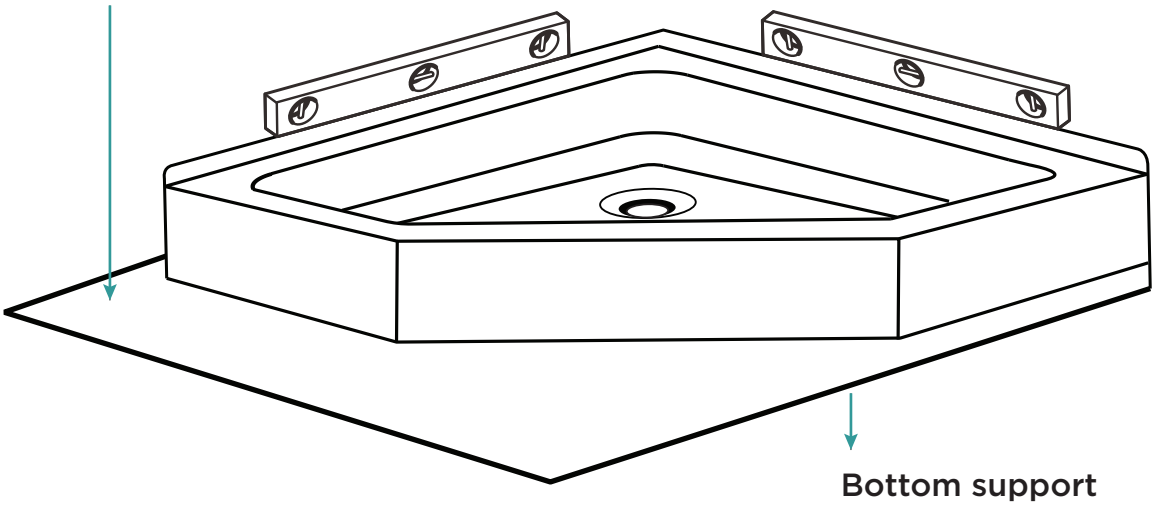

206 Wembly Road
New Windsor, NY 12553
Phone: 718.602.6060
Fax: 718.963.2082
info@finefixtures.com
www.finefixtures.com

STEP 2

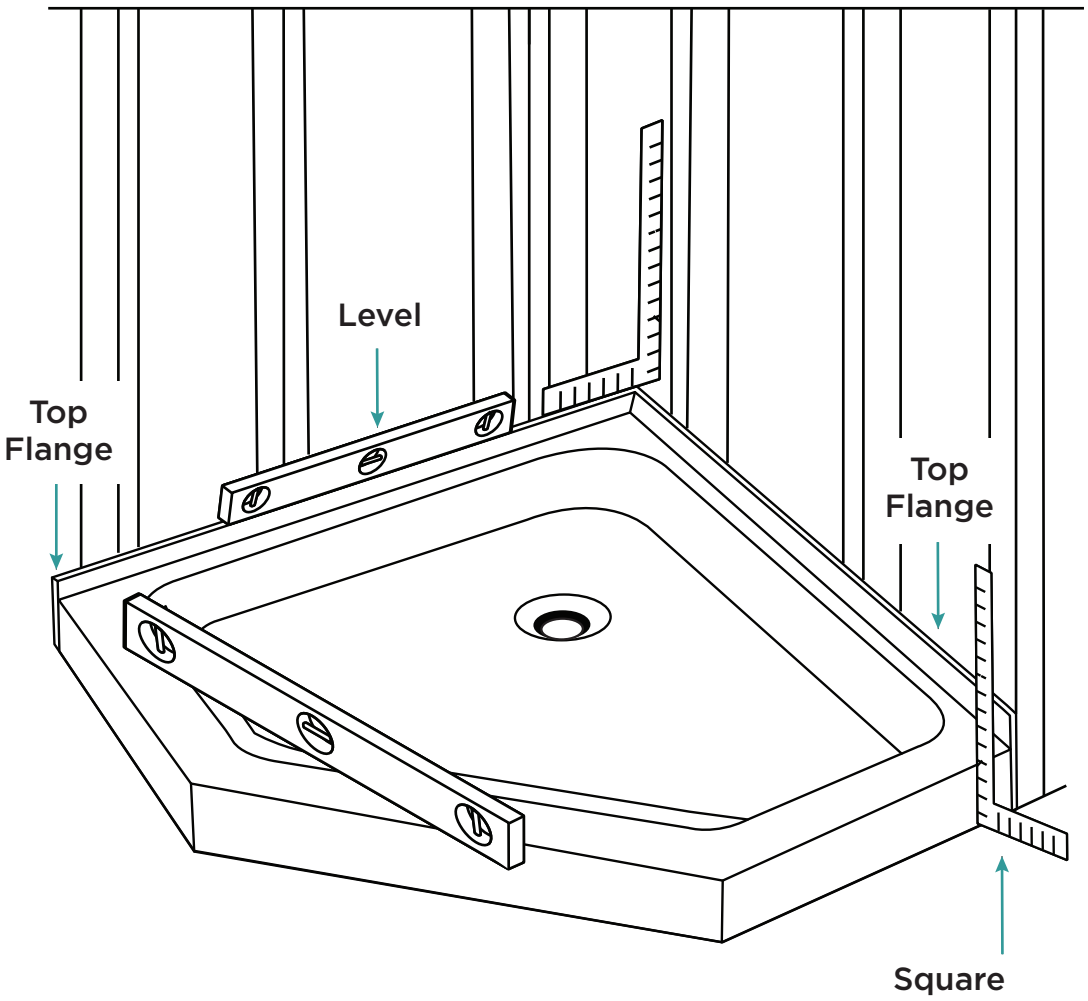

- Do not install the product with any air gaps under the bottom support or product damage will occur.
- TIP: If installation surface is not leveled, use leveling compound or mortar bed for proper installation.

206 Wembly Road
New Windsor, NY 12553
Phone: 718.602.6060
Fax: 718.963.2082
info@finefixtures.com
www.finefixtures.com

STEP 3

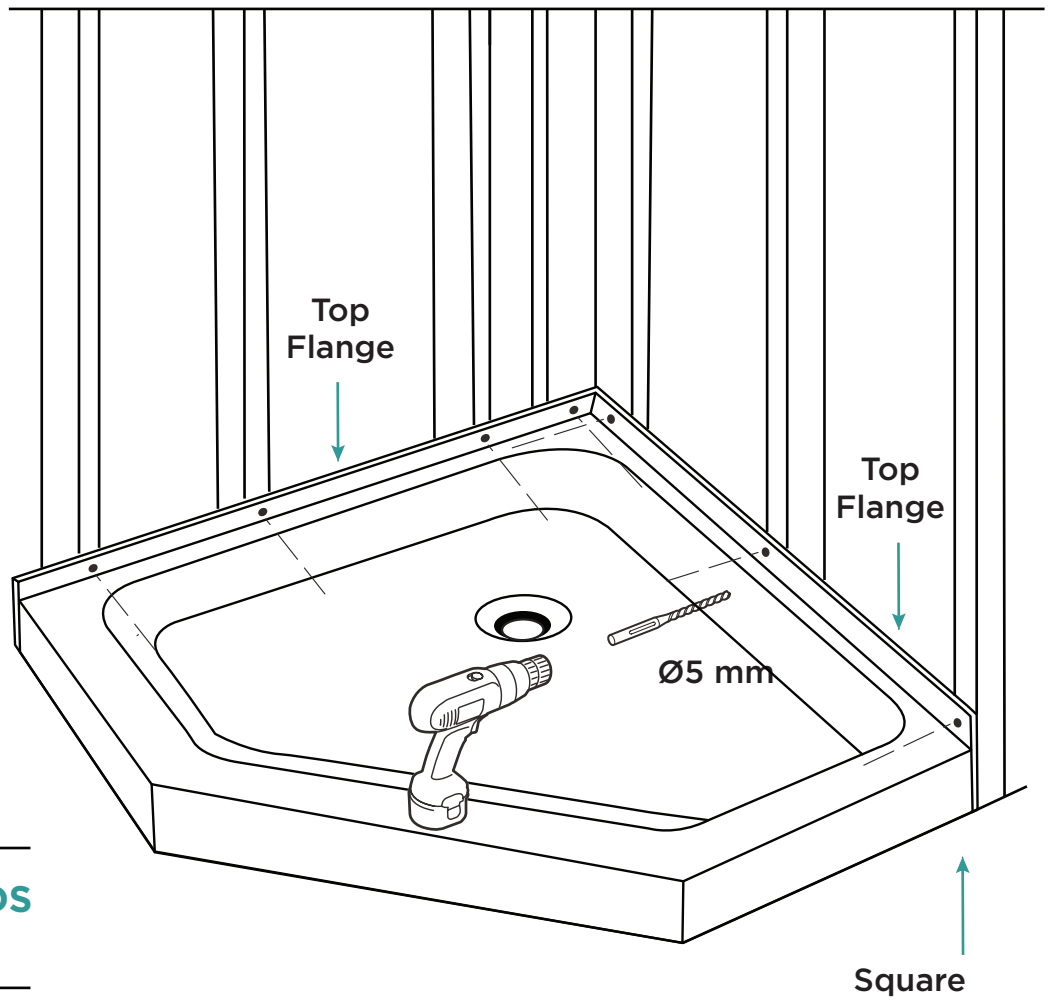

MARK STUDS LOCATION

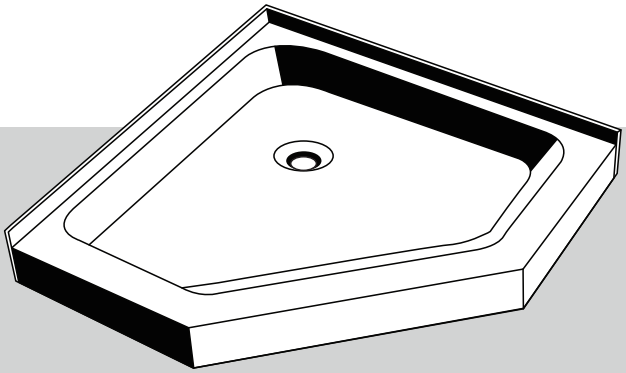

Plumber's putty will degrade Base material. Do not use plumber's putty to seal between drain and base. Use latex/acrylic sealant or a gasket.

206 Wembly Road
New Windsor, NY 12553
Phone: 718.602.6060
Fax: 718.963.2082
info@finefixtures.com
www.finefixtures.com

STEP 4

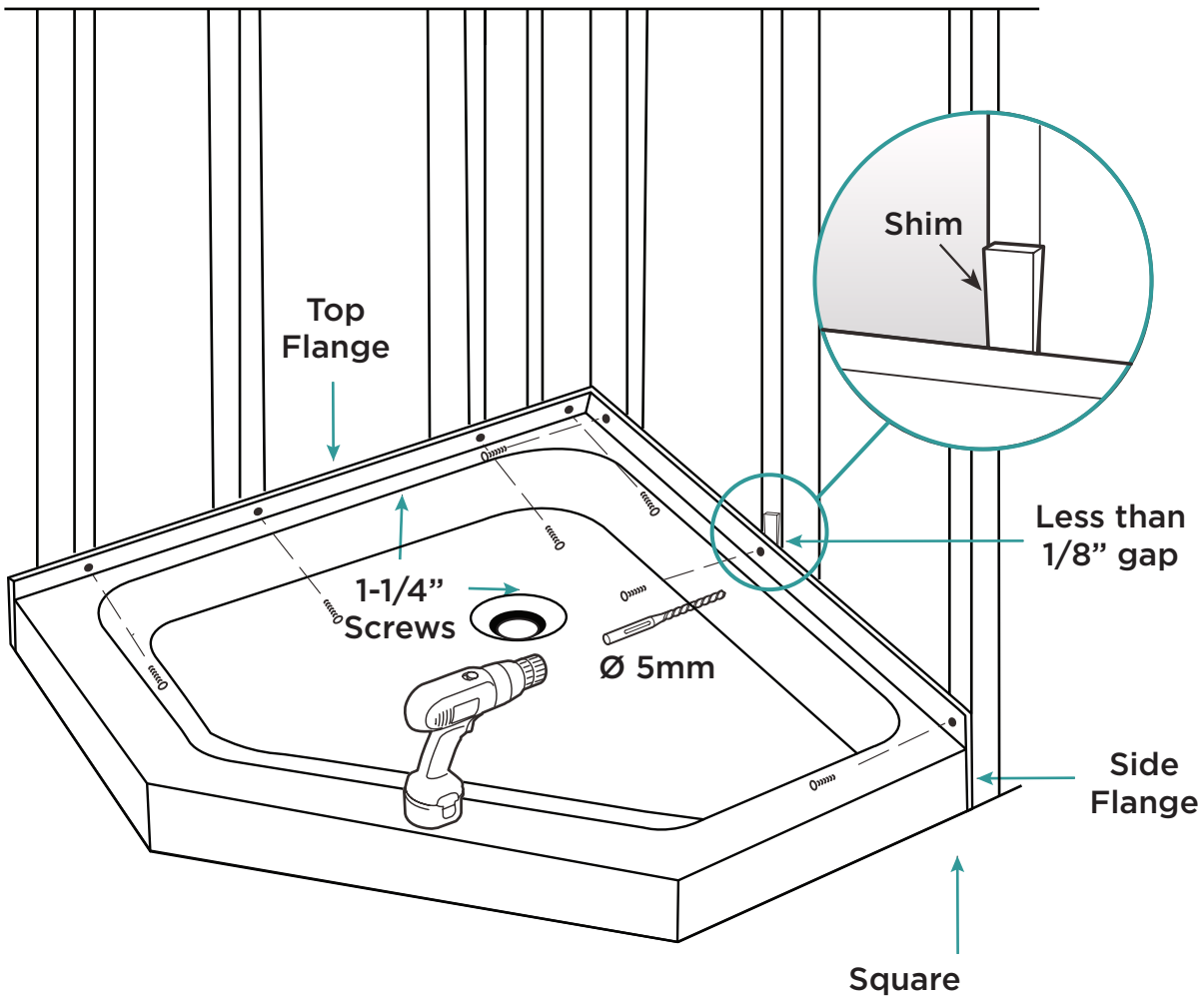

TIP: Place drop cloth in bathtub and stand inside bathtub to press it to floor when securing to wall studs.

RETAIN THIS INSTALLATION MANUAL
FOR FUTURE REFERENCE.

Thank you for choosing FINE FIXTURES.