ASSEMBLY INSTRUCTIONS - SINK BASE CABINET

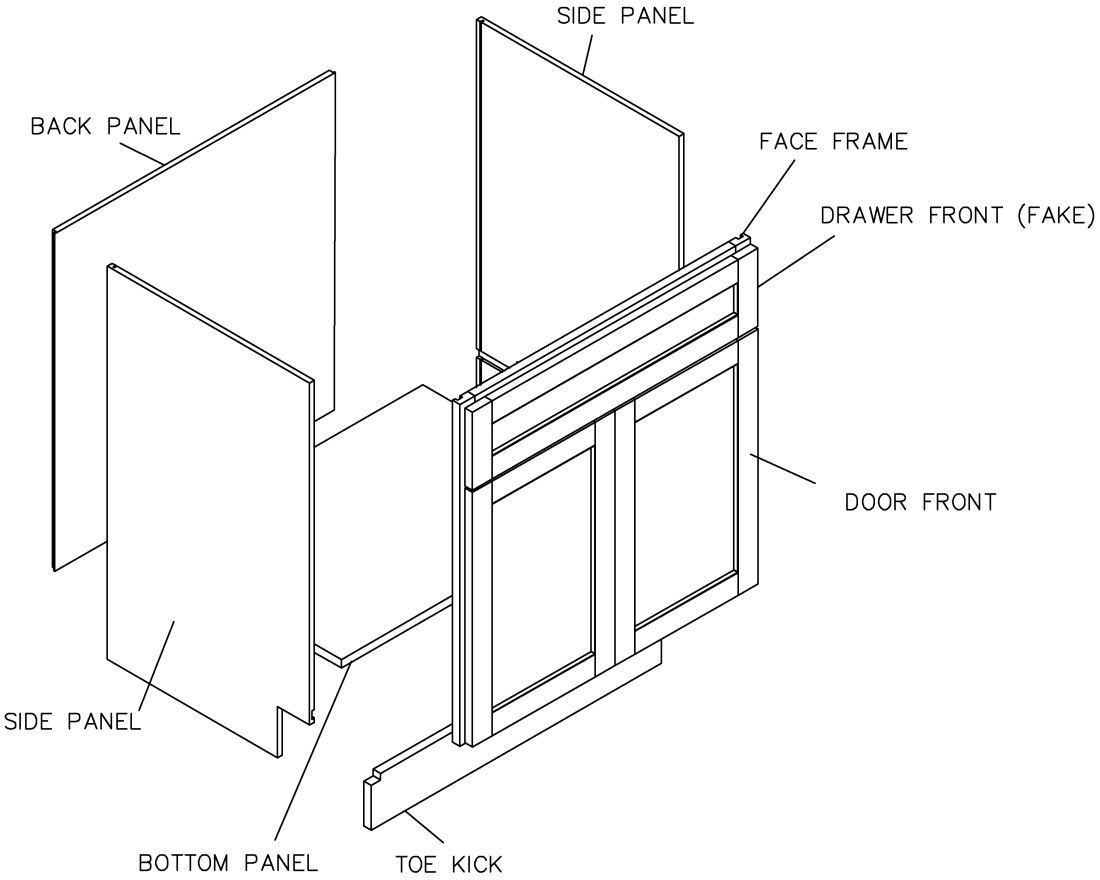

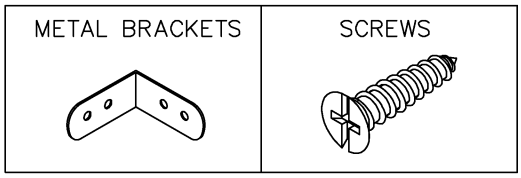

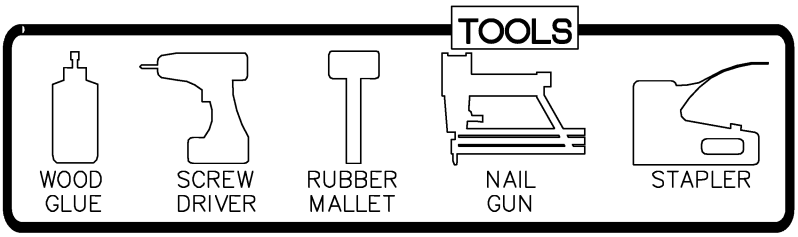

This instruction applies to the following items:
SB30 (Single false drawer)
SB36 (Double false drawers)

ASSEMBLY INSTRUCTIONS - FARM SINK BASE CABINET

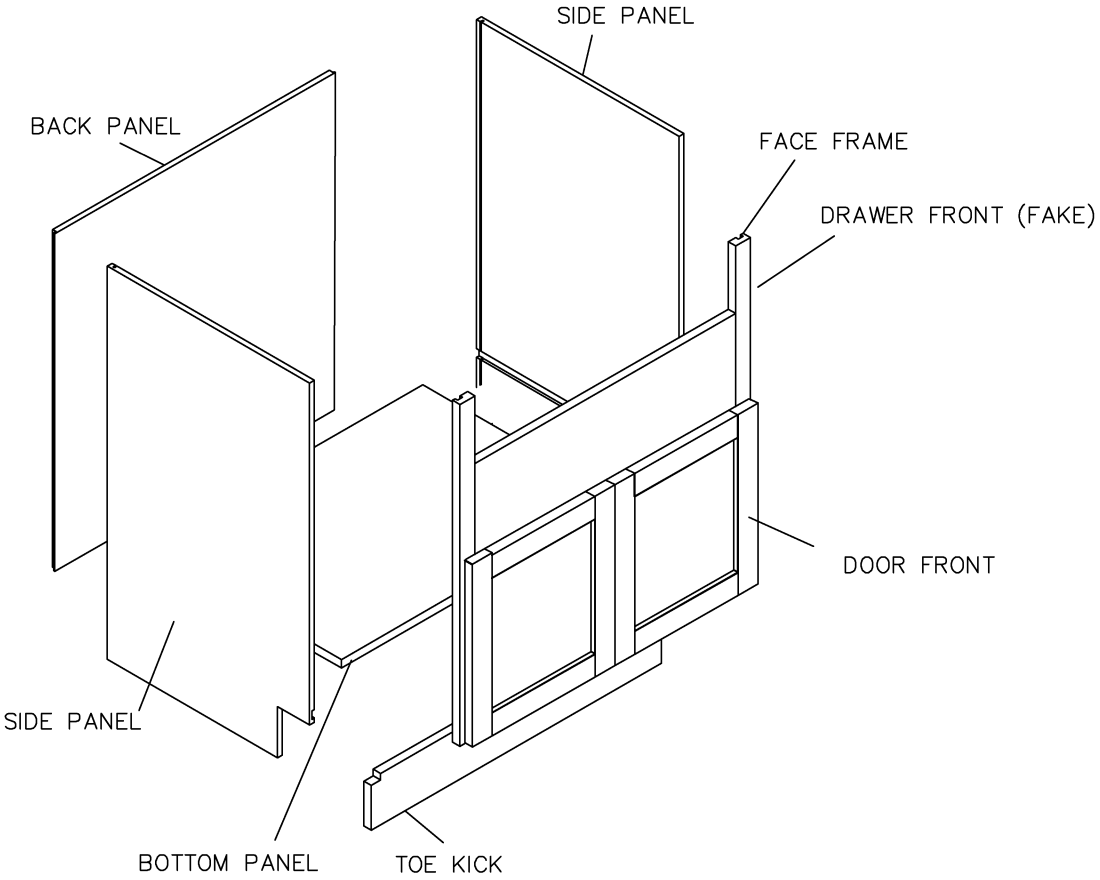

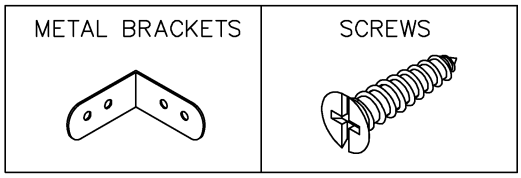

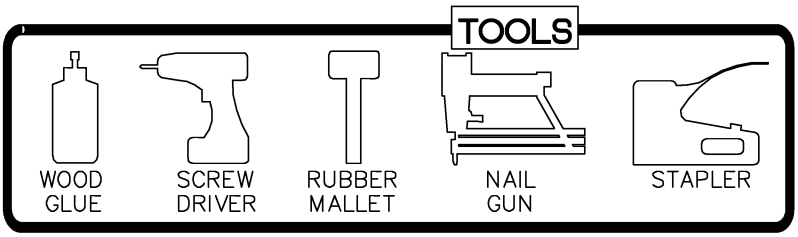

This instruction applies to the following items:
FSB36

STEP 1

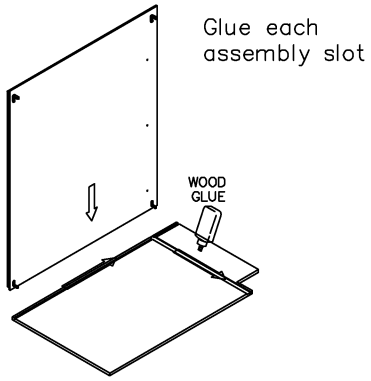

STEP 2

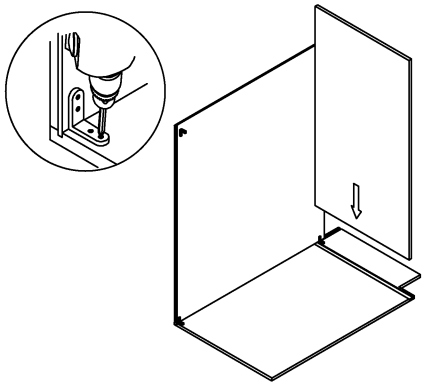

STEP 3

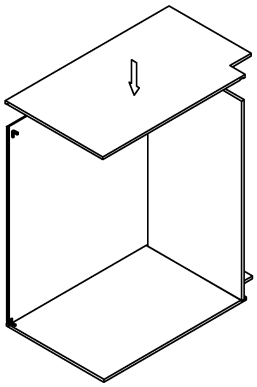

STEP 4

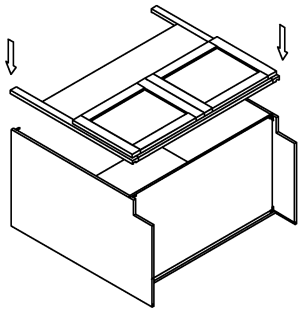

STEP 5

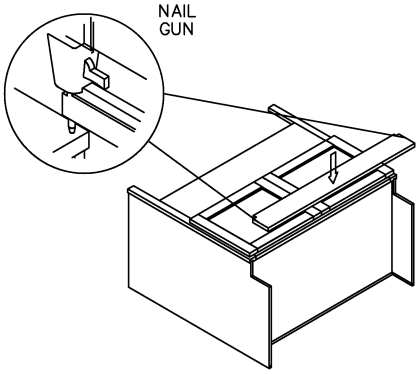

STEP 6

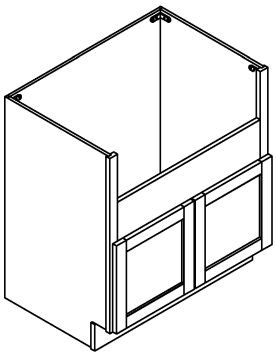

ASSEMBLY INSTRUCTIONS - FULL DOOR BASE CABINET

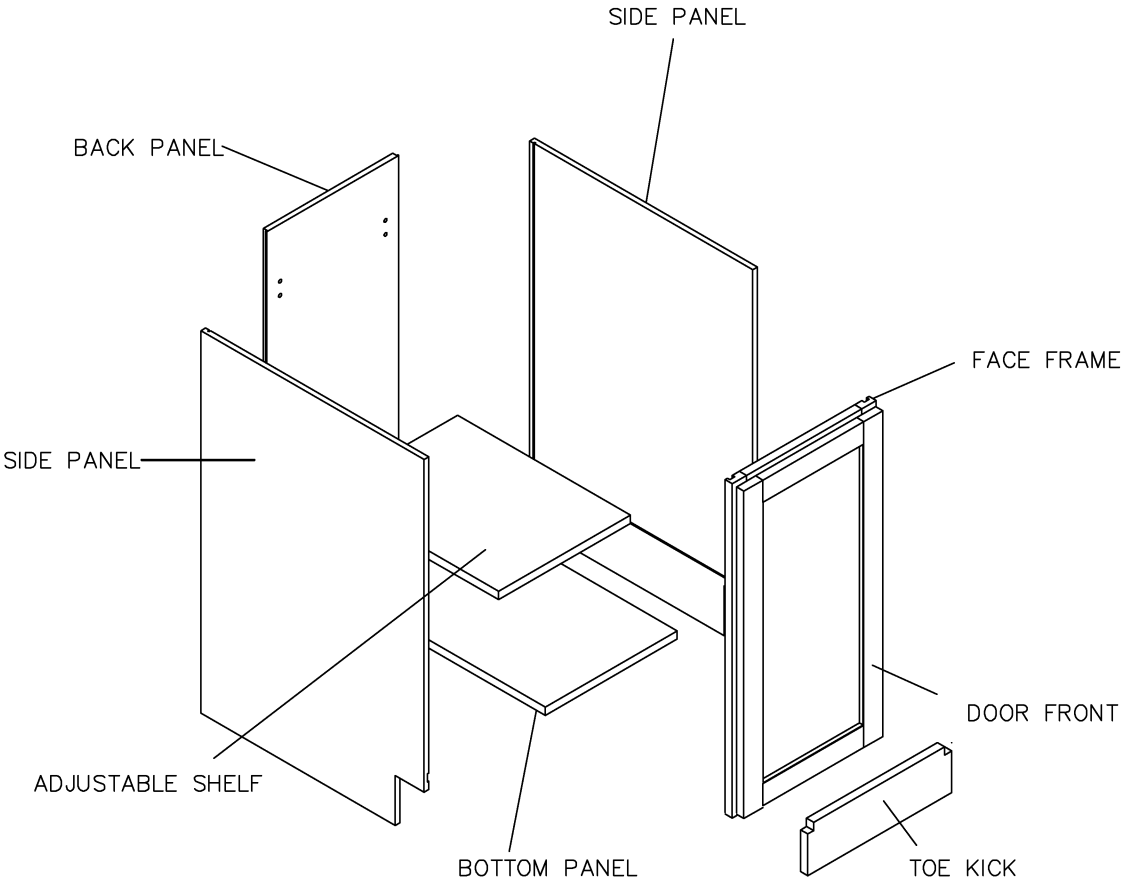

METAL BRACKETS	SCREWS	SHELF CLIPS	GLIDE SUPPORTS
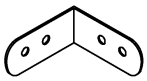	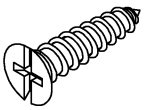		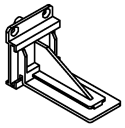

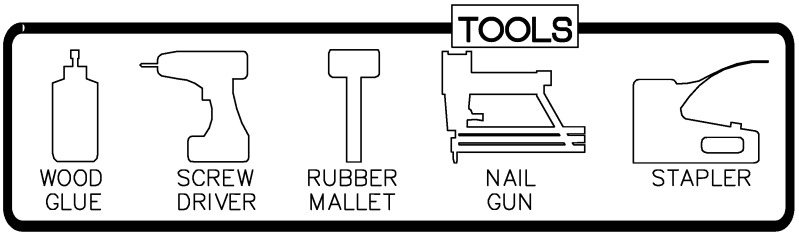

This instruction applies to the following items:
FDB18-FDB36

STEP 1

Glue each assembly slot

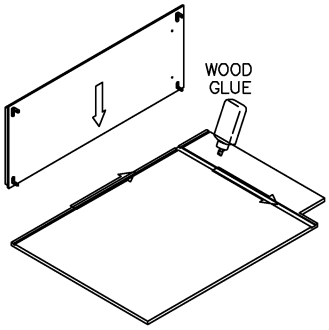

STEP 2

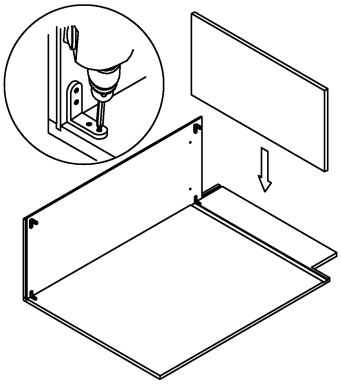

STEP 3

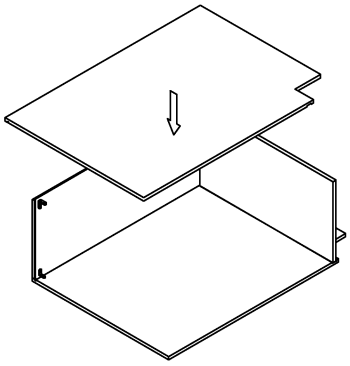

STEP 4

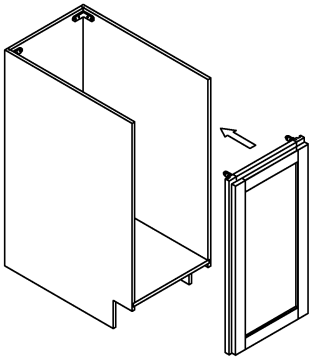

STEP 5

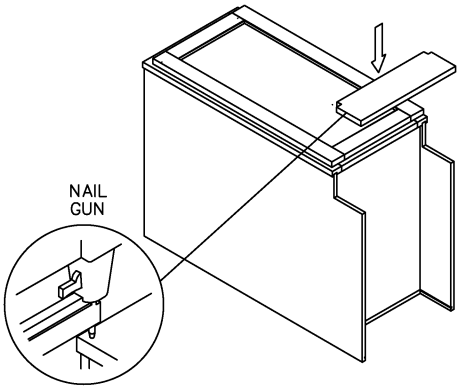

STEP 6

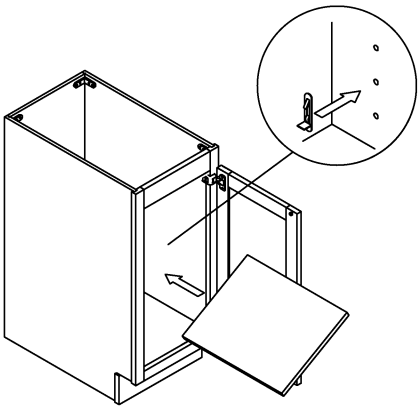

STEP 7

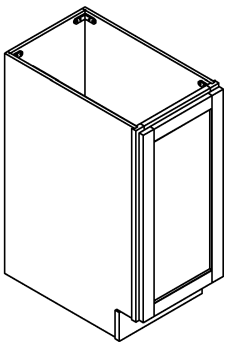

STEP 8

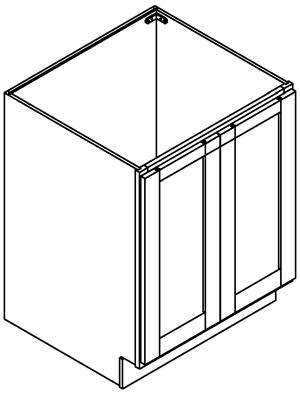

ASSEMBLY INSTRUCTIONS - BASE CABINET

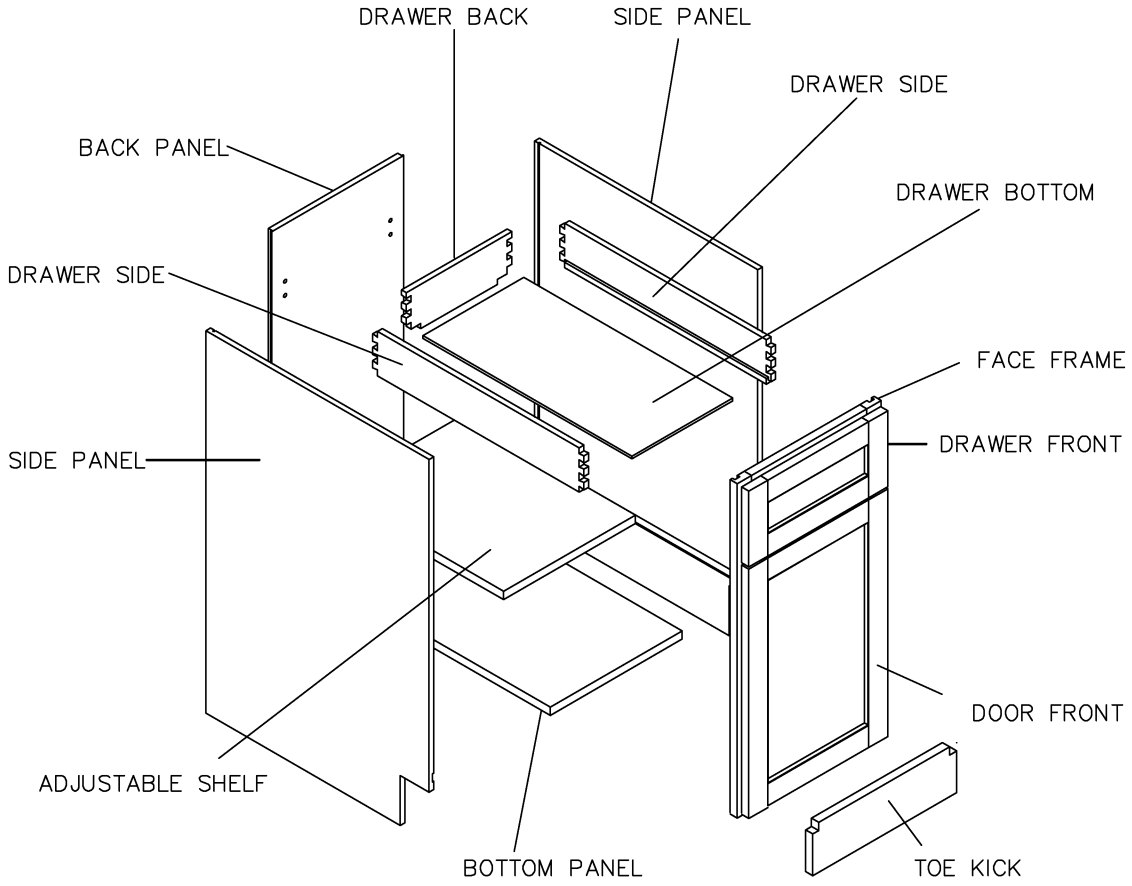

GLIDES	METAL BRACKETS	SCREWS	SHELF CLIPS	GLIDE SUPPORTS
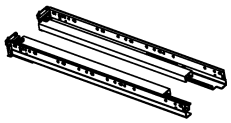	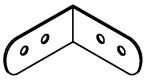	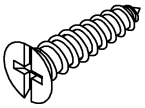		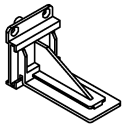

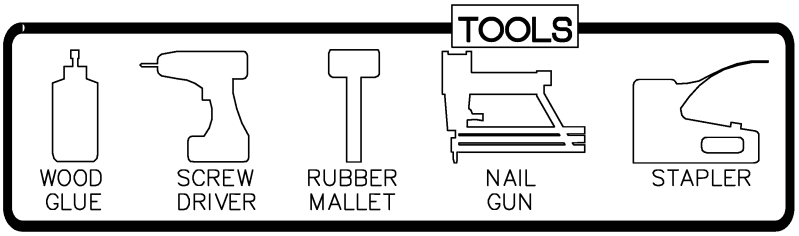

This instruction applies to the following items:
B09、B12、B15、B18、B21、B24、
B27、B30、B33、B36、B39、B42

STEP 1

Glue each assembly slot

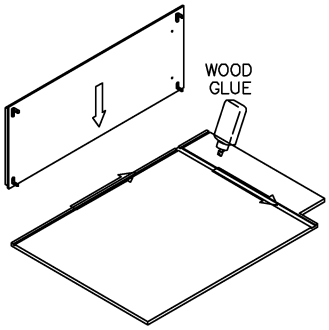

STEP 2

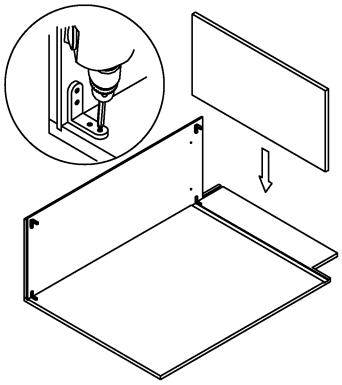

STEP 3

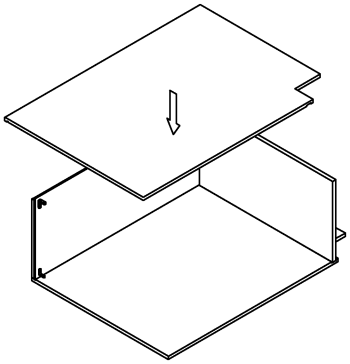

STEP 4

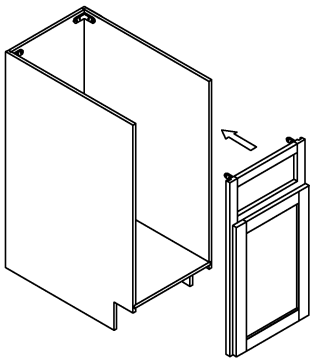

STEP 5

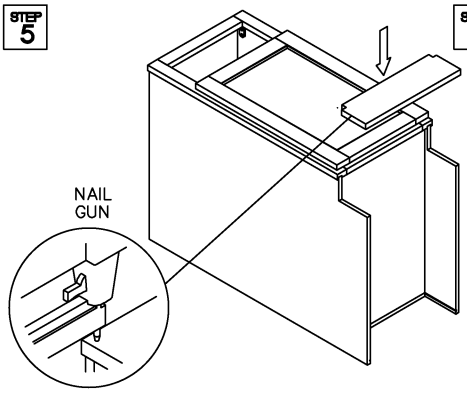

STEP 6

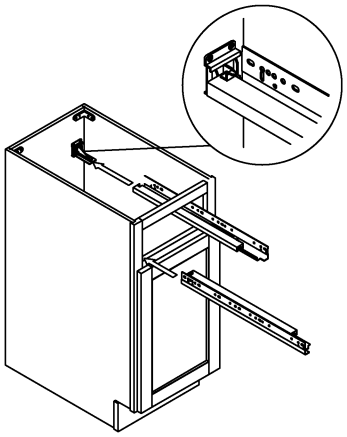

STEP 7

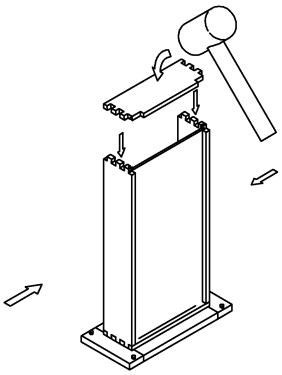

STEP 8

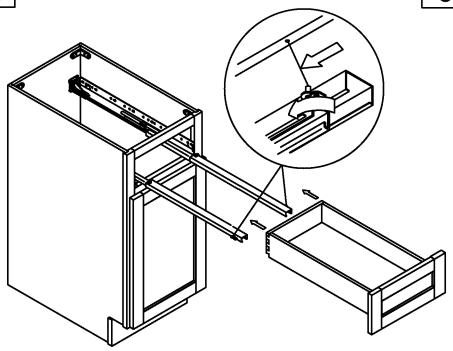

STEP 9

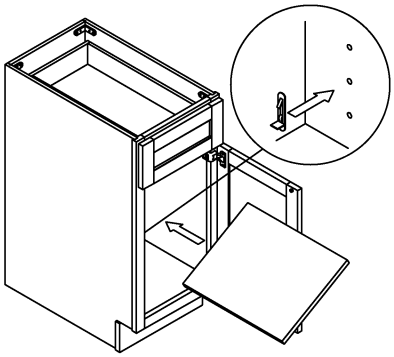

STEP 10

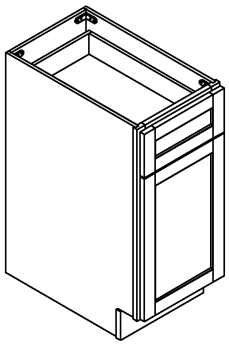

STEP 11

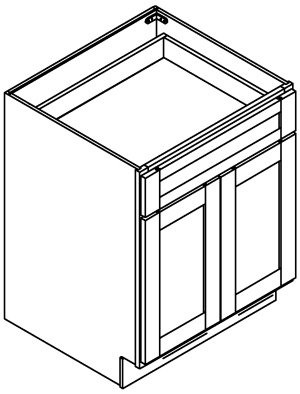

STEP 12

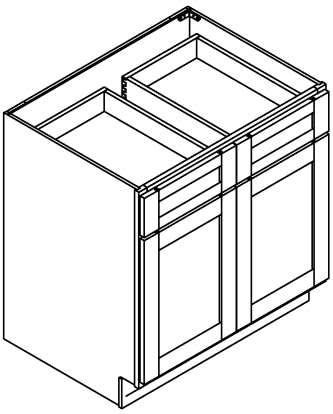

ASSEMBLY INSTRUCTIONS - DRAWER BASE CABINET (2 DRAWERS)

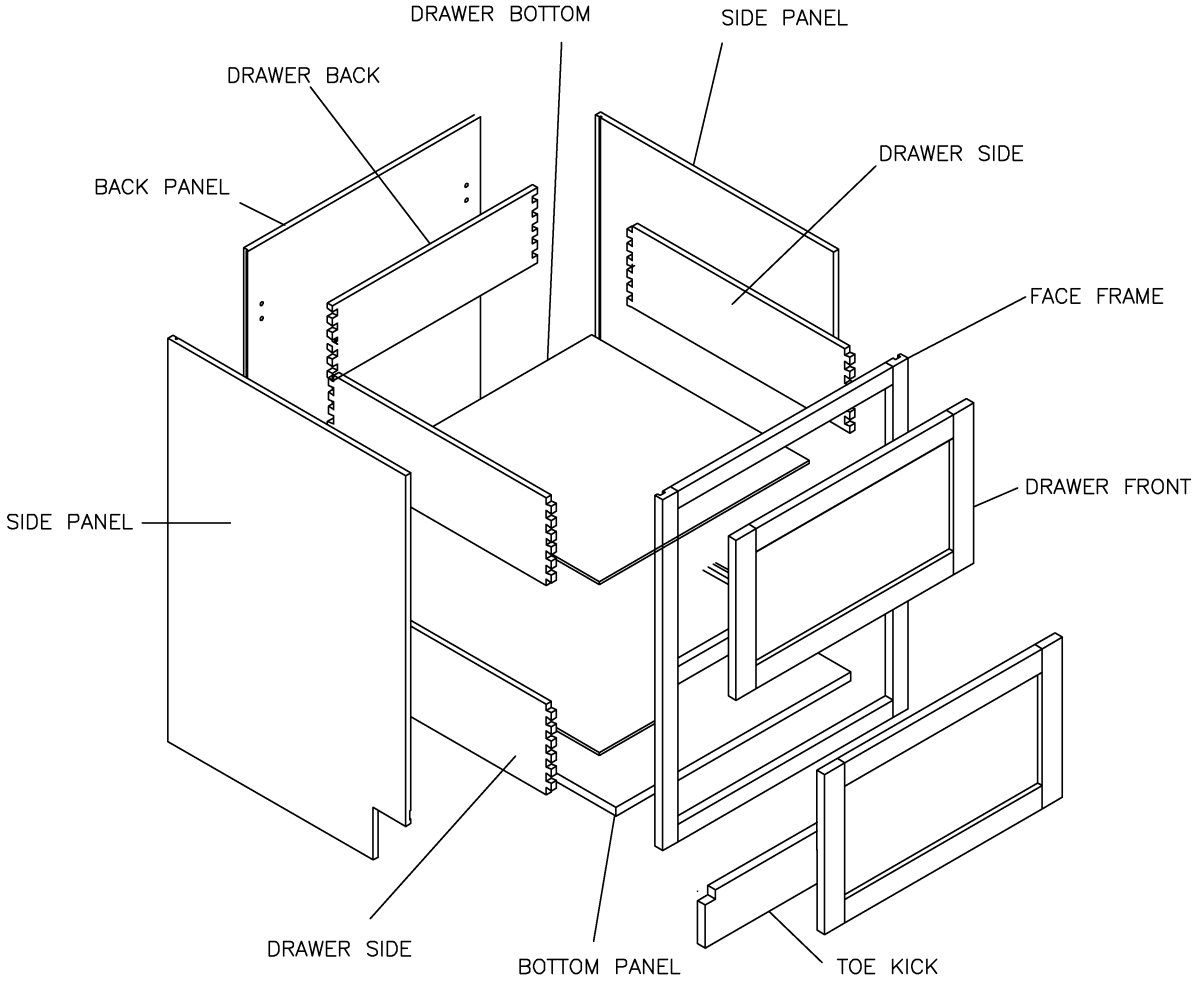

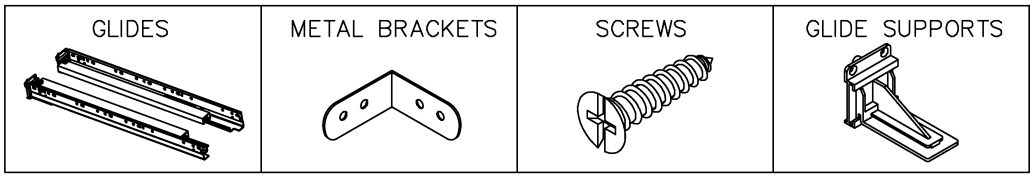

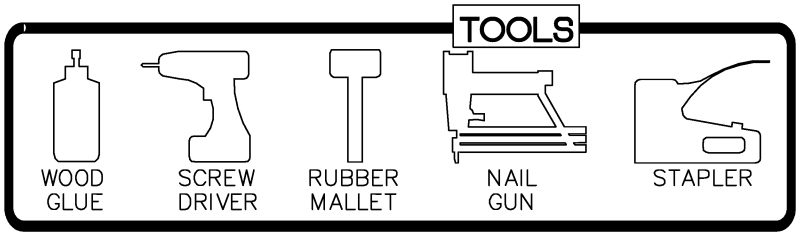

This instruction applies to the following items:
2DB30, 2DB33, 2DB36

STEP 1

Glue each assembly slot

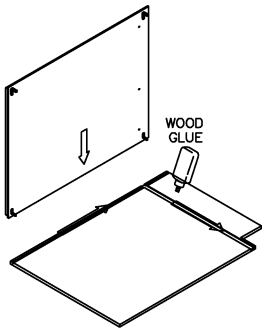

STEP 2

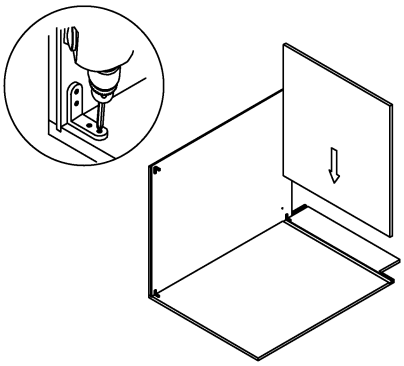

STEP 3

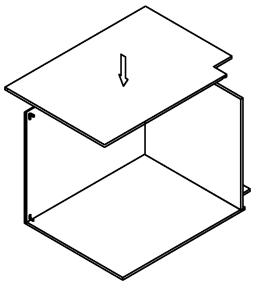

STEP 4

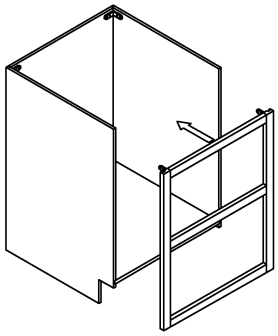

STEP 5

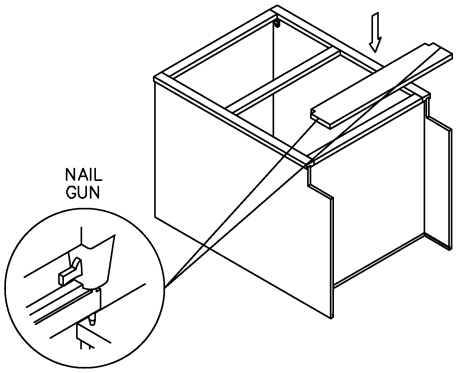

STEP 6

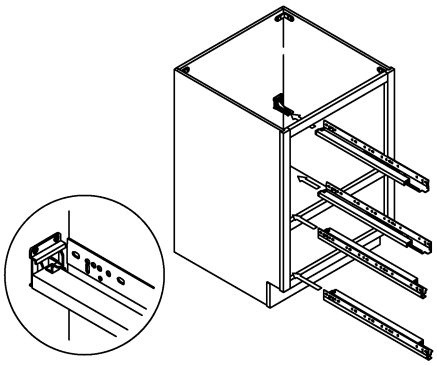

STEP 7

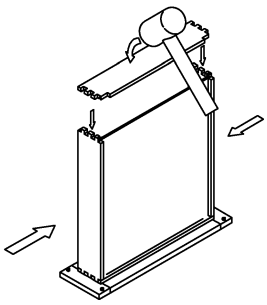

STEP 8

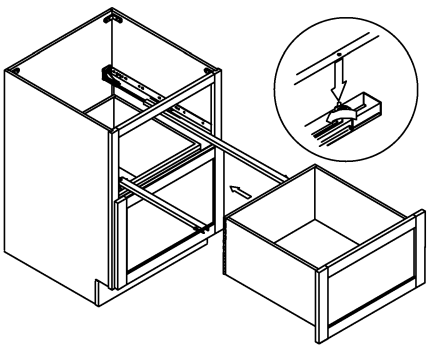

STEP 9

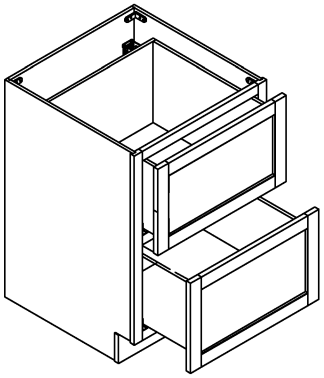

ASSEMBLY INSTRUCTIONS - DRAWER BASE CABINET (3 DRAWERS)

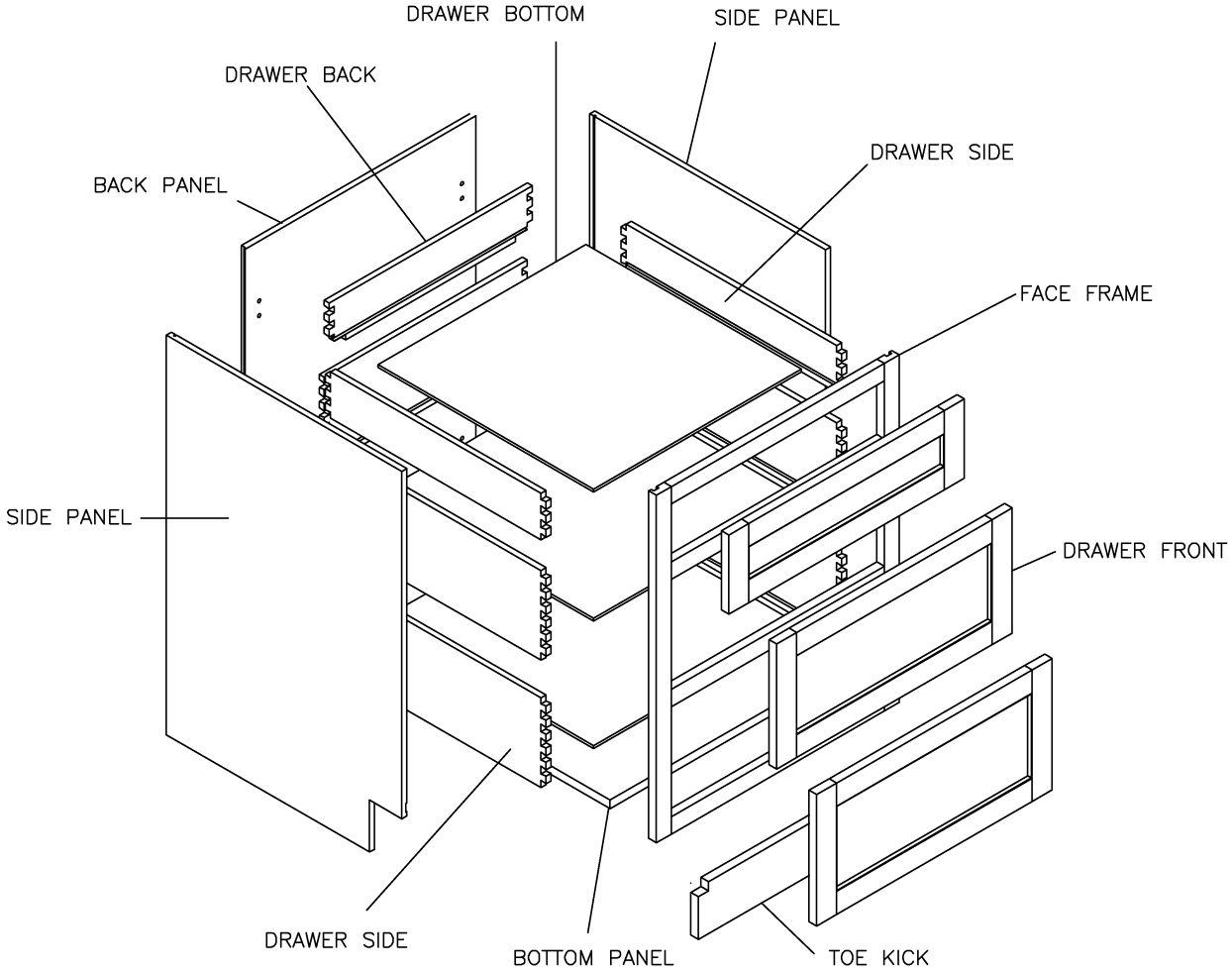

GLIDES	METAL BRACKETS	SCREWS	GLIDE SUPPORTS
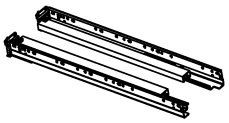	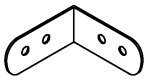	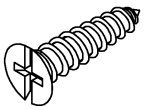	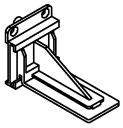

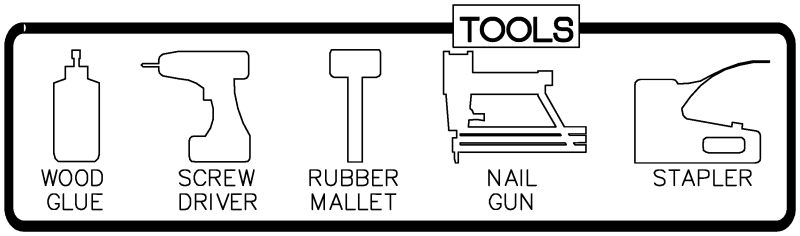

This instruction applies to the following items:
DB12、DB15、DB18、DB21
DB24、DB27、DB30、DB33、DB36

ASSEMBLY INSTRUCTIONS - BLIND BASE CORNER CABINET

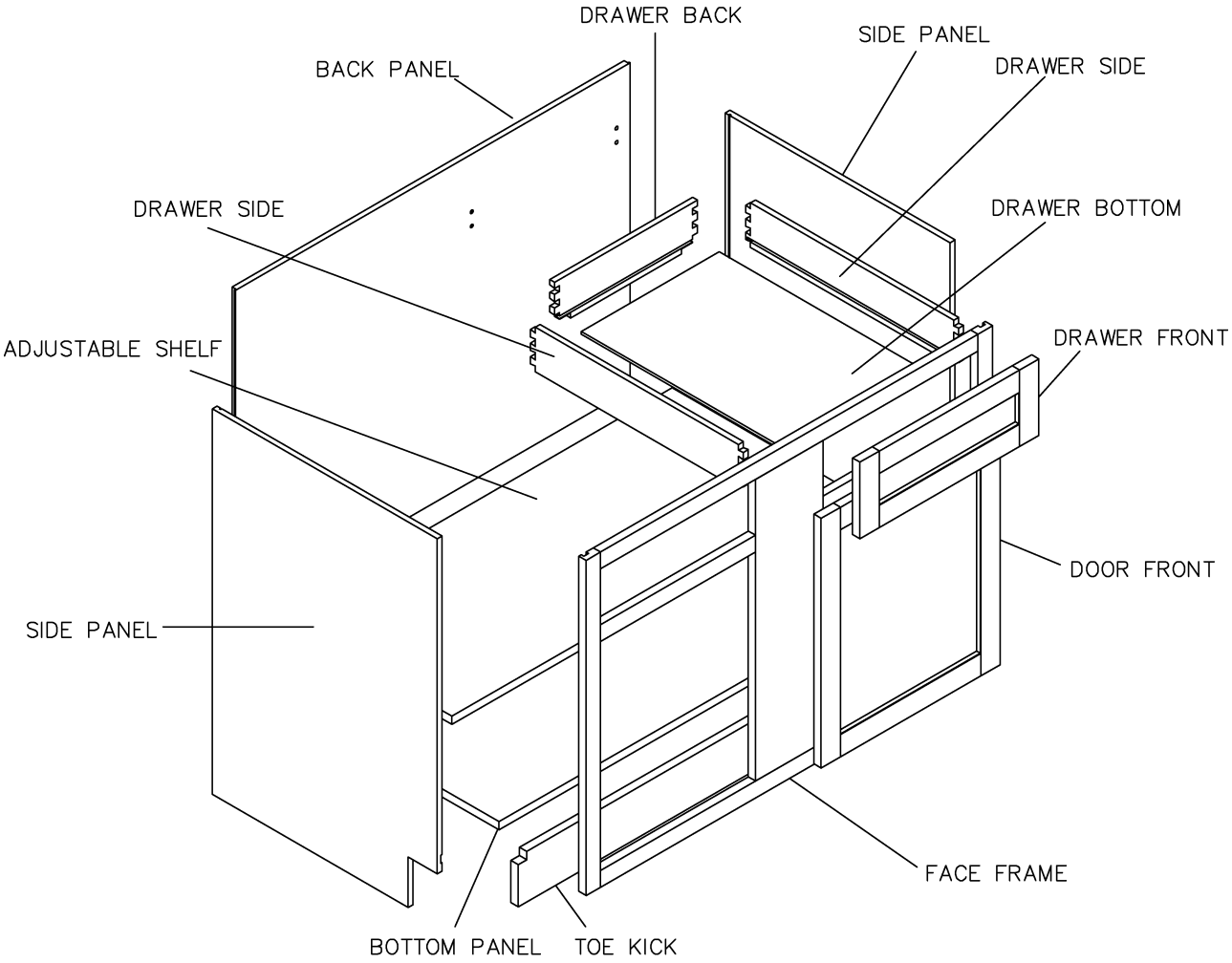

GLIDES	METAL BRACKETS	SCREWS	SHELF CLIPS	GLIDE SUPPORTS
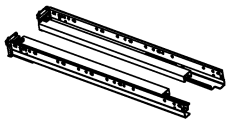	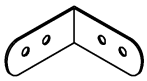	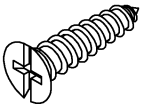		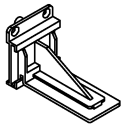

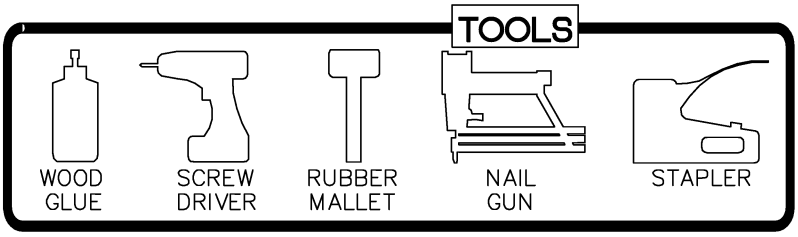

This instruction applies to the following items:
BBC33-9

STEP 1

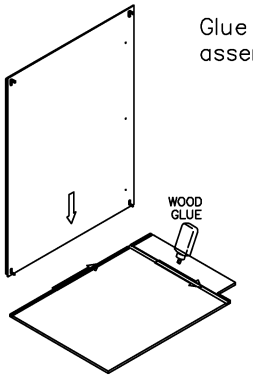

STEP 2

Glue each
assembly slot

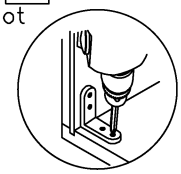

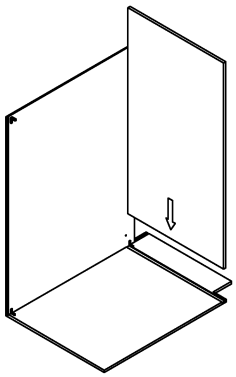

STEP 3

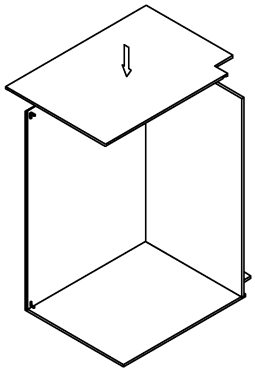

STEP 4

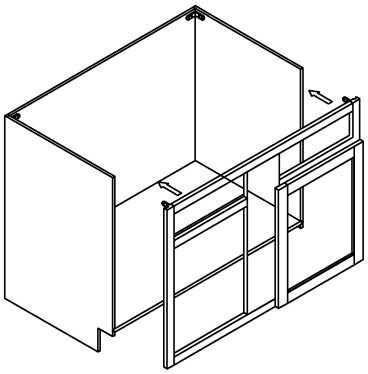

STEP 5

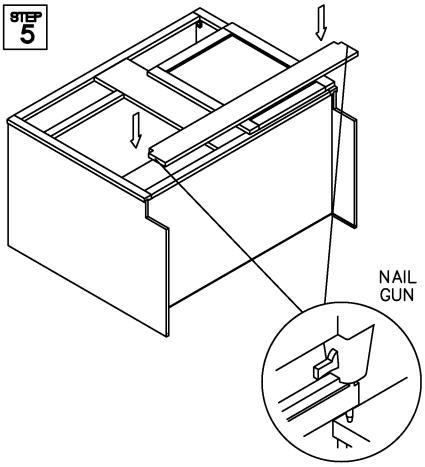

STEP 6

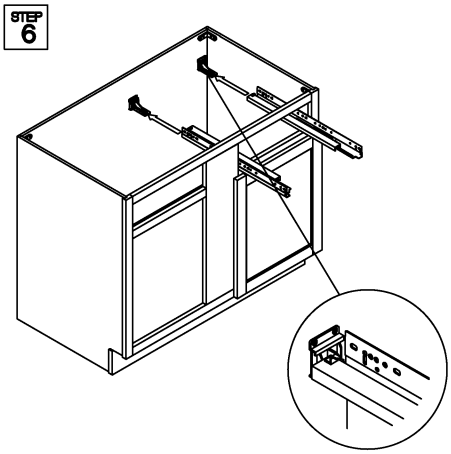

STEP 7

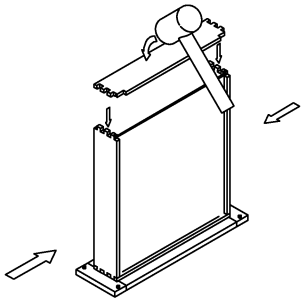

STEP 8

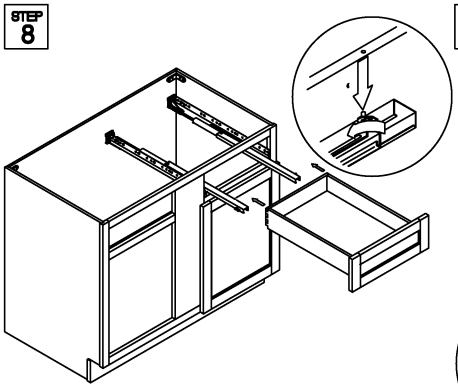

STEP 9

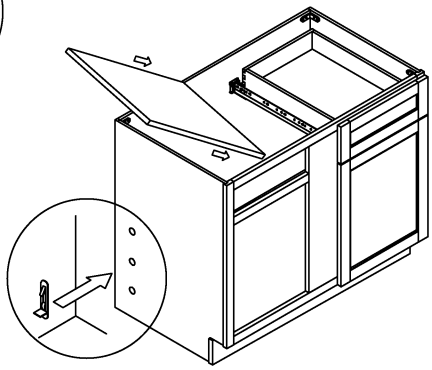

STEP 10

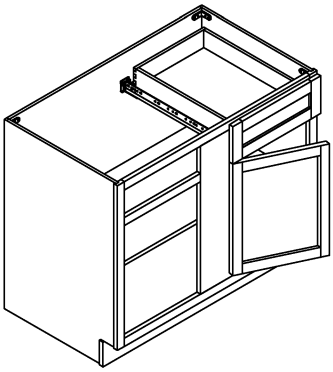

ASSEMBLY INSTRUCTIONS - LAZY SUSAN CORNER CABINET

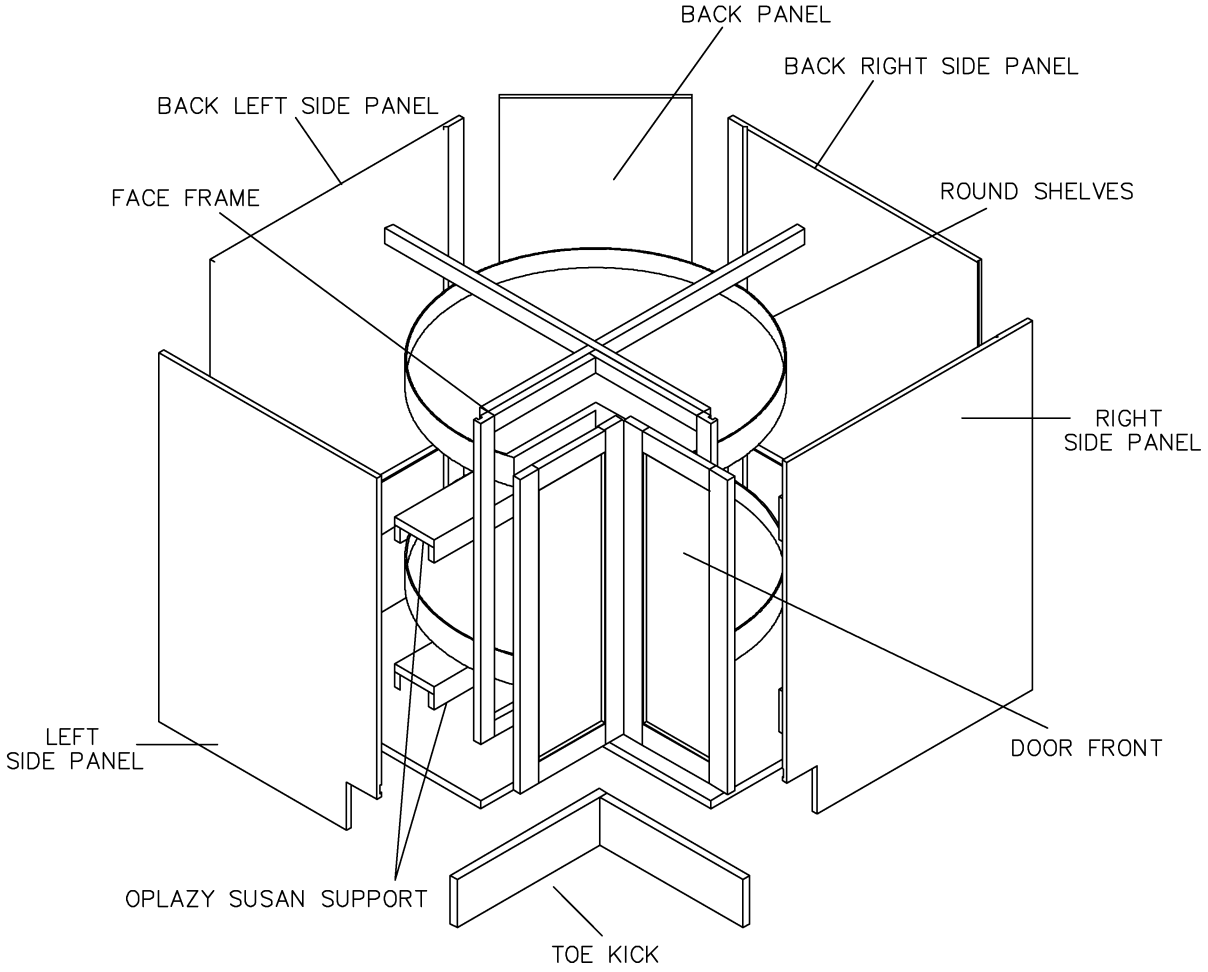

METAL BRACKETS	METAL BRACKETS	BIFOLD HINGE	170 HINGE	SCREWS
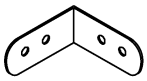	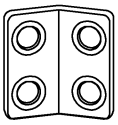	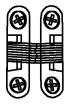 ES/DS/SG	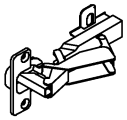	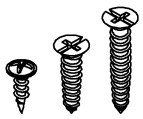

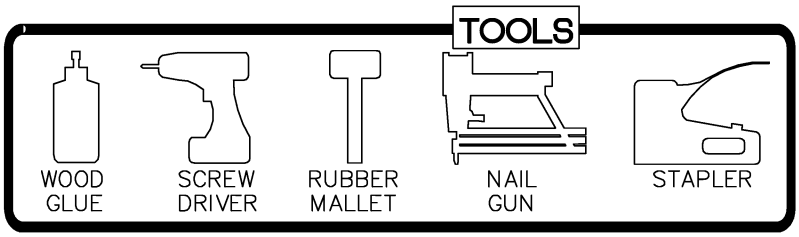

This instruction applies to the following items:
LZS33、LZS3612

STEP 1

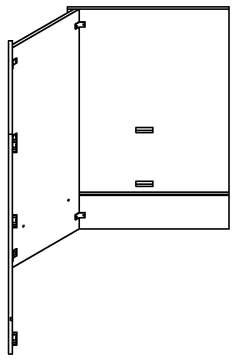

STEP 2

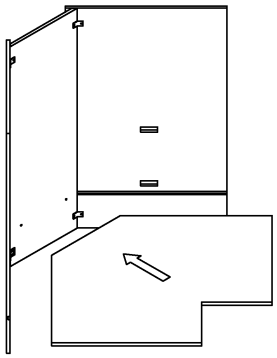

STEP 3

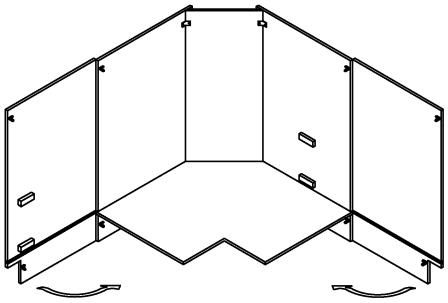

STEP 4

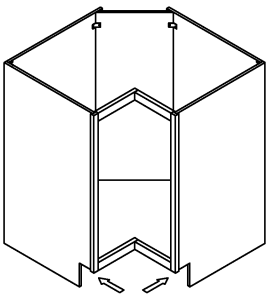

STEP 5

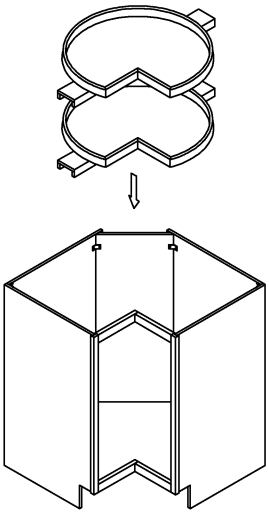

STEP 6

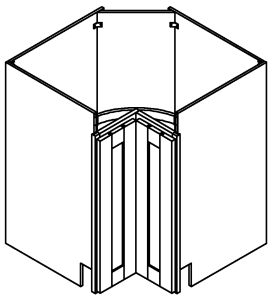

STEP 7

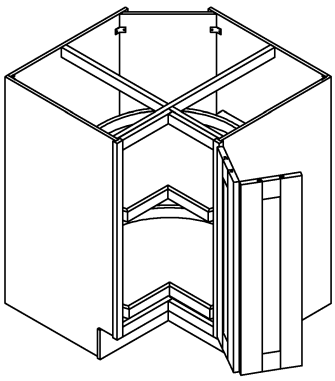

STEP 8

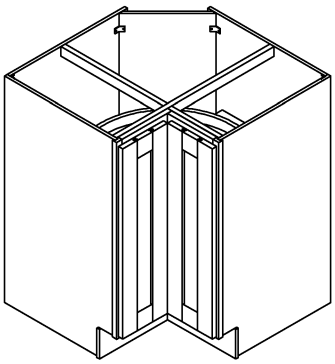

ASSEMBLY INSTRUCTIONS - BASE MICROWAVE CABINET

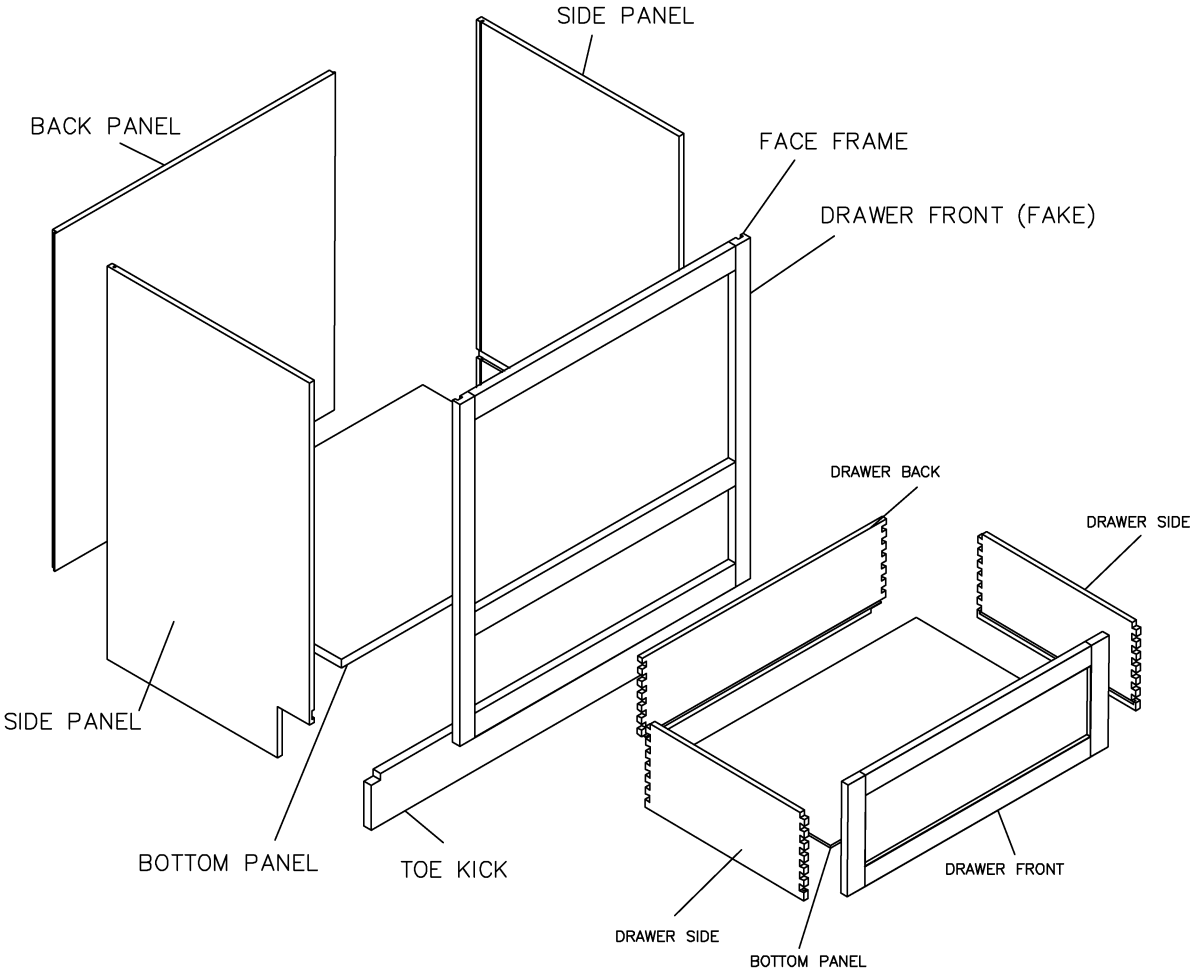

GLIDES	METAL BRACKETS	SCREWS	GLIDE SUPPORTS
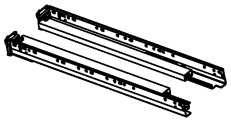	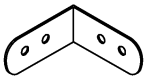	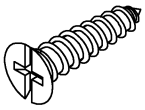	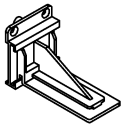

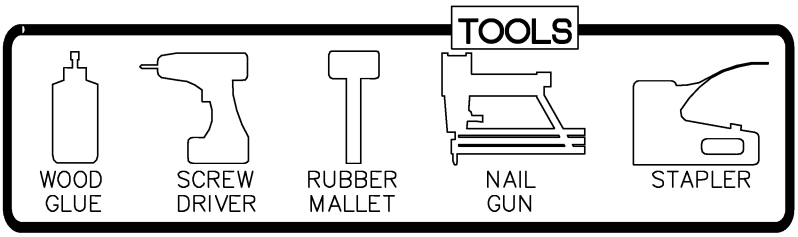

This instruction applies to the following items:
BMC30

STEP 1

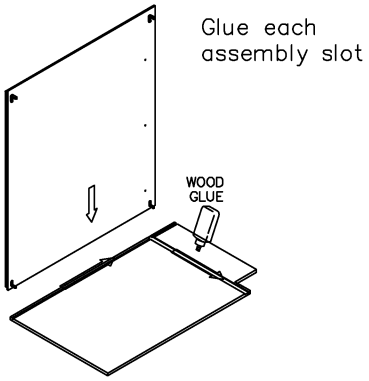

STEP 2

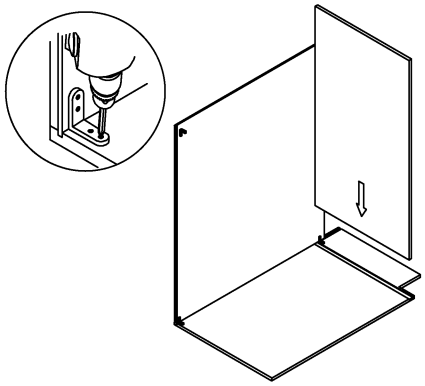

STEP 3

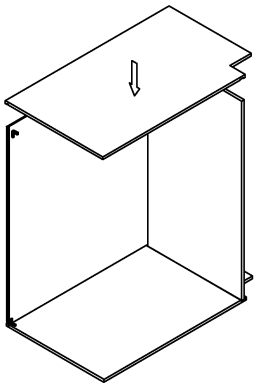

STEP 4

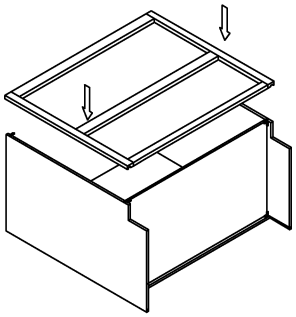

STEP 5

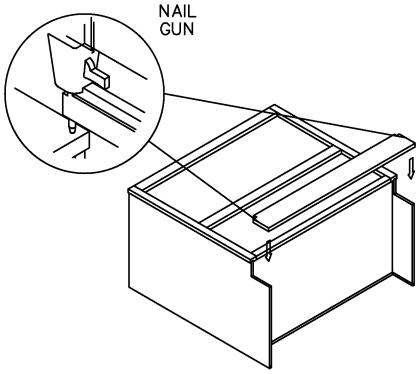

STEP 6

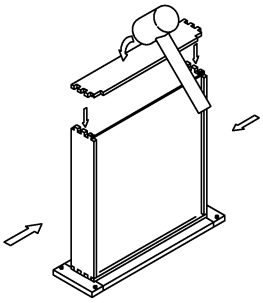

STEP 7

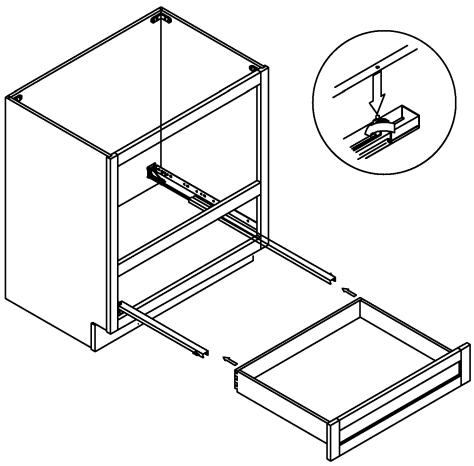

STEP 8

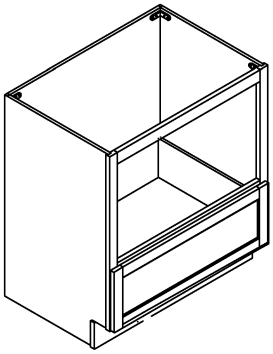

ASSEMBLY INSTRUCTIONS - BASE WASTE BASKET CABINET

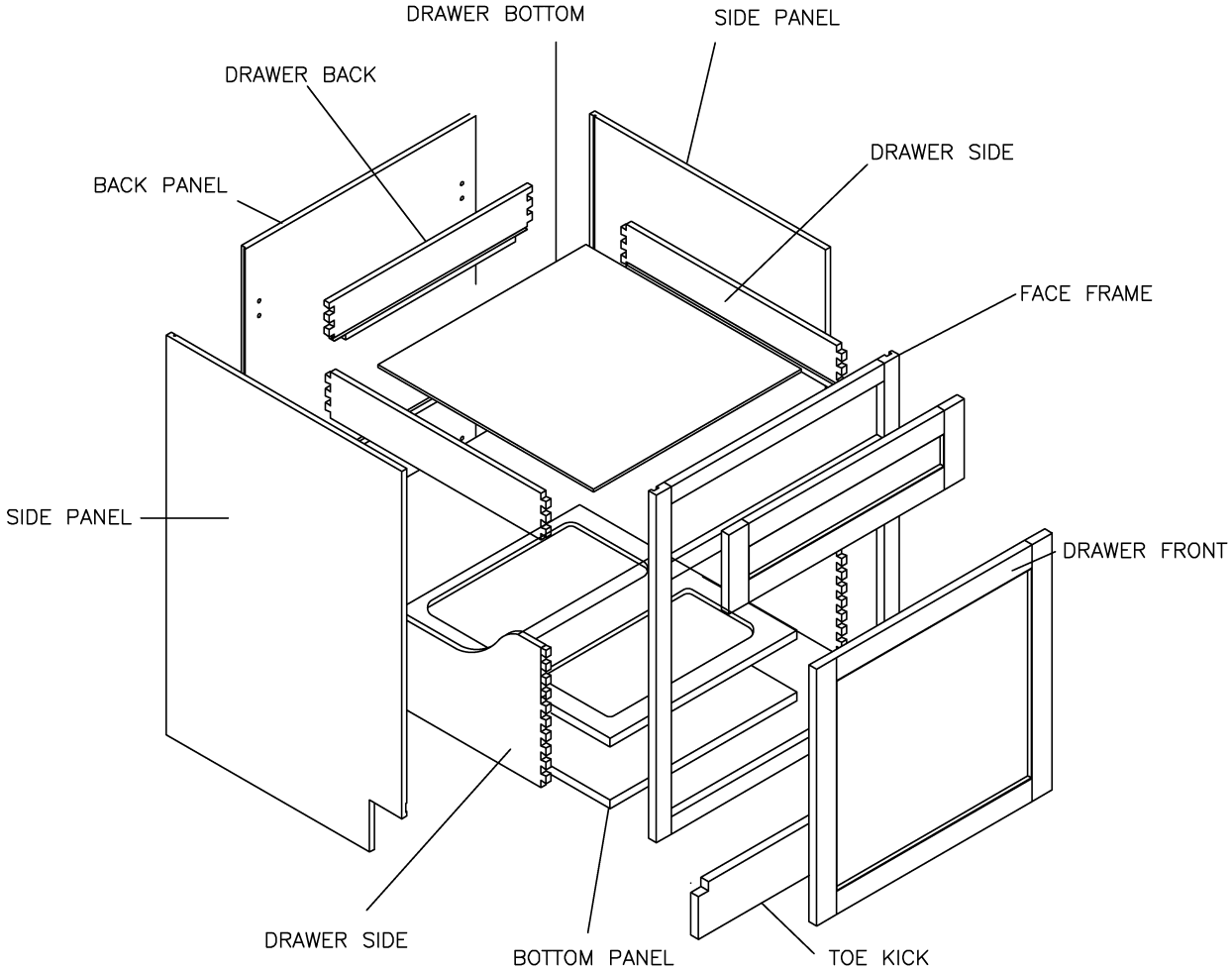

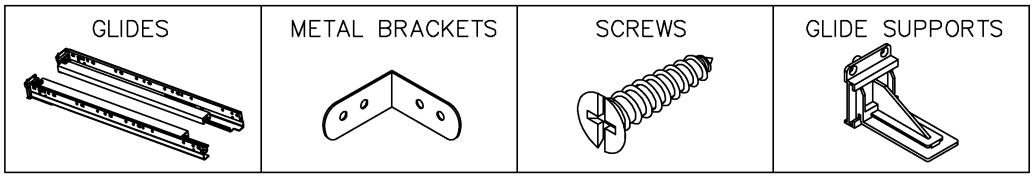

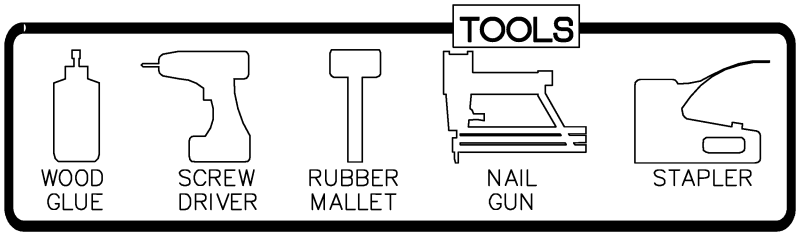

This instruction applies to the following items:
BWBKT18

STEP 1

Glue each assembly slot

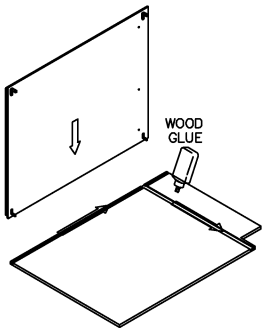

STEP 2

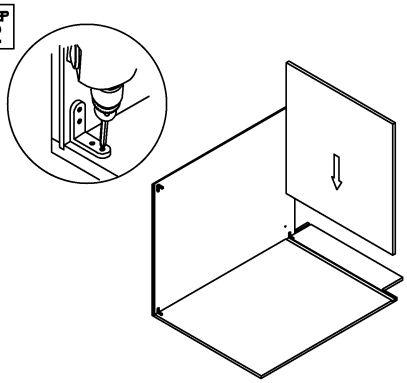

STEP 3

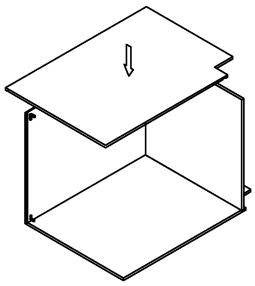

STEP 4

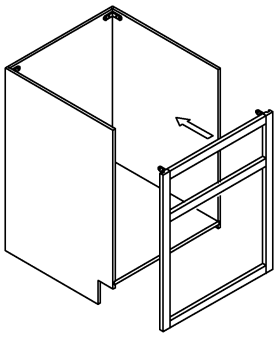

STEP 5

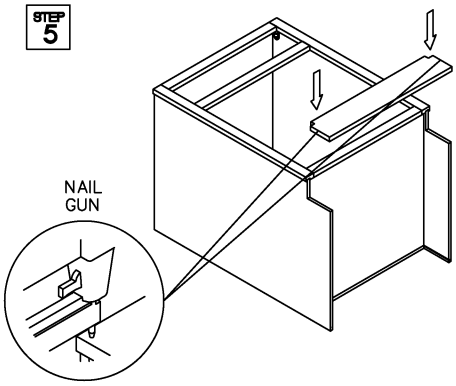

STEP 6

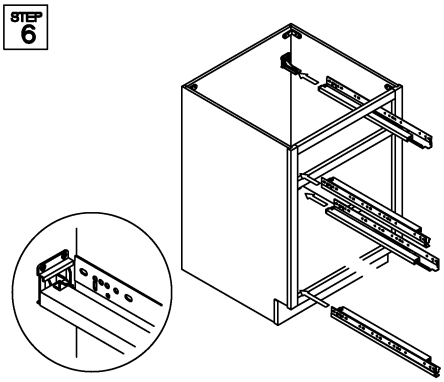

STEP 7

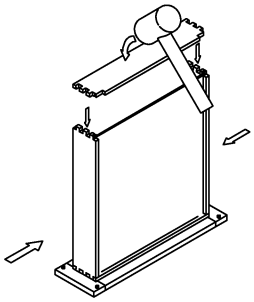

STEP 8

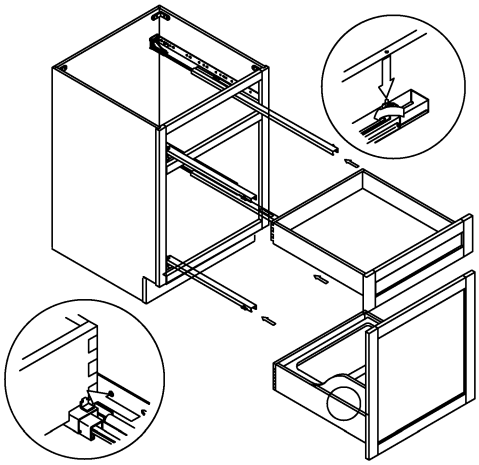

STEP 9

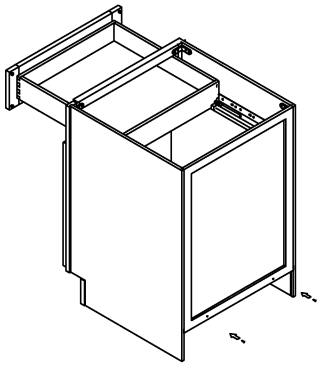

STEP 10

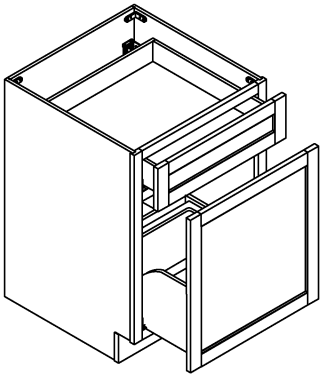

ASSEMBLY INSTRUCTIONS - WALL CAB

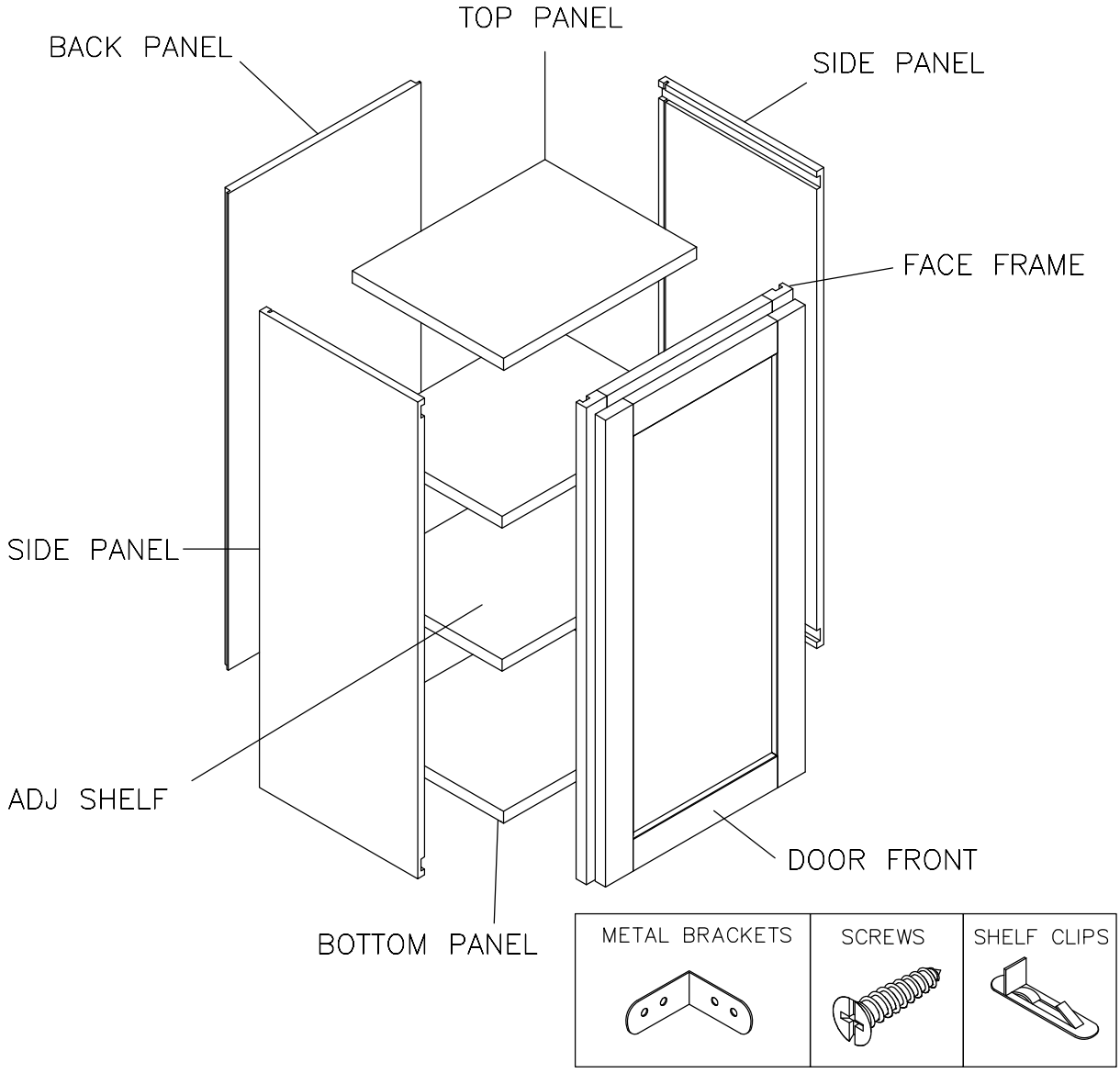

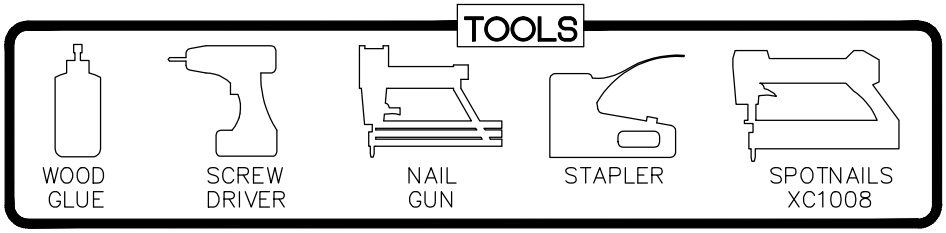

This instruction applies to the following items:

W1224-W2724	W0930-W2130	W2430-W3630
W3024-W3624	W0936-W2136	W2436-W3636
W302427-W362427	W0942-W2142	W2442-W3642

STEP 1

Glue each assembly slot

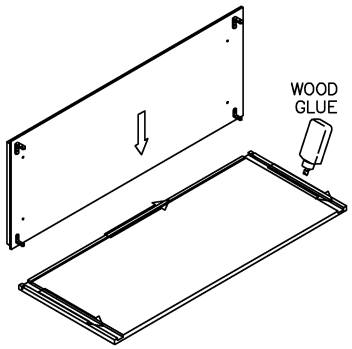

STEP 2

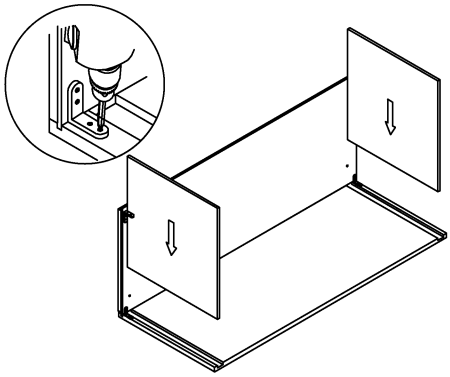

STEP 3

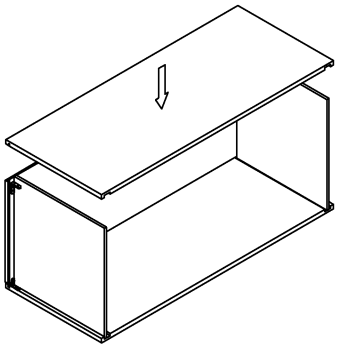

STEP 4

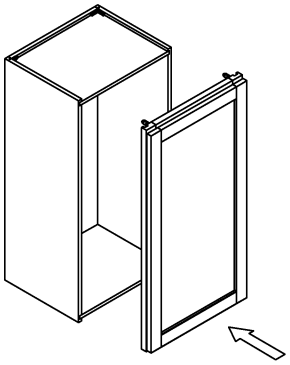

STEP 5

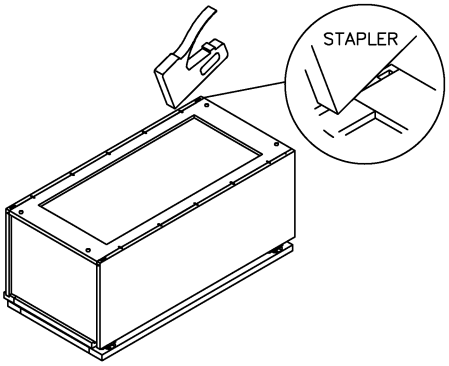

STEP 6

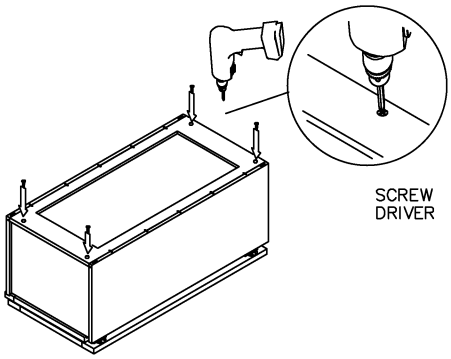

STEP 7

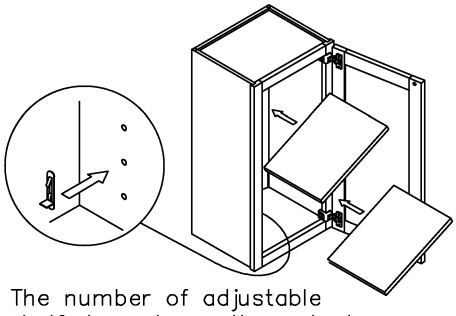

The number of adjustable shelf depends on the actual cabinet type

STEP 8

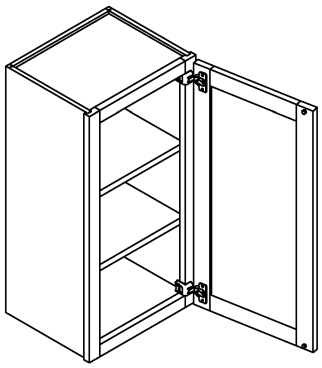

STEP 9

Double door installation method is the same as above

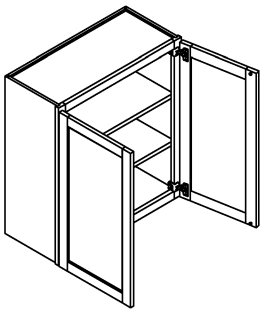

ASSEMBLY INSTRUCTIONS - WALL CABIN

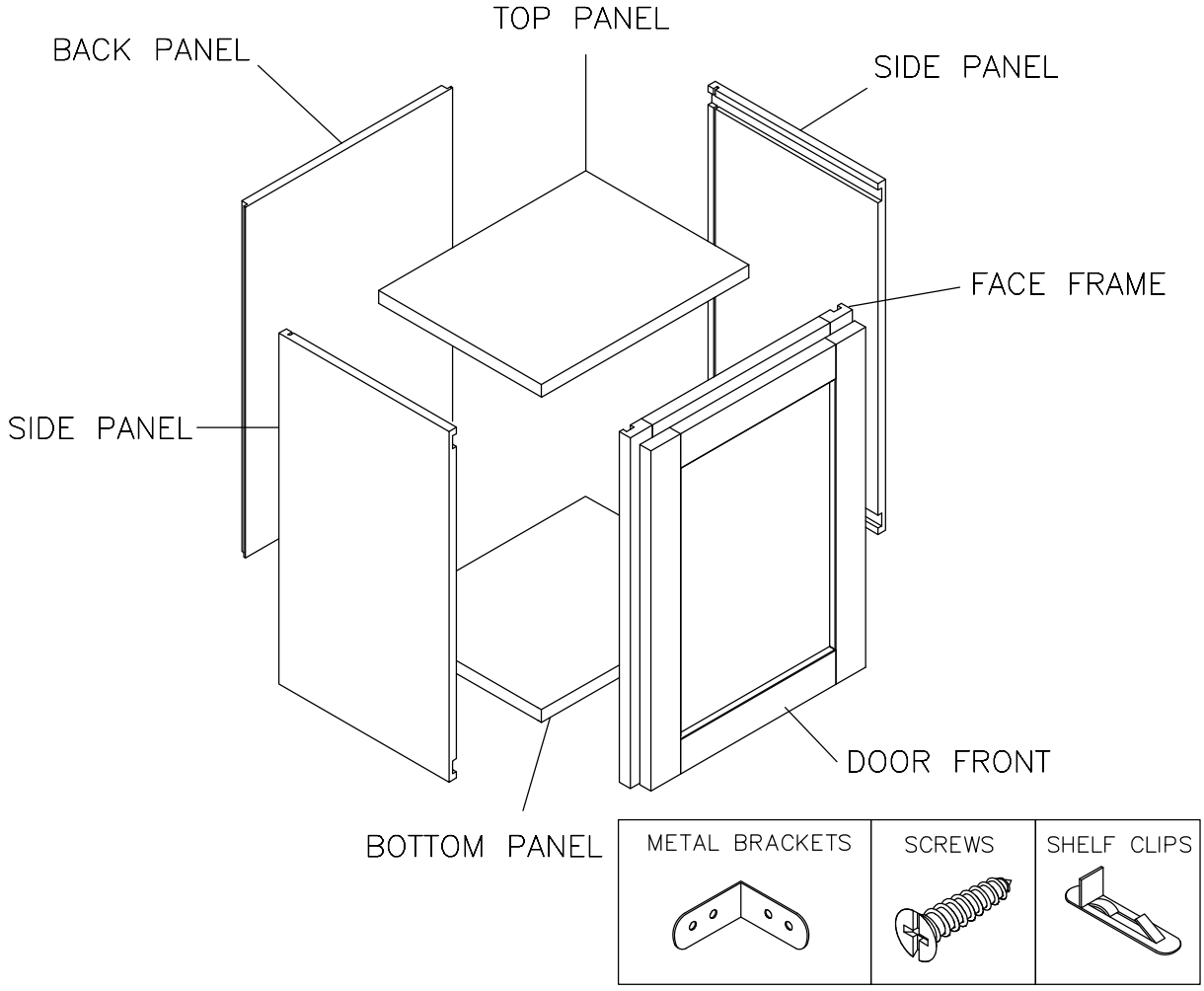

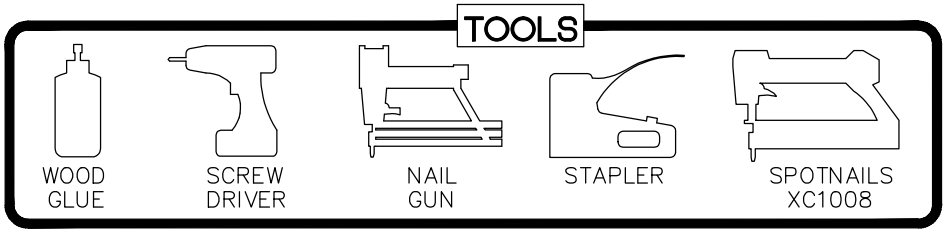

This instruction applies to the following items:

W2412-W2418	W3012-W3612	W3015-W3615	W3018-W3618
	W301227-W361227	W301527-W361527	W301827-W361827

STEP 1

Glue each assembly slot

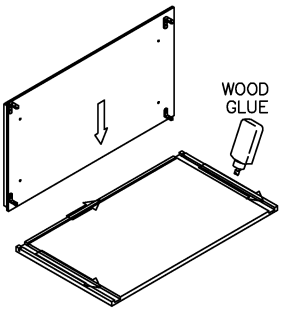

STEP 2

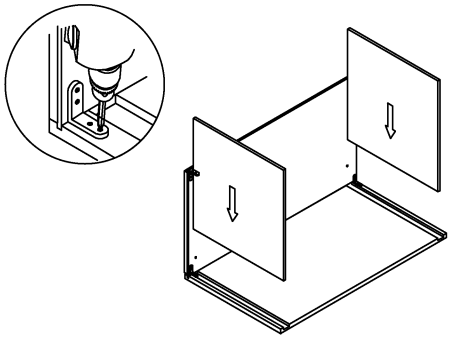

STEP 3

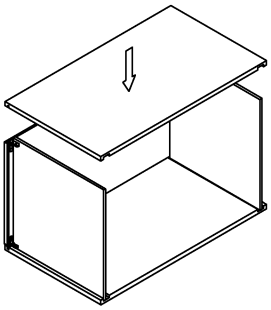

STEP 4

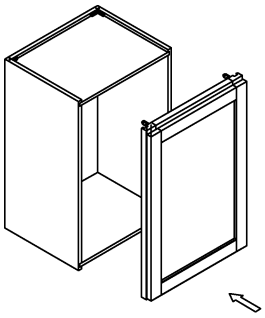

STEP 5

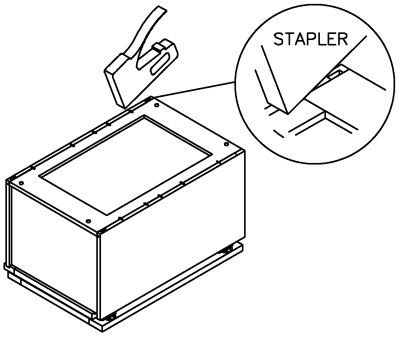

STEP 6

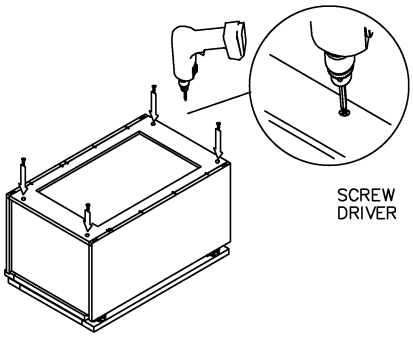

STEP 7

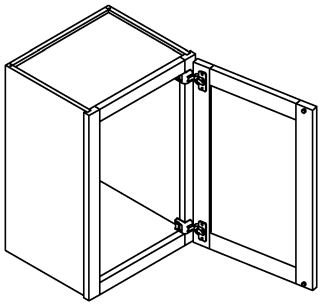

STEP 8

Double door installation
method is the same as above

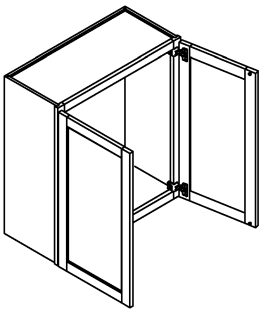

ASSEMBLY INSTRUCTIONS - WALL DIAGONAL CORNER CABINET

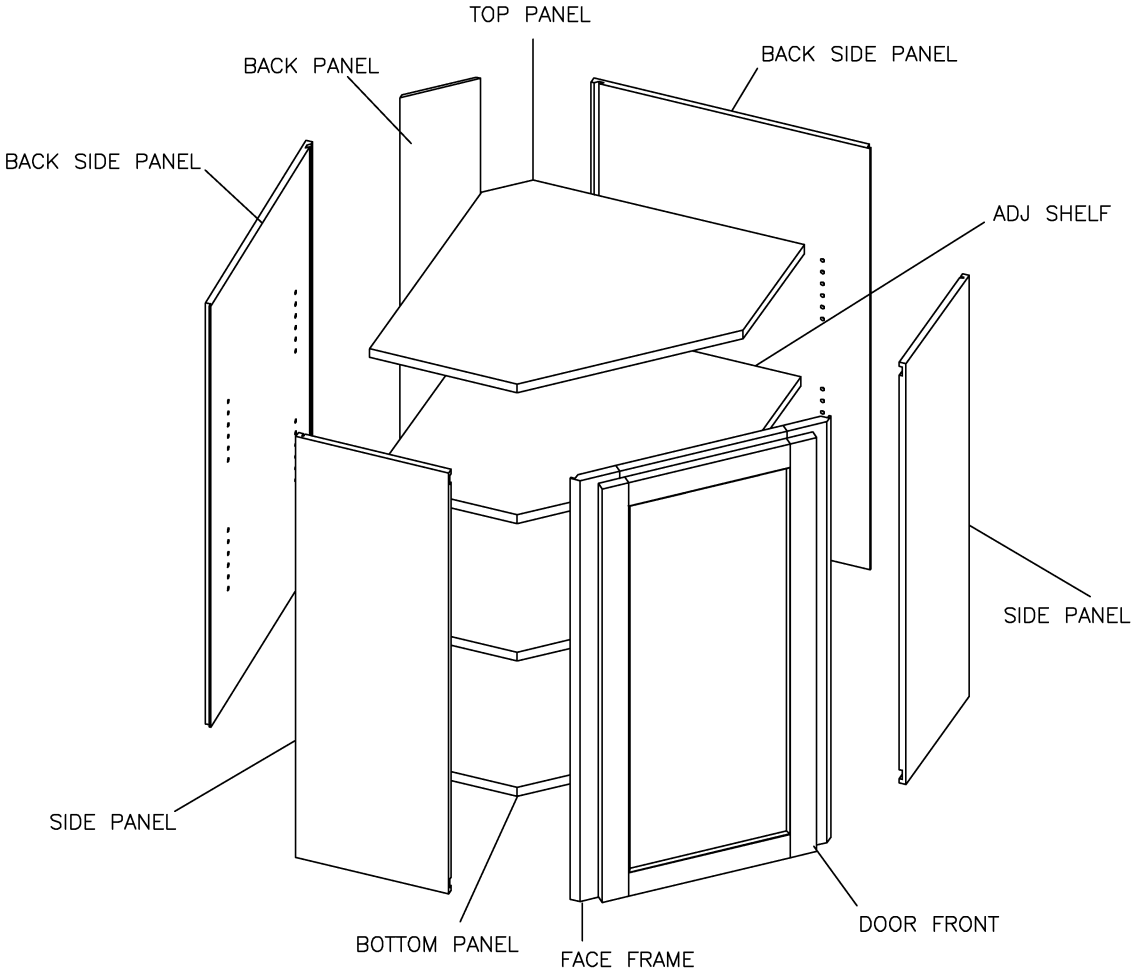

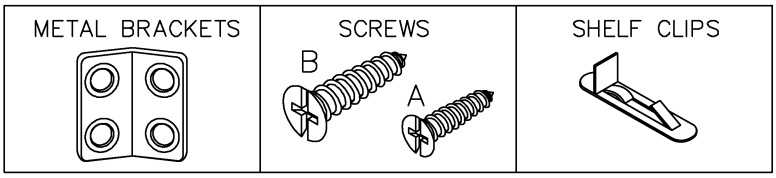

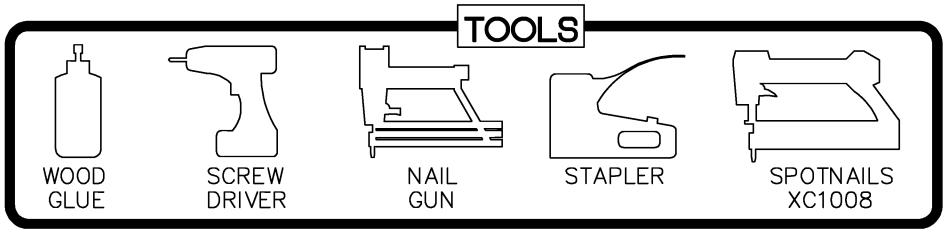

This instruction applies to the following items:

WDC243012,WDC243612,WDC244212

STEP 1

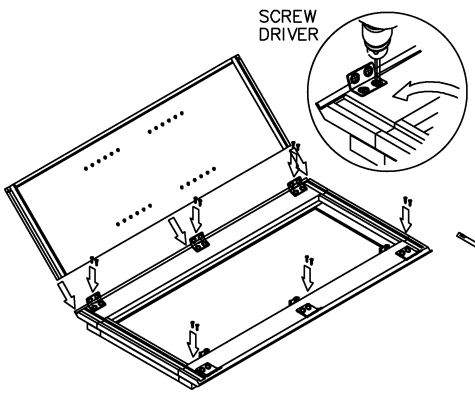

STEP 2

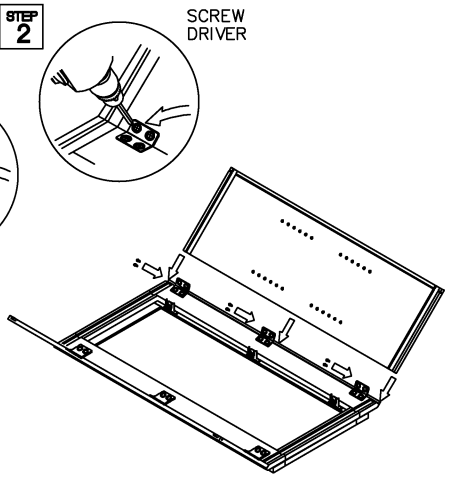

STEP 3

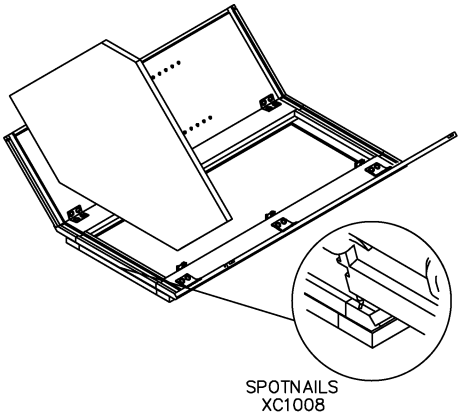

STEP 4

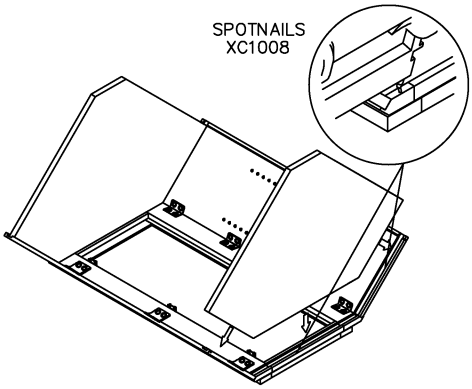

STEP 5

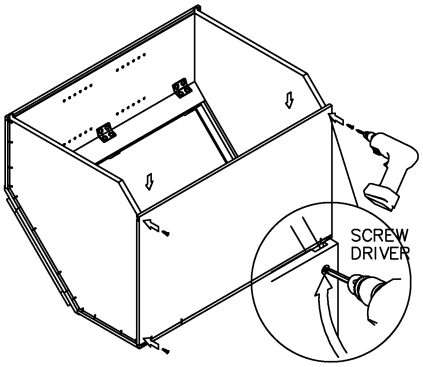

STEP 6

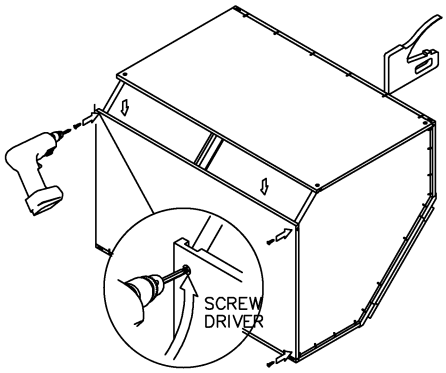

STEP 7

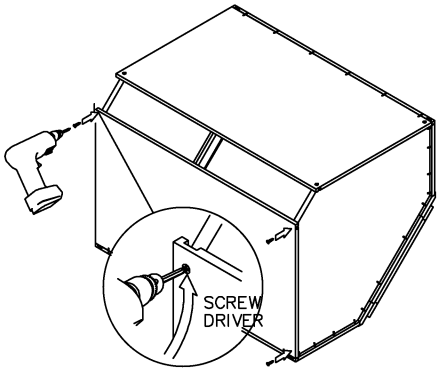

STEP 8

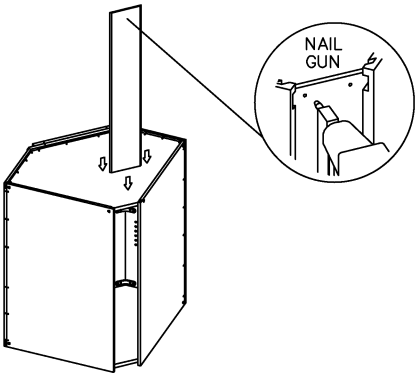

STEP 9

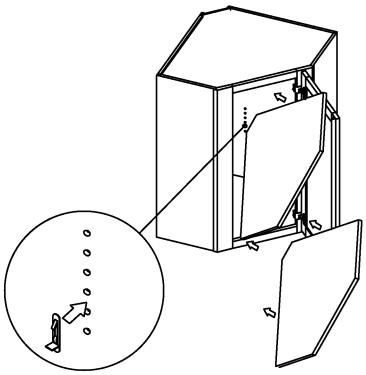

STEP 10

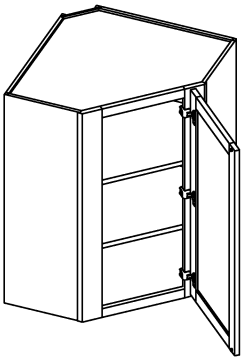

ASSEMBLY INSTRUCTIONS - WALL BLIND CORNER CABINET

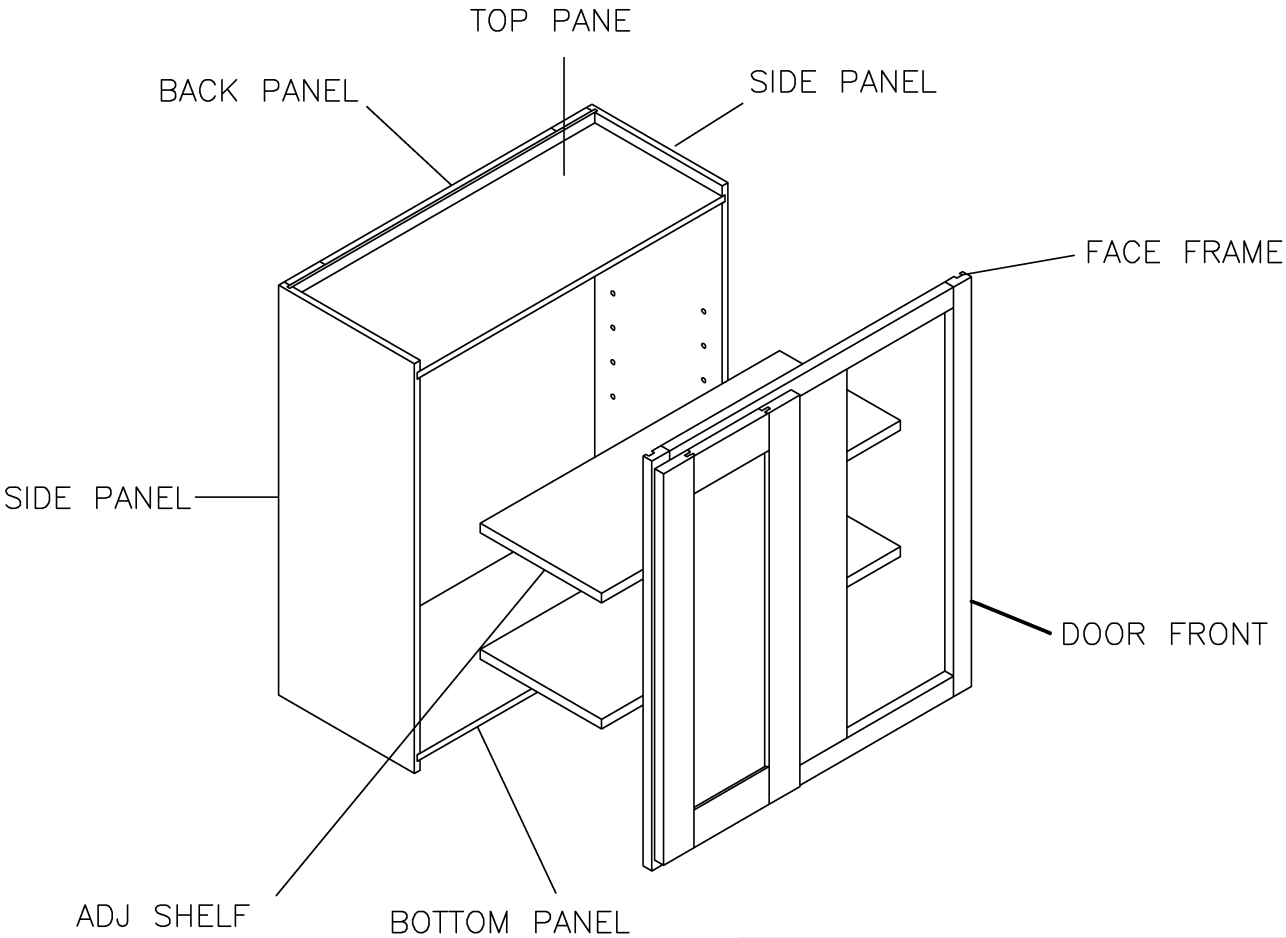

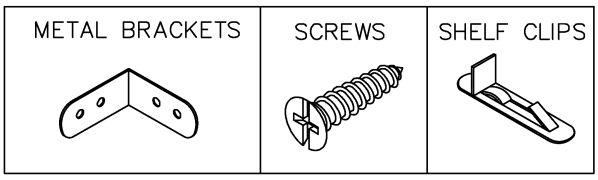

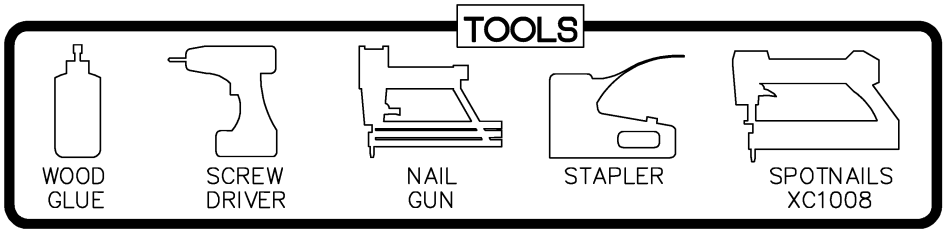

This instruction applies to the following items:
WBC2730-WBC2742

STEP 1

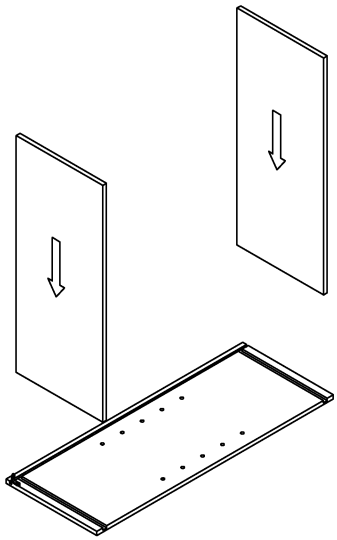

STEP 2

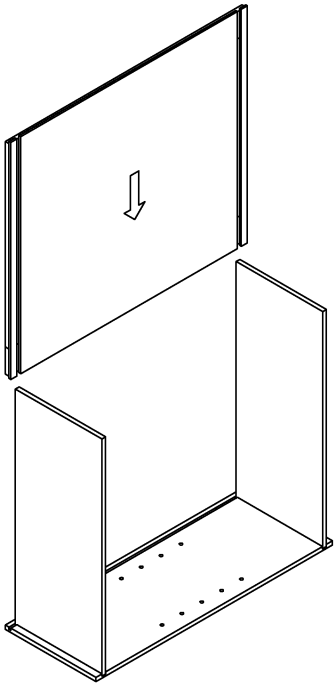

STEP 3

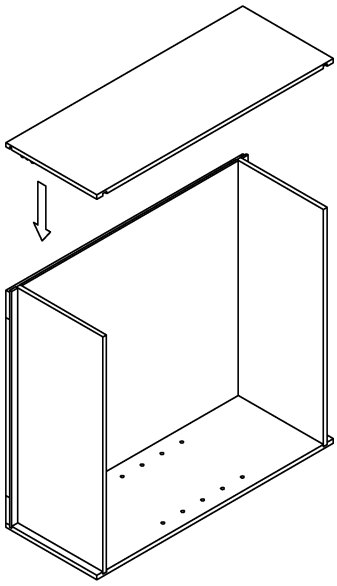

STEP 4

The number of adjustable shelf depends on the actual cabinet type

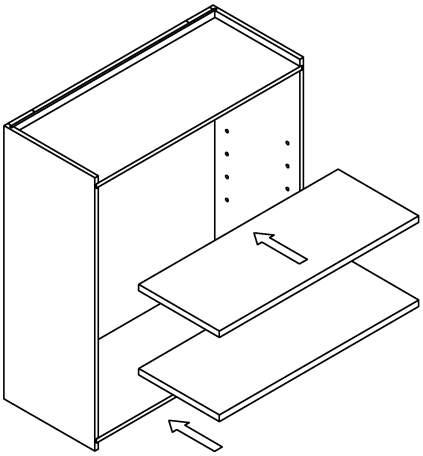

STEP 5

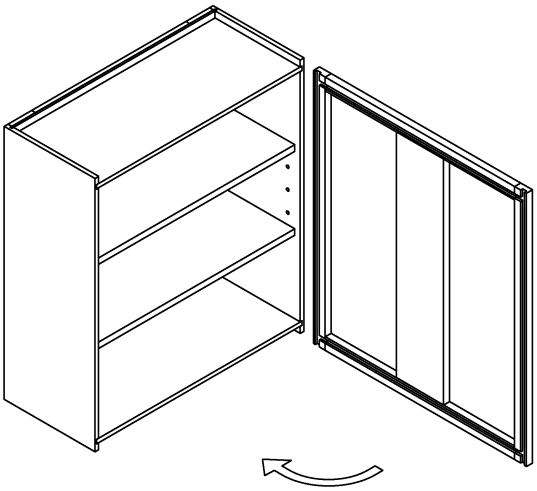

STEP 6

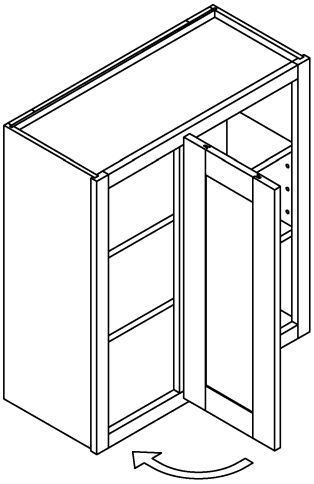

STEP 7

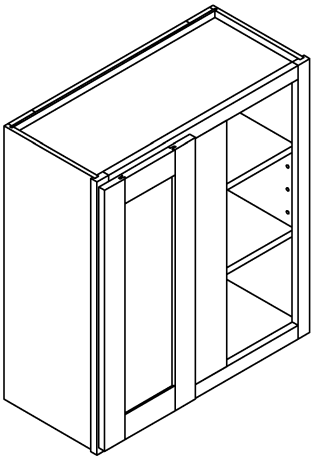

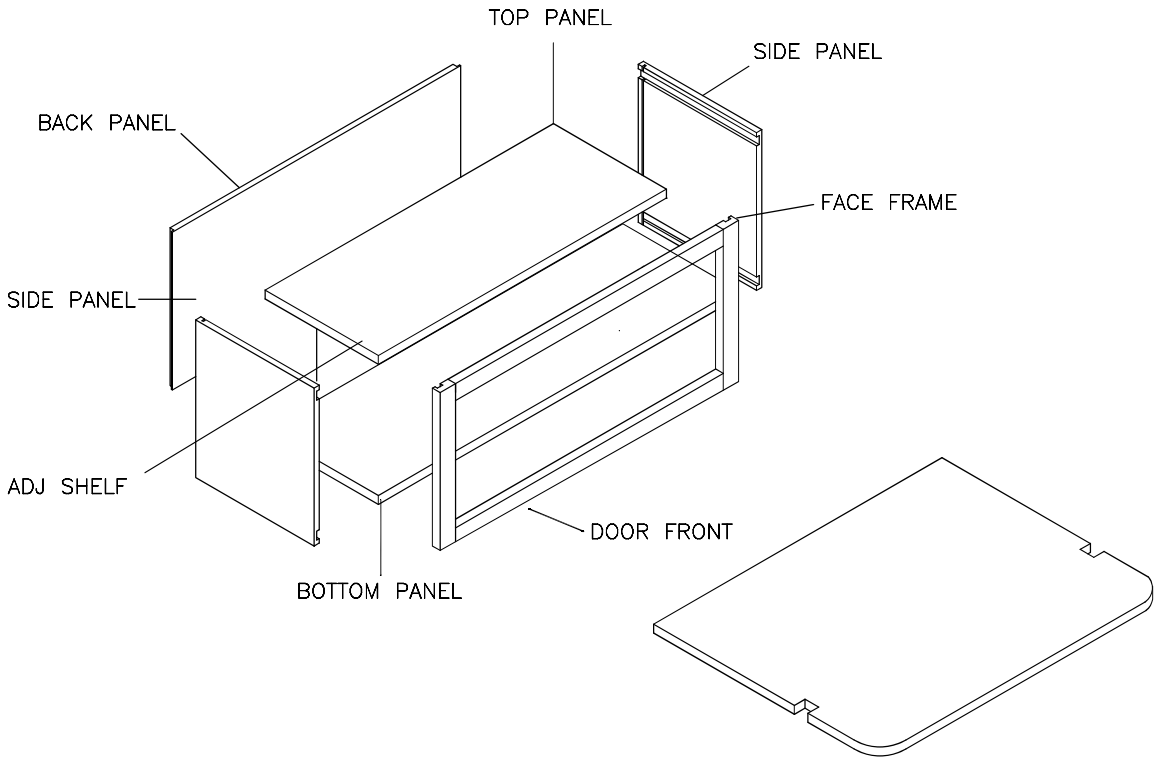

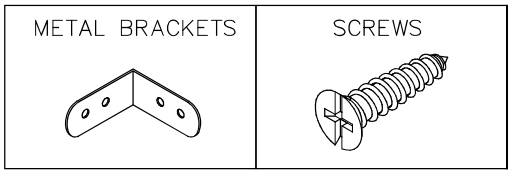

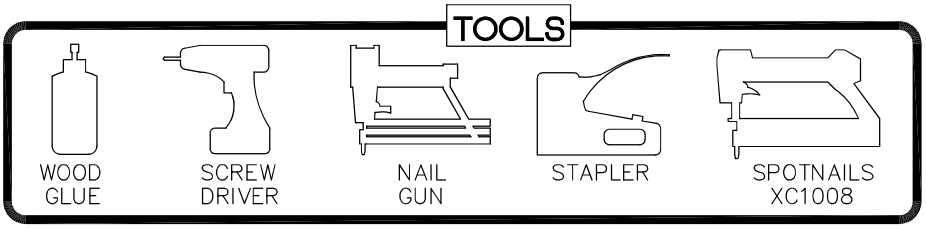

This instruction applies to the following items:

WMC3018

STEP 1

Glue each assembly slot

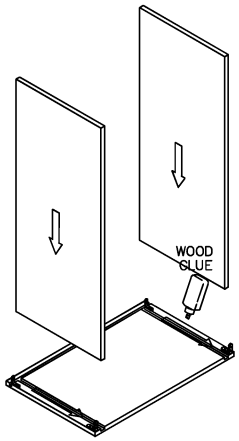

STEP 2

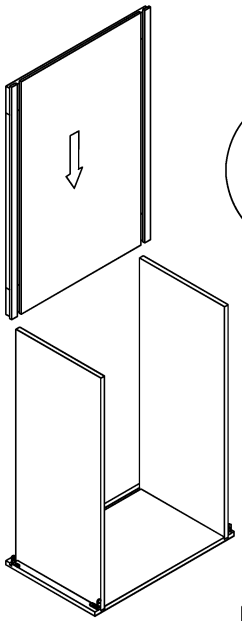

STEP 3

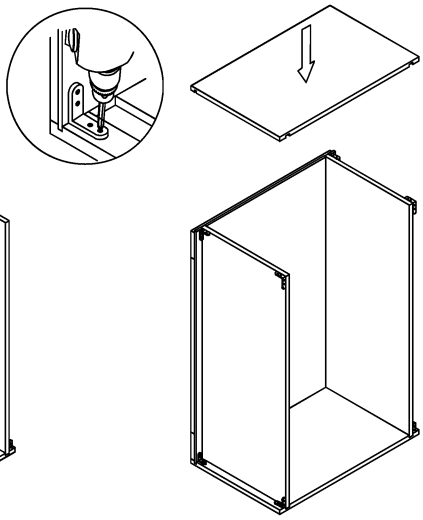

STEP 4

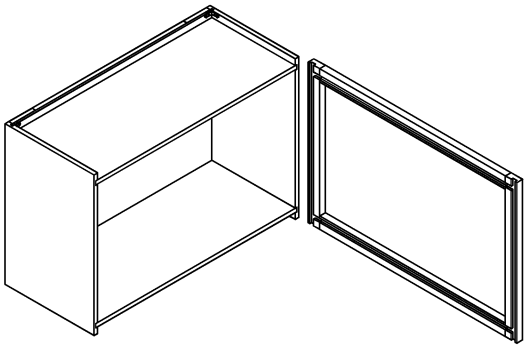

STEP 5

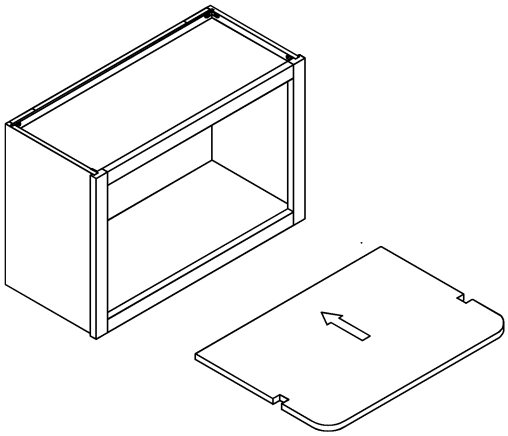

STEP 6

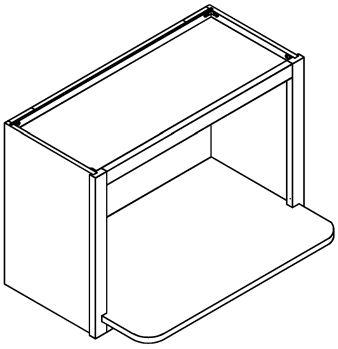

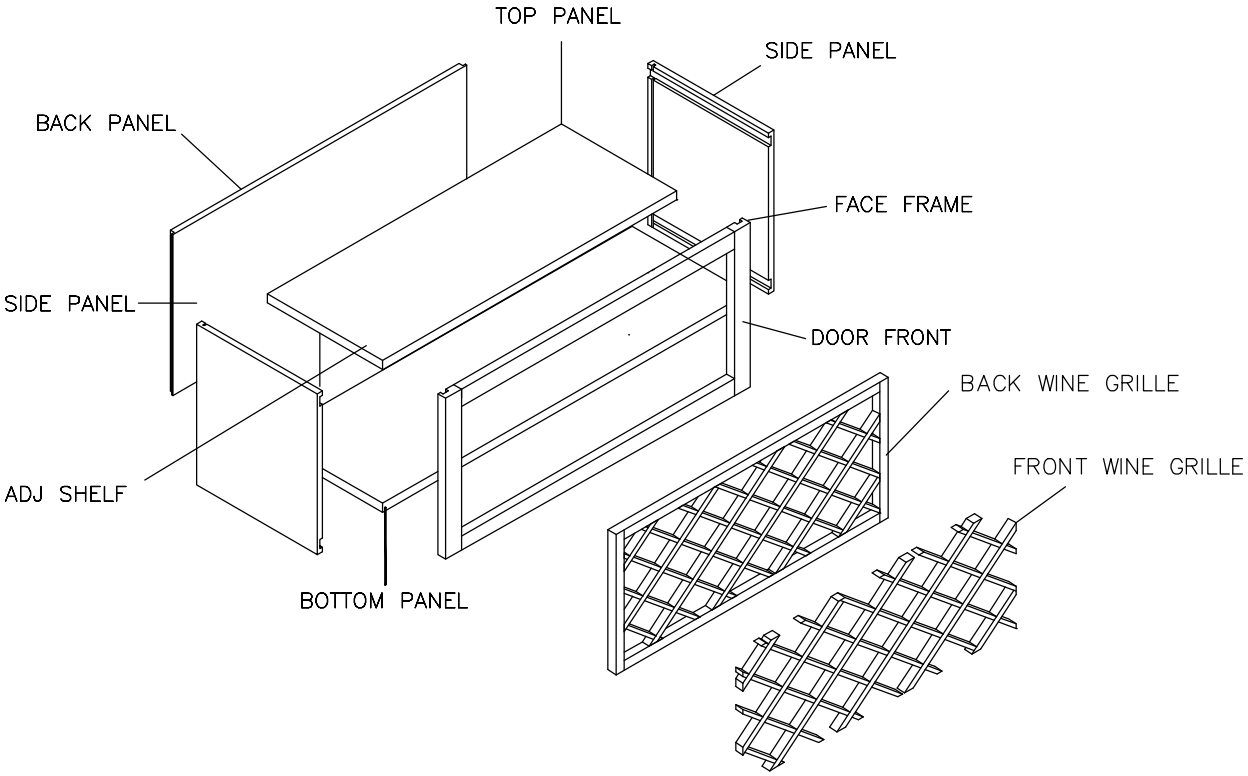

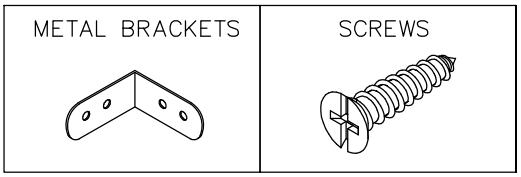

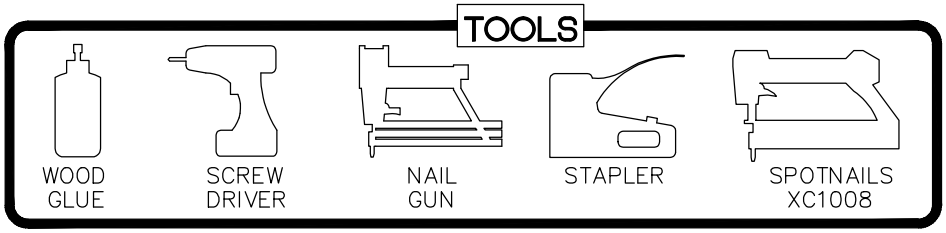

This instruction applies to the following items:
WRC3018

STEP 1

Glue each assembly slot

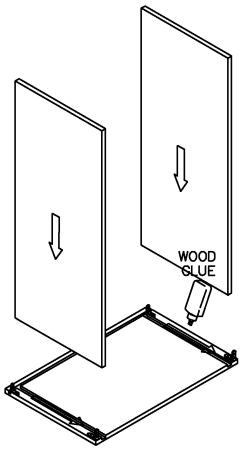

STEP 2

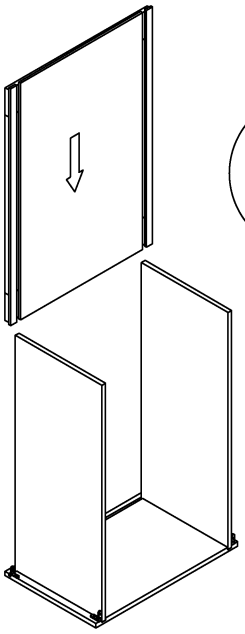

STEP 3

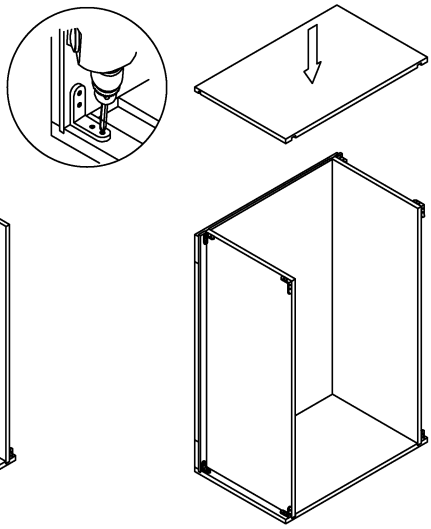

STEP 4

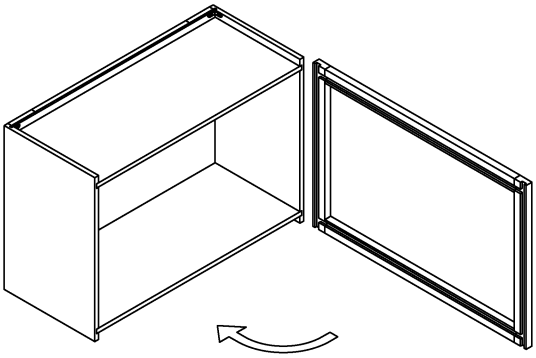

STEP 5

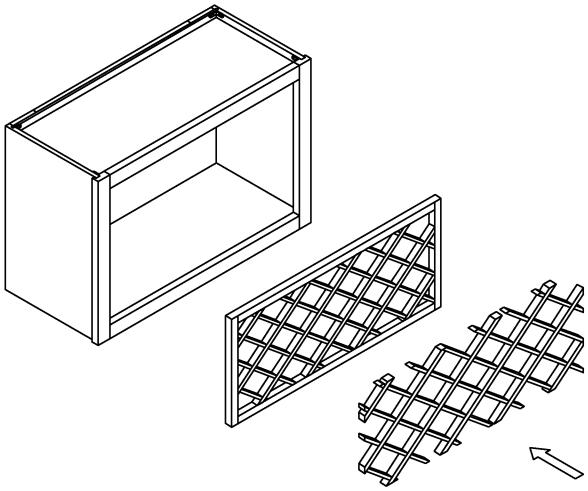

STEP 6

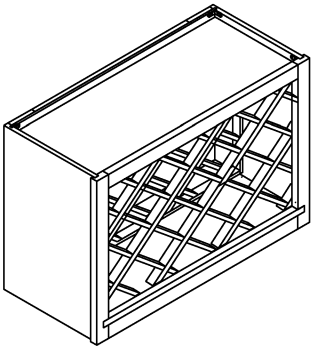

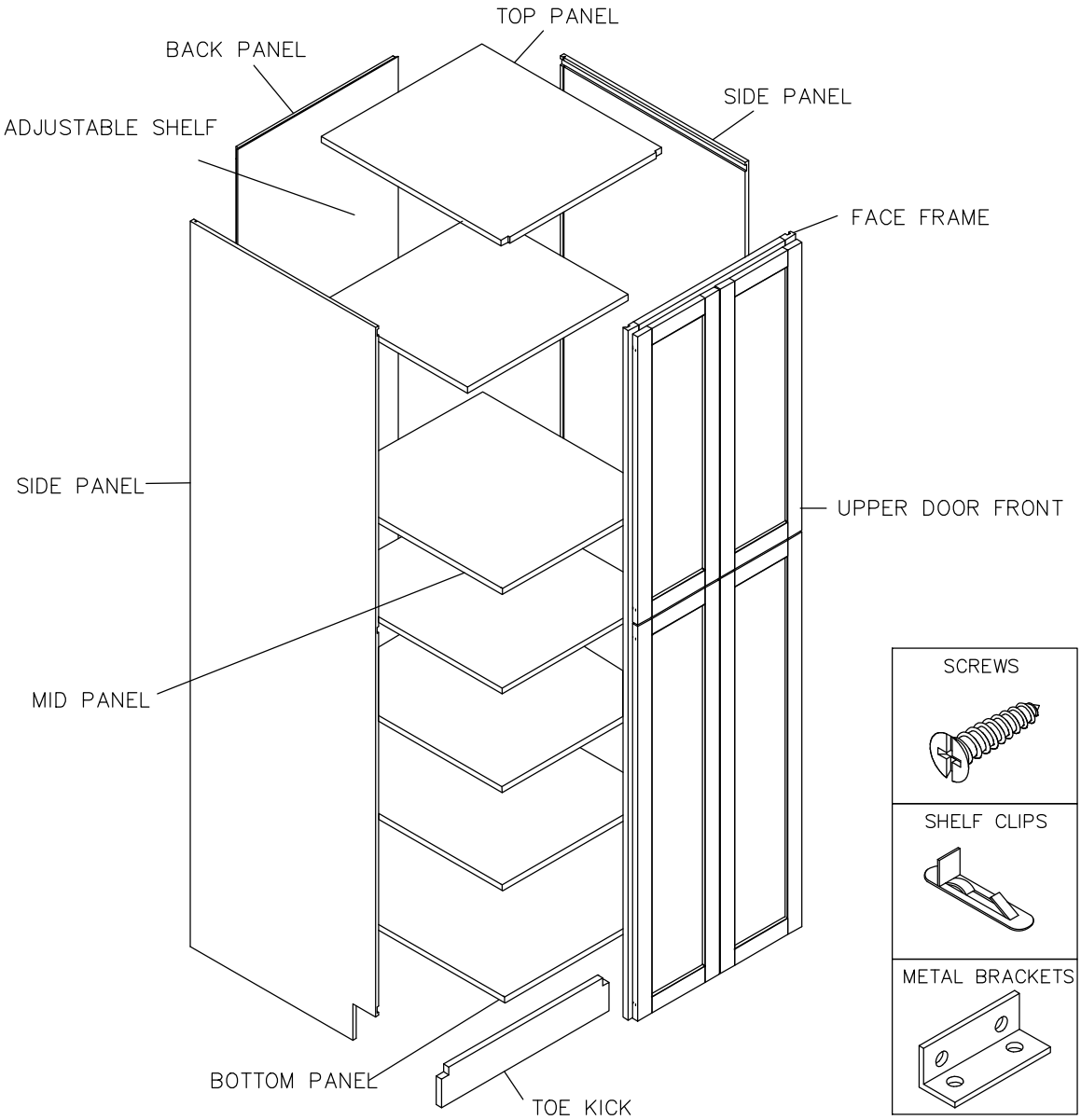

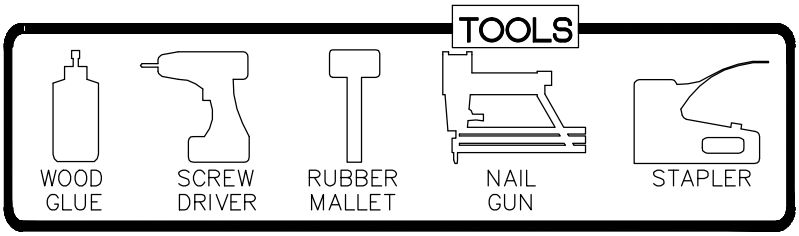

This instruction applies to the following items:

WP188427,WP248427,WP189027,WP249027,WP189627,WP249627
WP308427,WP309027,WP309627,