Widespread Lavatory Faucet With Brass Pop-Up

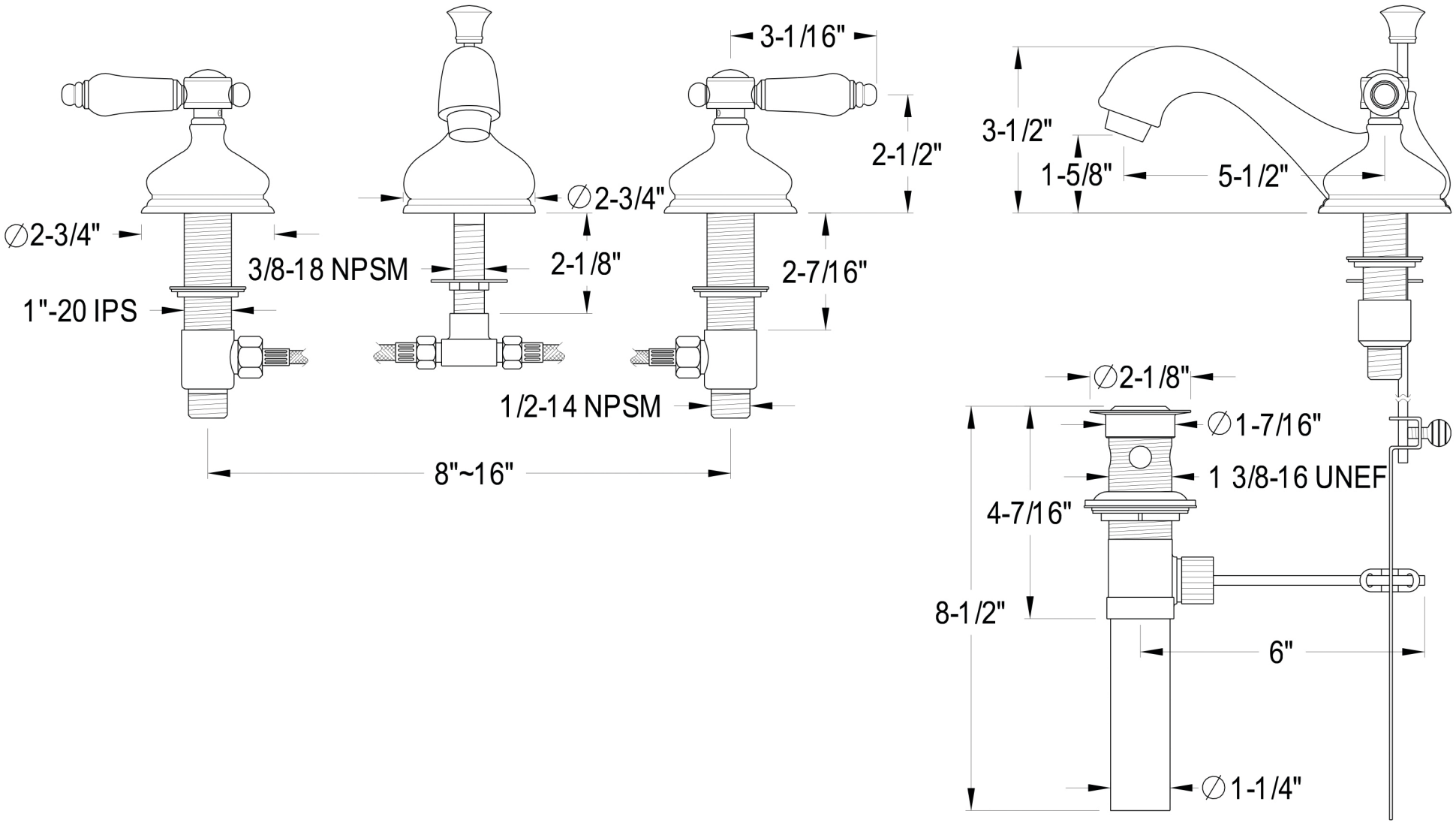

2017-12-B