2-Bag Material Collection System for 42-Inch, 48-Inch, and 54-Inch Accel Deep™ Mower Decks on Z300 Series ZTrak

JOHN DEERE

OPERATOR'S MANUAL

2-Bag Material Collection System for 42-Inch, 48-Inch, and 54-Inch Accel Deep™ Mower Decks on Z300 Series ZTrak

OMUC32588 ISSUE K5 (ENGLISH)

CALIFORNIA

Proposition 65 Warning

Diesel engine exhaust and some of its constituents are known to the State of California to cause cancer, birth defects, and other reproductive harm.

If this product contains a gasoline engine:

⚠ WARNING

The engine exhaust from this product contains chemicals known to the State of California to cause cancer, birth defects or other reproductive harm.

The State of California requires the above two warnings.

John Deere Power Products
North American Edition
PRINTED IN U.S.A.

Introduction

Thank You for Purchasing a John Deere Product

We appreciate having you as a customer and wish you many years of safe and satisfied use of your machine.

MX00654,000020B-19-17SEP25

Using Your Operator's Manual

Read this operator's manual, watch the safety video, and review the safety signs on your machine before use. They all contain important safety information and operating instructions that must be followed to help keep you and others safe. Be sure everyone who uses the machine has read the manual, reviewed the safety signs, and knows how to use the machine safely and properly.

Your machine was designed and built to be operated in accordance with all the safe operating instructions. Since it was designed to cut grass, it can amputate hands and feet and throw objects. If you do not follow safety instructions, serious injury or death can occur.

This operator manual is organized in sections to help you find information quickly. You can use this manual to find answers to many of your operating and servicing questions. An index at the end of this book helps you find needed information quickly. Contact your dealer if this manual does not answer your questions.

Before using your machine:

- Know how to operate the machine. The Operating Controls section helps you understand the controls of your machine and what they do.
- Prepare your machine and the mowing area by performing required daily checks outlined in the General Instructions section.
- Follow instructions in the Preventing Injuries section, especially related to:
  - Keeping children safe by following instructions in the Protect Children section.
  - Avoiding injury on slopes and near terrain hazards by following instructions in the Operating on Slopes and Near Terrain Hazards section.
  - Follow the instructions in the Avoid Thrown Objects section and keep all guards in place, including discharge chute.
  - Cleaning machine during use and before storing as outlined in the Prevent Fires section.
- Understand how to service and inspect your machine.

If you do not understand the instructions or have questions, contact your dealer.

The machine shown in this manual can differ slightly from your machine.

RIGHT-HAND and LEFT-HAND sides are determined by facing in the direction that the machine travels when going forward. When you see a broken line (------), the item referenced is hidden from view.

Before delivering this machine, your dealer performed a predelivery inspection to ensure best performance.

This manual is an important part of your machine. Keep this manual with the machine when you sell it.

OUO2005,000078D-19-11FEB20

John Deere Is at Your Service

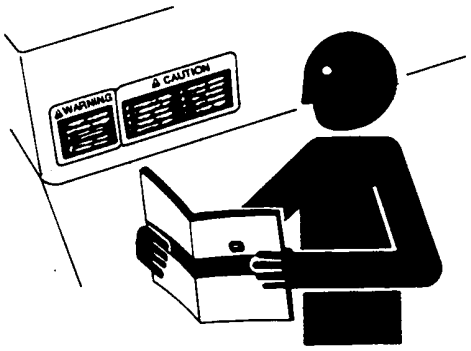

TS201—UN—15APR13

Customer satisfaction is important to John Deere.

Our dealers strive to provide you with prompt, efficient parts, and service:

• Maintenance and service parts to support your equipment.

• Trained service technicians and the necessary diagnostic and repair tools to service your equipment.

• John Deere replacement parts, repair services, and information for maintenance or repair are available. For more information, please visit deere.com or deere.ca.

DX,IFC,JDS-19-30SEP25

Special Messages

Your manual contains special messages to bring attention to potential safety concerns and machine damage, as well as helpful operating and servicing information. Please read all the information carefully to avoid injury and machine damage.

CAUTION: Avoid injury! This symbol and text highlight potential hazards or death to the operator or bystanders that may occur if the hazards or procedures are ignored.

IMPORTANT: Avoid damage! This text is used to tell the operator of actions or conditions that might result in damage to the machine.

NOTE: General information is given throughout the manual that may help the operator in the operation or service of the machine.

MX00654,000020D-19-04AUG25

Service Literature

If you would like to purchase a copy of the Parts Catalog or Technical Manual for this machine, visit The John Deere Technical Information Store at:

https://techpubs.deere.com/

or call:

- **U.S. & Canada:** 1-800-522-7448.
- **All Other Regions:** Your John Deere dealer.

TH84124,0000199-19-04AUG25

Parts

We recommend John Deere quality parts and lubricants, available at your John Deere dealer.

When you order parts, your John Deere dealer needs the serial number or product identification number (PIN) for your machine or attachment. These are the numbers that you recorded in the Product Identification section of this manual.

Order Service Parts Online

Visit https://partscatalog.deere.com/jdrc/ for your Internet connection to parts ordering and information.

TC00531,00000E9-19-04AUG25

Contents

Page

Product Identification
Product Compatibility 00-1
Record Purchase Information 00-1
Record Identification Numbers 00-1

Safety Labels with Text
Safety Label Location - Material Collection System 05-1
Safety Label Location - Power Flow High Performance 05-2
Understanding the Machine Safety Labels 05-2
WARNING—CAUTION 05-2
WARNING 05-3
CAUTION 05-3

Safety Labels without Text
Safety Label Location - Material Collection System 06-1
Safety Label Location - Power Flow High Performance 06-1
Understanding the Machine Safety Labels without Text 06-1
Read Operator's Manual 06-2

Safety
Read Safety in Machine Operator's Manual 15-1
Parking Safely 15-1
Protect Children 15-1
Service and Maintenance 15-1
Disposing of Waste Products and Chemicals 15-1

Preparing Vehicle
Installing Proper Ballast 20-1

Assembly
Parts Identification View - Material Collection System 25-1
Parts Identification View - Power Flow High Performance 25-3
Parts Identification View—Ballast Weight 25-3
Installing Toe Guard (42A Deck) 25-4
Prepare Shielding and Modify Discharge Chute (48A and 54A Power Flow Assembly) 25-5
Install Double Sheave (48A and 54A Power Flow Assembly) 25-5
Install Front Mounting Bracket (48A and 54A Decks) 25-6
Install Rear Stationary Shield (48A and 54A Decks) 25-6
Assemble and Install Blower Belt Shield 25-7

Page

Installing
Installing Front Ballast Weight Bracket 30-1
Installing Front Ballast Weight 30-1
Installing Braces 30-1
Installing Rear Pins 30-2
Installing Hitch 30-2
Assemble Bagger Support Rod to CargO Mount™ Bracket 30-3
Installing Mounting Post and MCS Support Rod 30-3
Assemble Hopper Top Assembly to Mounting Post 30-4
Installing Bags 30-5
Installation With Mulch Control Kit 30-6
Install Baffle (without Mulch Control Kit) 30-6
Installing Blades 30-7
Installing Blower Assembly (48A and 54A Decks) 30-7
Installing MCS Lower Chute (42A Deck) 30-9
Installing Upper Discharge Chute (42A Deck) 30-11

Operating
Getting the Best Performance from Your MCS 40-1
Unplugging Mower or Material Collection System 40-1

Removing and Storing
Removing MCS Assembly (42A Deck) 45-1
Storing Attachment 45-4
Removing Power Flow 45-4
Storing Power Flow 45-5
Replacing Drive Belt 45-5

Troubleshooting
Using Troubleshoot Chart 50-1
MCS Troubleshooting 50-1

John Deere Quality Statement
John Deere Quality 60-1

Original Instructions. All information, illustrations and specifications in this manual are based on the latest information available at the time of publication. The right is reserved to make changes at any time without notice.

COPYRIGHT © 2025
DEERE & COMPANY
Moline, Illinois
All rights reserved.
Previous Editions
Copyright © 2014, 2020, 2022, 2023

Product Identification

Product Compatibility

The 42 in, 48 in, 54 in Accel Deep™ Mower decks are compatible with the Z300 ZTrak™.

This Power Flow™ is compatible with the 48A and 54A mower decks for ZTrak™.

VS70618,0001546-19-09MAY22

Record Purchase Information

Record your purchase information in the spaces provided below.

DATE OF PURCHASE:

_____

DEALER NAME:

_____

DEALER PHONE:

_____

OUMX258,0000CEA-19-03DEC13

Record Identification Numbers

Power Flow™

ACCEL Series High-Performance Serial No. (010001 -)

If you need to contact an Authorized Service Center for information on servicing, always provide the product model and serial number.

You will need to locate the model and serial number for the Power Flow™ and record the information in the spaces provided below.

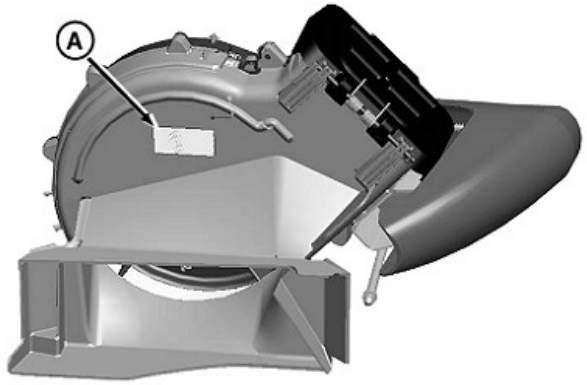

GXT002367—UN—01JUL15

DATE OF PURCHASE:

_____

DEALER NAME:

_____

DEALER PHONE:

_____

PRODUCT SERIAL NUMBER (A):

_ _ _ _ _ _ _ _ _ _ _ _ _ _ _ _ _ _ _ _

VS70618,0001547-19-23JUN22

Accel Deep is a trademark of Deere & Company
ZTrak is a trademark of Deere & Company
Power Flow is a trademark of Deere & Company

Safety Label Location - Material Collection System

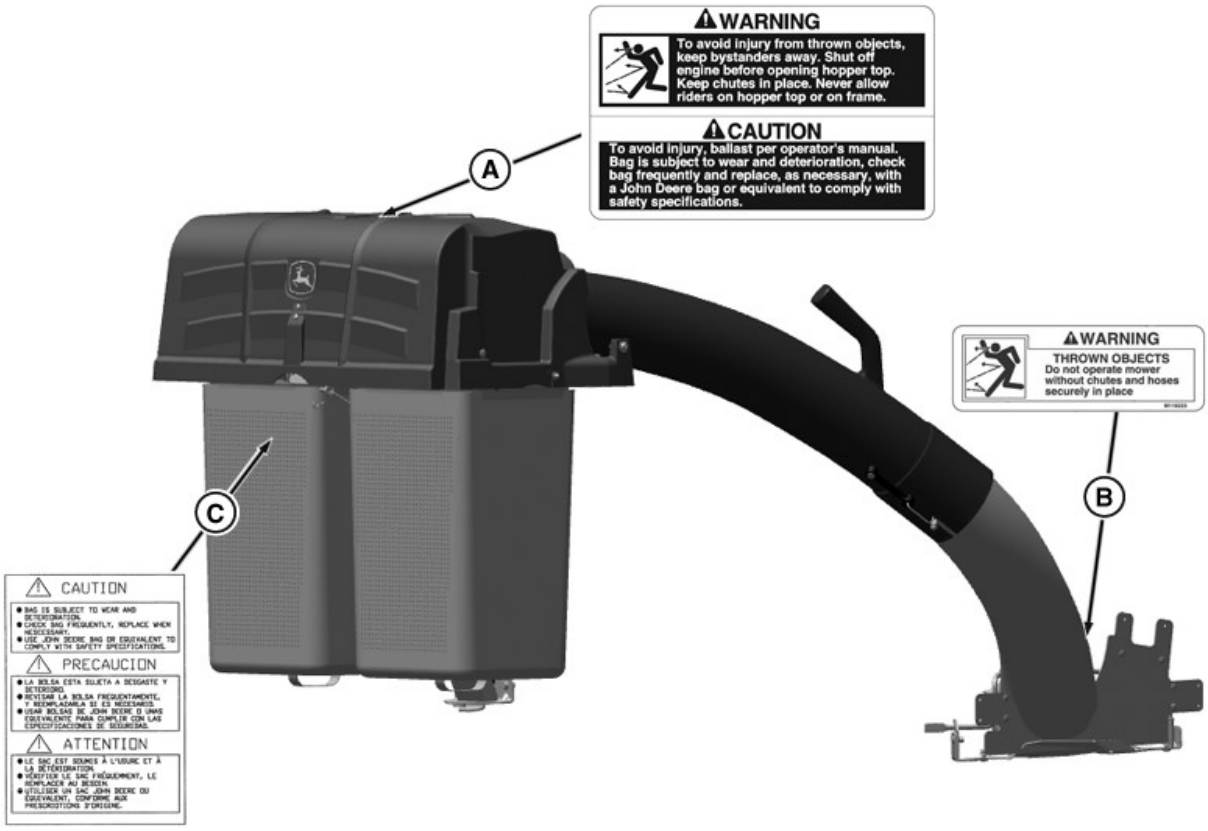

APY538260—UN—01JUN22

A—WARNING (M151187)
B—WARNING (M118223)
C—CAUTION (GC00215)

vs70618,1653301712210-19-23MAY22

Safety Label Location - Power Flow™ High Performance

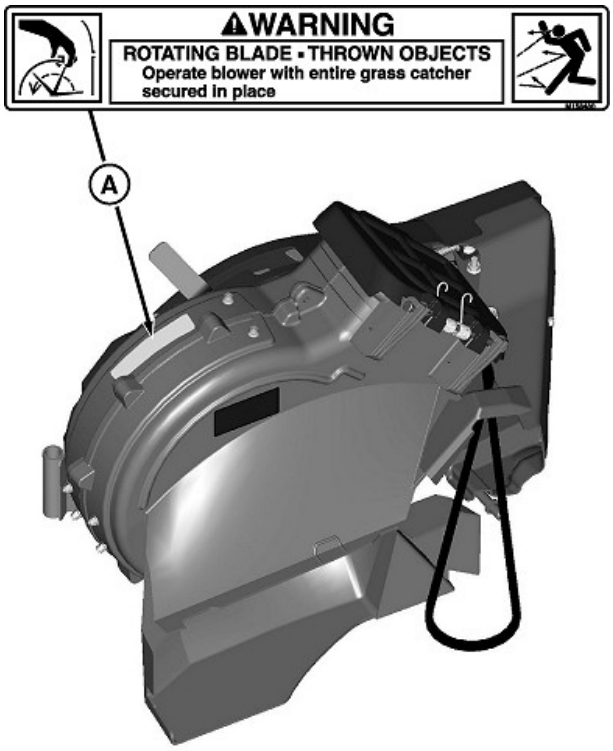

GXT002440—UN—12JUL15

A—WARNING (M158480)

vs70618,1653301582438-19-19JUL22

Understanding the Machine Safety Labels

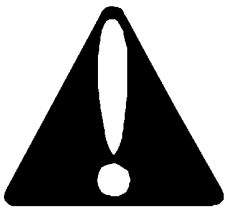

MXAL42363—UN—22MAY13

The machine safety labels shown in this section are placed in important areas on your machine to draw attention to potential safety hazards. DANGER or WARNING safety labels are located near specific hazards.

The operator's manual also explains any potential safety hazards whenever necessary in special safety messages that are identified with the word, CAUTION, and the safety-alert symbol.

On your machine safety labels, the words DANGER, WARNING, and CAUTION are used with this safety-alert symbol. DANGER identifies the most serious hazards:

- DANGER; The signal word DANGER indicates a hazardous situation which, if not avoided, will result in death or serious injury.
- WARNING; The signal word WARNING indicates a hazardous situation which, if not avoided, could result in death or serious injury.
- CAUTION; The signal word CAUTION indicates a hazardous situation which, if not avoided, could result in minor or moderate injury. CAUTION may also be used to alert against unsafe practices associated with events which could lead to personal injury.

Replace missing or damaged safety labels. Use this operator's manual for correct safety label placement.

There can be more safety information contained on parts and components sourced from suppliers that is not reproduced in this operator's manual.

French or Spanish Safety Labels and Operator's Manual

Operator's manuals and safety labels with content in French or Spanish are available for this machine through authorized John Deere dealers. See your John Deere dealer.

NOTE: Spanish, French, and no-text labels are included in kit and may be applied over English in appropriate regions.

sb31882,1657548665724-19-11JUL22

WARNING—CAUTION

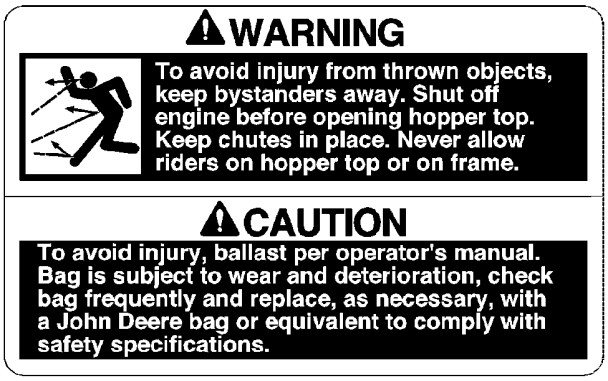

GXT001245—UN—28OCT13

WARNING

To avoid injury from thrown objects, keep bystanders away. Shut off engine before opening hopper top. Keep chutes in place. Never allow riders on hopper top or on frame.

CAUTION

To avoid injury, ballast per operator's manual. Bag is subject to wear and deterioration, check bag frequently

Power Flow is a trademark of Deere & Company

and replace, as necessary, with a John Deere bag or equivalent to comply with safety specifications.

OUO2005,000025A-19-04MAY20

WARNING



GXT001508—UN—18JUN14

THROWN OBJECTS

Do not operate mower without chutes and hoses securely in place.



GXT001246—UN—28OCT13

If French labeling is required, place M133741 label over existing label. If Spanish labeling is required, place M158499 label over existing label. Place M158500 label over existing label if the PowerFlow™ kit is intended for global distribution and includes the text-free safety signs in base equipment.

ROTATING BLADES - THROWN OBJECTS

Operate Blower with entire grass catcher secured in place.

vs70618,1653301284320-19-19JUL22

CAUTION



GXT001509—UN—18JUN14

- Bag is subject to wear and deterioration.
- Check bag frequently, replace when necessary.
- Use a John Deere bag or equivalent to comply with safety specifications.

OUO2004,00009B7-19-16JUL14

Safety Labels without Text

Safety Label Location - Material Collection System

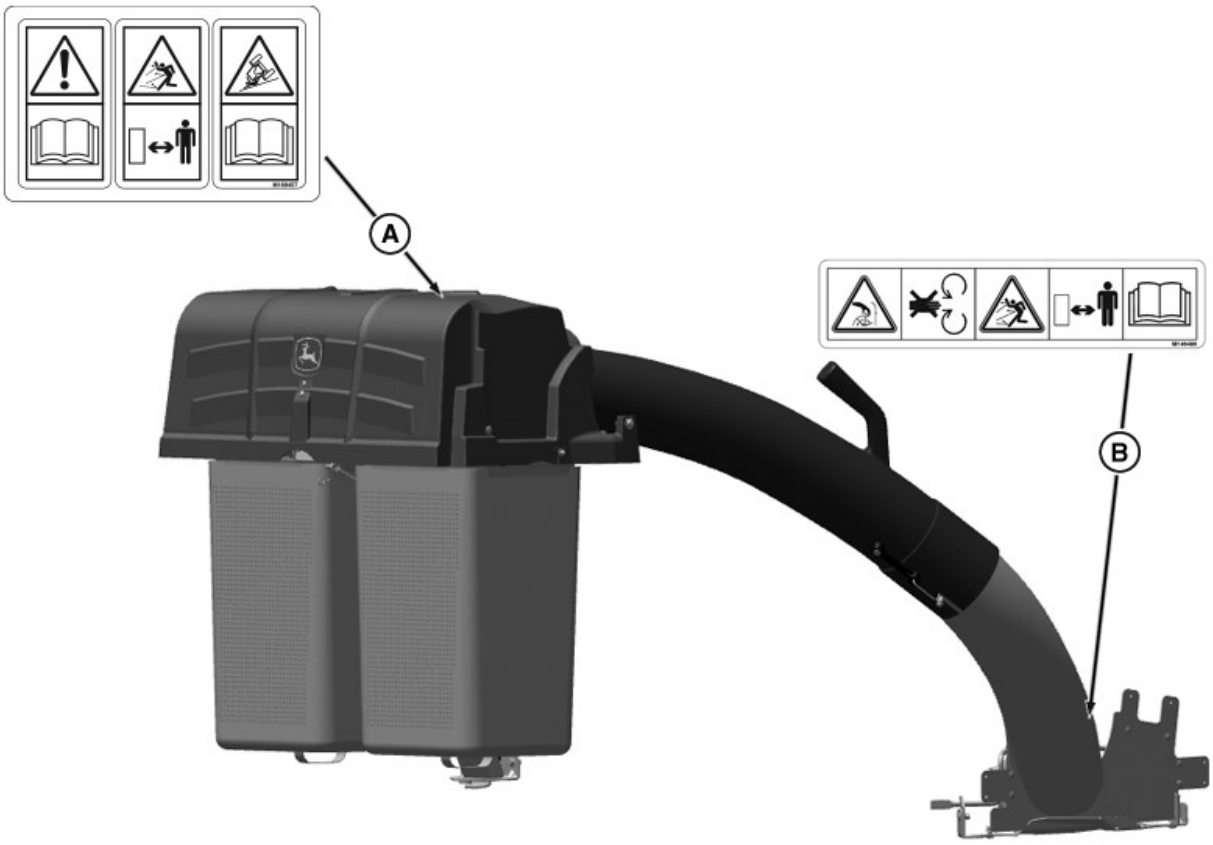

APY538261—UN—01JUN22

A—READ OPERATOR'S MANUAL (M169457)

B—WARNING (M149489)

vs70618,1653302052199-19-19JUL22

Safety Label Location - Power Flow™ High Performance



MXT009202—UN—19SEP13

- Do not put hands or feet under or into mower when engine is running.
- Thrown Objects - Before mowing, clear area of objects that may be thrown by blade. Do not operate mower without discharge chute or entire grass catcher in place.
- Stay at a safe distance from machine.
- Read operator’s manual.

vs70618,1653302102264-19-23JUN22

Understanding the Machine Safety Labels without Text



TCT005498—UN—11SEP12

The machine safety labels shown in this section are placed in important areas on your machine to draw attention to potential safety hazards.

On your machine safety labels, the words DANGER, WARNING, and CAUTION are used with this safety-alert symbol. DANGER identifies the most serious hazards.

MX00654,0000389-19-09JAN23

Power Flow is a trademark of Deere & Company

Read Operator’s Manual

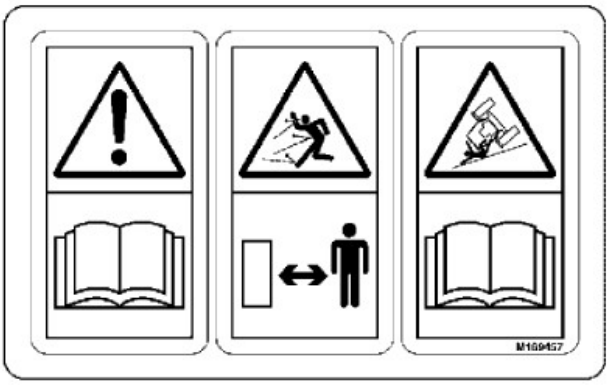

GXT001478—UN—29AUG14

- Read Operator’s Manual
- Avoid Injury From Thrown Objects
- Avoid Injury From Tipping

OUO2004,0000A2A-19-29AUG14

Read Safety in Machine Operator's Manual

Read the general safety operating precautions in your machine operator's manual for additional safety information.

OUMX068,0000230-19-18SEP13

Parking Safely

Always apply the park brake and remove the key or key pin before leaving the machine unattended. Children or others may attempt to move or operate an unattended machine.

- Bring the machine to stop on a level surface.
- Disengage mower blades or other attachments.
- Lower attachments to the ground.
- Apply the park brake.
- Shut the machine OFF.
- Remove the key or key pin.
- Wait for all moving parts to stop before you leave the seat.
- Disconnect battery before maintenance.

OUO2005,0000788-19-12APR23

Protect Children

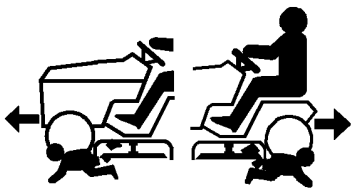

MXAL41929—UN—18FEB13

- Children can be killed or seriously injured by riding mowers when operators do not follow safe operating practices.
- Do not mow in reverse. Operating with the mower engaged while backing up is discouraged.
- Never give children a ride on a mower or in a cart behind the mower, even when the blades are off. They can fall off and be run over or cut by the mower blades. Children can interfere with mower operation. Children who have been given rides in the past can suddenly appear in the mowing area for another ride. If you are not aware, they can be run over or backed over by the mower.
- Children are often attracted to lawn mowers and mowing activities, especially if they have been given rides before. They do not know if the blades are rotating or understand that they can be killed or seriously injured even if the blades are not rotating.
- Keep children indoors and out of the mowing area when the mower is being operated. Keep children under the watchful eye of a responsible adult, other than the operator. If there is not a responsible adult to ensure that children stay indoors, DO NOT mow.
- Be alert to the presence of children or others. Turn off the mower blades and stop the machine if someone enters the mowing area.
- Look in the direction the machine is traveling. Before and while backing, turn off the mower blades and look down and behind the machine carefully, especially for children.
- Use extreme care when approaching objects that block your view, such as blind corners, shrubs, or trees, especially while backing. They can hide a child.

MX00654,00002ED-19-30MAR20

Service and Maintenance

- Proper service and maintenance of the machine is essential.
- Keep all parts in good condition, keep all nuts and bolts tight, and repair any damage immediately. Stop and inspect the machine immediately if you strike an object.
- Ensure that all safety devices, discharge chute, and grass catcher components are in good condition and replace when necessary.
- Understand service procedures thoroughly before working on the machine. If you do not understand the service procedures or are uncomfortable working in your machine, contact your John Deere dealer or other service provider.
- Disconnect the battery or all spark plug wires before servicing the machine. Disconnect negative terminal first and positive last. Install positive terminal first and negative last.
- Some components could have stored energy in springs or hydraulic components. Servicing procedures described in the Service section describe how to perform service and maintenance tasks safely.
- Support any machine elements that must be raised for service work. Use jack stands or service locks to support components when needed.

MX00654,00002EE-19-17OCT25

Disposing of Waste Products and Chemicals

- Waste products, such as used oil, fuel, coolant, brake fluid, and batteries can harm the environment and people.
- Do not use beverage containers for waste fluids – someone can mistakenly drink from them.

- A Safety Data Sheet (SDS) provides specific details on chemical products: Physical and health hazards, safety procedures, and emergency response techniques. The seller of the chemical products used with your machine is responsible for providing the SDS for that product.
- To learn how to recycle or properly dispose of waste products generated from service, see your local recycling center, or John Deere dealer, or other service provider. If you wish to discard the machine, contact your local recycling center, John Deere dealer, or other service provider.

MX00654,00002EF-19-17OCT25

Installing Proper Ballast

CAUTION: Avoid injury! Operating with a grass catcher or other attachment can affect stability on slope. Use front weights on your tractor if necessary.

When the attachment is removed, also remove any ballast that was added to the machine.

Only use attachments and accessories recommended by the manufacturer.

NOTE: Ballast is extra weight that can be added to the machine to provide additional stability.

Install the proper front ballast to help counterbalance the total weight of the MCS. Remove ballast when the MCS is removed to ensure proper operation of the machine when not bagging.

VS70618,0001548-19-19JUL22

Parts Identification View - Material Collection System

42A Deck

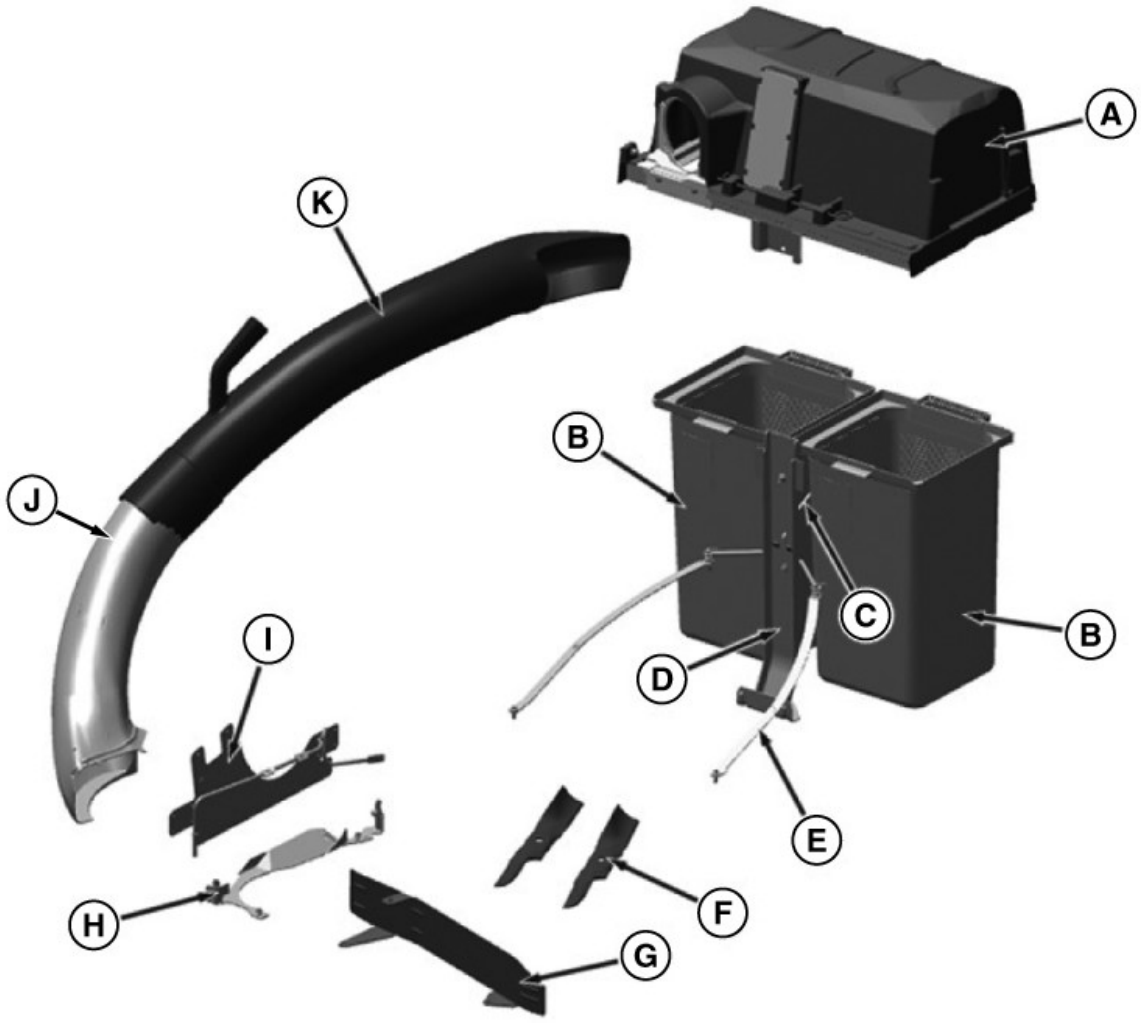

GX100382—UN—19JUL22

Key	Description	Quantity
A	Hopper Top Assembly	1
B	Grass Bag	2
C	Gusset Rod	1
D	Mounting Post	1
E	Brace	2
F	Blades: 42 in	2
G	Baffle	1
H	Toe Guard	1
I	Hinge Assembly	1
J	Lower MCS Chute	1
K	Upper MCS Chute	1

48A and 54A Decks

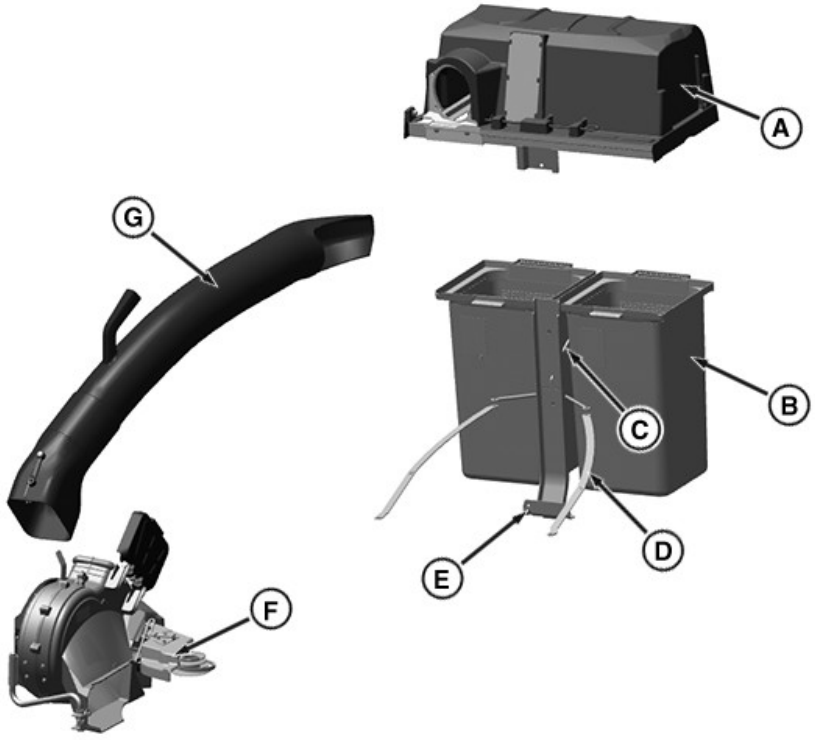

APY538274—UN—01JUN22

Key	Description	Quantity
A	Hopper Top Assembly	1
B	Grass Bag	2
C	Gusset Rod	1
D	Brace	1
E	Mounting Post	2
F	Power Flow™	2
G	MCS Chute	1

Power Flow is a trademark of Deere & Company

vs70618,1654067882976-19-19JUL22

Parts Identification View - Power Flow™ High Performance

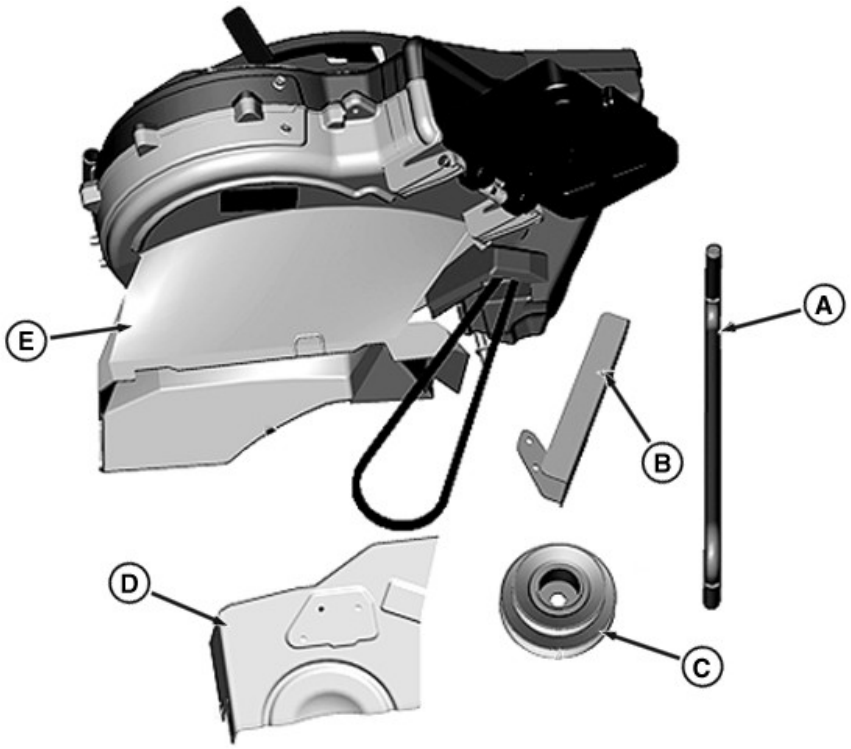

APY538289—UN—06JUN22

Key	Description	Quantity
A	Mount Rod	1
B	Rear Stationary Shield	1
C	Double Sheave	1
D	Deck Belt Shield	1
E	Power Flow™	1

Power Flow is a trademark of Deere & Company

vs70618,1654157251039-19-08JUL22

Parts Identification View—Ballast Weight

Power Flow is a trademark of Deere & Company

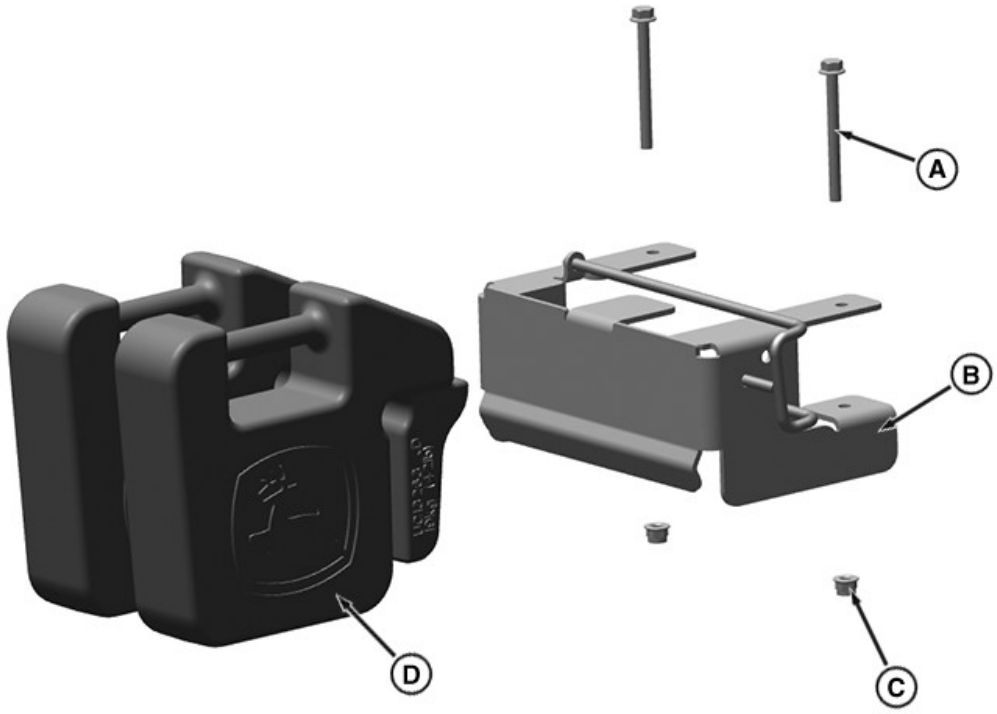

APY538269—UN—30JUN22

Legend	Description	Quantity
A	Bolt	2
B	Ballast Weight Bracket	1
C	Lock Nut	2
D	Suitcase Weight	2

vs70618,1654157553512-19-02MAR23

Installing Toe Guard (42A Deck)

NOTE: When removing the rear (M8) carriage bolt and nut from the toe guard, place a 13 mm deep socket on top of the nut and tap into place with a rubber mallet if the socket will not fit freely over nut due to tight clearances.

1. Remove existing toe guard.

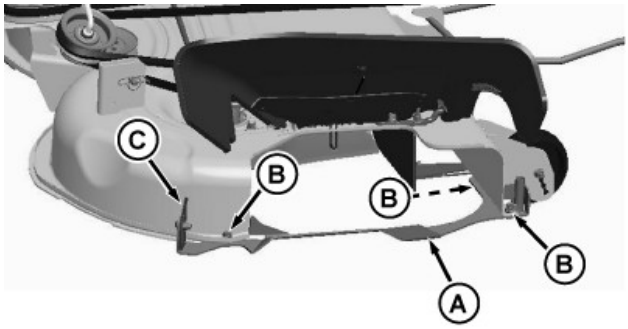

GXT002864—UN—26JAN16

2. Install new toe guard (A) into the same holes using new hardware, three M8 carriage bolts (B), and lock nuts.

3. Install latch (C) to toe guard in the slot with M8 carriage bolt and lock nut. Tighten lock nuts to 40 N·m (29 lb·ft).

NOTE: If supplied in kit, install rubber liner to metal inner guard with M6 x 16 hex screw and M8 x 16 carriage bolt.

4. Latch plate must be to the front of the toe guard slotted tab, with bottom of latch contacting the toe guard to prevent rotation.

NOTE: The latch guard can be adjusted later for fit and latch force.

vs70618,1654063076880-19-20JUL22

Prepare Shielding and Modify Discharge Chute (48A and 54A Power Flow™ Assembly)

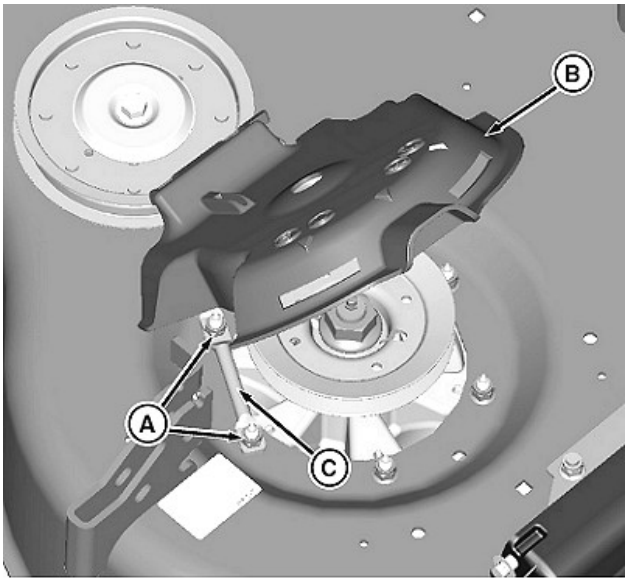

GXT002370—UN—08JUL15

Picture Note: 54 inch Deck Shown

NOTE: Following the procedure for shielding and sheave replacement on 48A and 54A may be easier if the deck lift system is disconnected and deck is slid to the right.

1. Remove two lock nuts (A) and deck shield (B) with wireform (C).

NOTE: Belt shield and wireform will not be used. Set aside.

2. Install two lock nuts back onto spindle and tighten to 25 N·m (18 lb·ft).

Power Flow is a trademark of Deere & Company

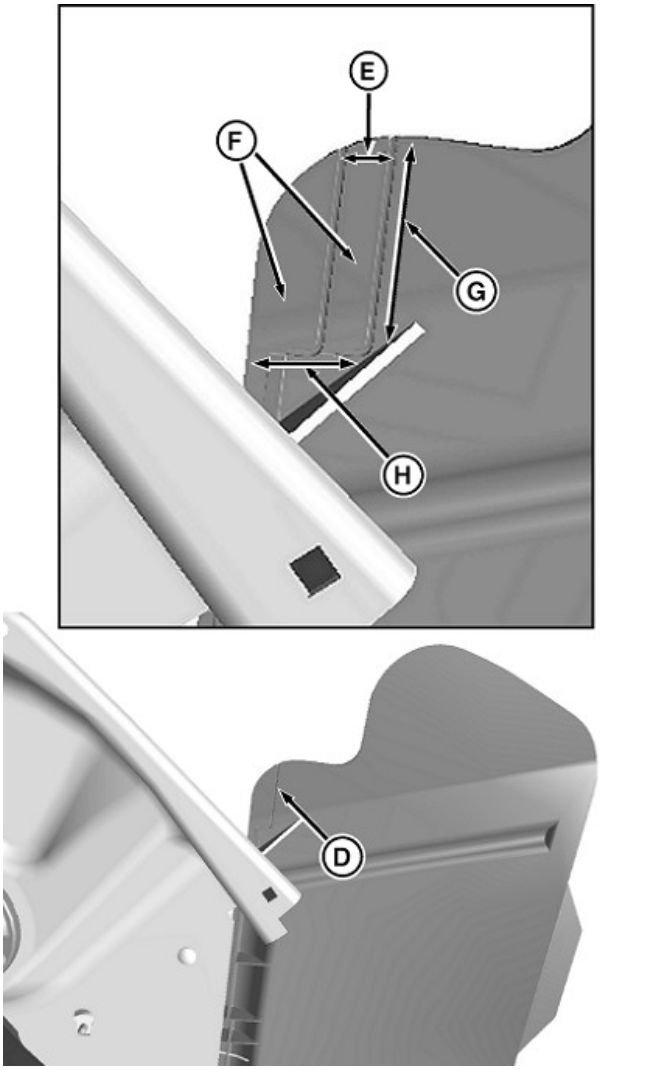

GXT002368—UN—01JUL15

Picture Note: View from under 54 inch Deck Shown

3. Locate embossed cut line (D) on deck discharge chute. Measure 25 mm (1 in) (E) above line and mark section (F).

NOTE: To verify measurements, be certain that length is approximately 68.0 mm (2-11/16 in) (G) and inward dimension is approximately 45.9 mm (1-13/16 in) (H).

4. Cut out and remove section (F).

VS70618,000156B-19-19JUL22

Install Double Sheave (48A and 54A Power Flow™ Assembly)

1. Disengage PTO.

⚠ CAUTION: Avoid injury! Mower blades are sharp. Always wear gloves when handling mower blades or working near blades.

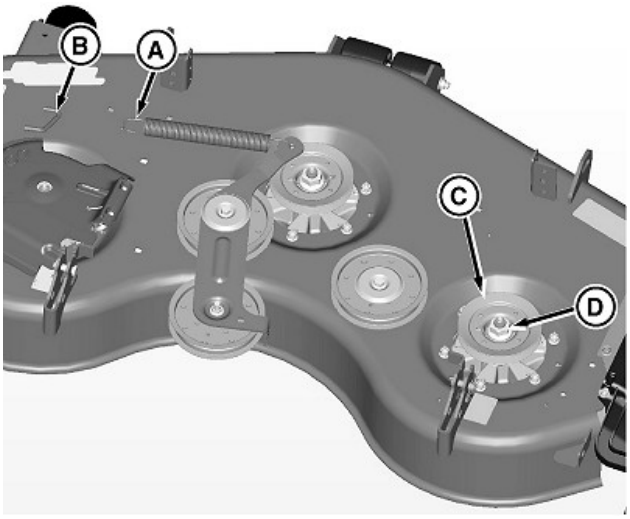

GXT002378—UN—08JUL15

2. Remove end of tension spring (A) from bracket (B) on deck.
3. Remove mower deck belt from right spindle sheave (C). Inspect and replace belt if needed.
4. With blade held stationary against wood block, remove and keep spindle nut (D). Remove right spindle sheave (C).

IMPORTANT: Avoid damage! Tightening spindle nut against blade bolt may damage bolt and spindle threads. Use a pipe wrench or another suitable device to hold double sheave stationary while tightening spindle nut.

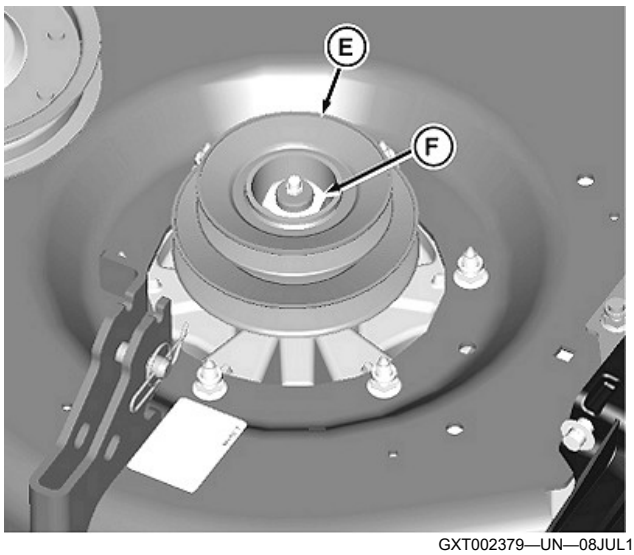

GXT002379—UN—08JUL15

5. Install double sheave (E) on spindle shaft against deck using a large pulley.
6. With blade held stationary against wood block, install spindle nut (F) and tighten to 163 N·m (120 lb-ft).
7. Install original mower deck belt in lower groove of double sheave, and connect tension spring onto bracket on deck.
8. Safely unblock and lower mower deck to ground.
9. Clean and store right spindle sheave for use if Power Flow™ and double sheave are removed.

VS70618,000156C-19-19JUL22

Install Front Mounting Bracket (48A and 54A Decks)

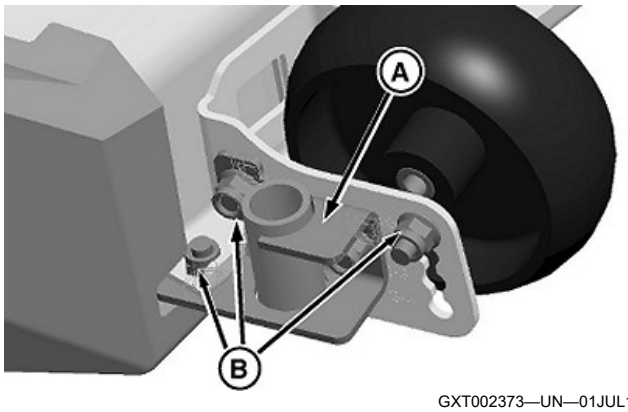

GXT002373—UN—01JUL15

Install bracket assembly (A) to gauge wheel bracket with three M6 carriage bolts and lock nuts (B) as shown. Tighten to 10—18 N·m (7—13 lb·ft).

NOTE: Removal of gauge wheel will improve access for installation of bracket assembly. Reinstall gauge wheel after bracket assembly is complete.

VS70618,000156D-19-19JUL22

Install Rear Stationary Shield (48A and 54A Decks)

CAUTION: Avoid injury! Mower blades are sharp. Always wear gloves when handling mower blades or working near blades.

Power Flow is a trademark of Deere & Company

48A (ZTrak)

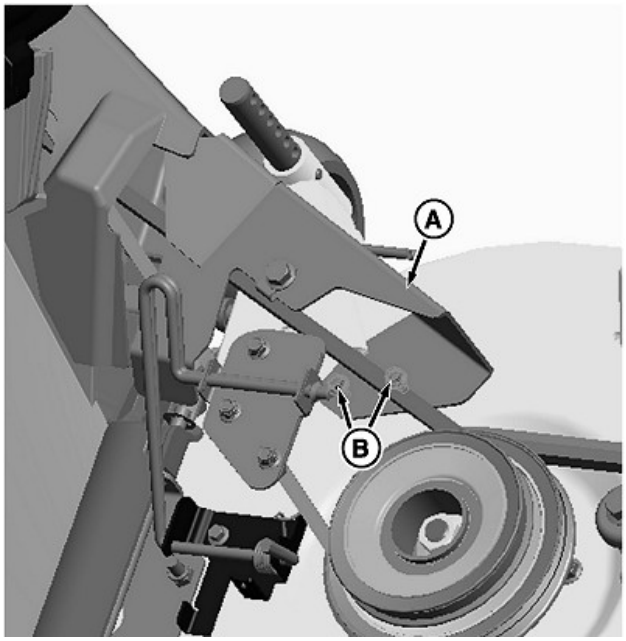

GXT002400—UN—08JUL15

Install stationary shield (A) with two M6 self-tapping screws (B).

54A (ZTrak)

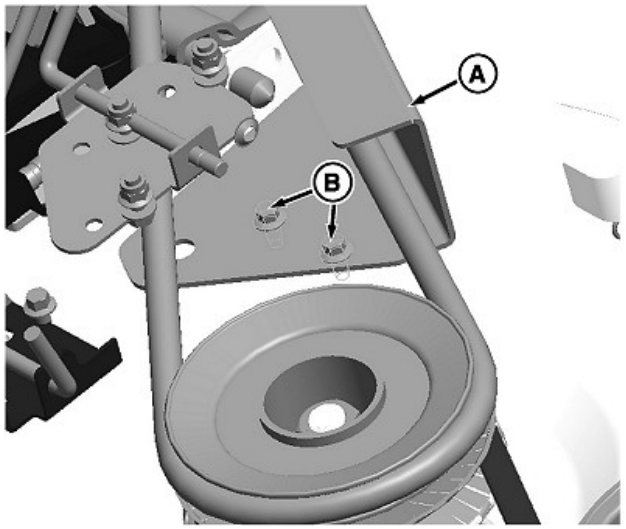

GXT002401—UN—08JUL15

Install stationary shield (A) with two M6 self-tapping screws (B).

NOTE: If deck hole becomes stripped out during M6 screw installation, an M6 lock nut may be placed on the underside of the deck to retain screw.

VS70618,000156E-19-19JUL22

Assemble and Install Blower Belt Shield

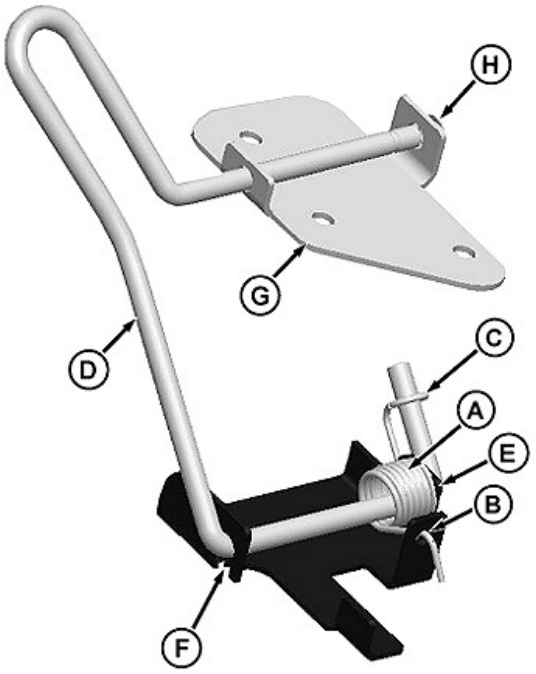

GXT002375—UN—31AUG15

1. Install torsion spring:
   - Insert torsion spring (A) straight leg into mounting bracket hole (B) and place spring hook (C) over edge of bracket.
   - Insert wire handle (D) through torsion spring center, and then through hole (E).
   - With wire handle in bracket slot (F), rotate handle clockwise one rotation; in the process the wire leg picks up the spring hook end.
2. Place the hinge bracket (G) (with three holes), over the wire handle as shown. Push the smaller (6.35 mm ID) screw retainer (H) over the wire handle until it snaps into the groove.

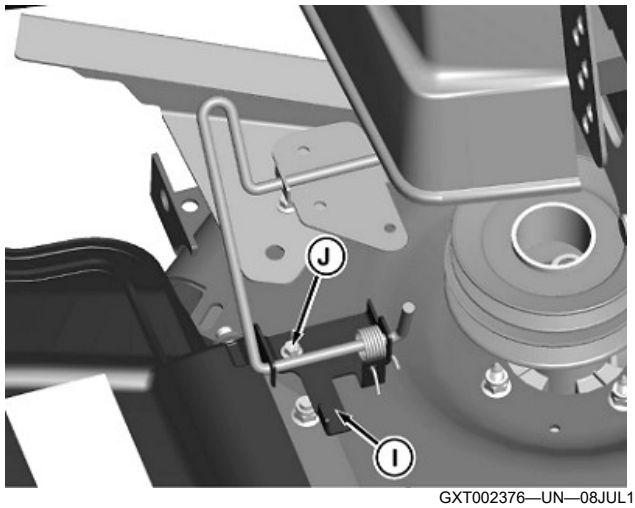

GXT002376—UN—08JUL15

3. Install wire handle mounting bracket (I) onto mower deck with M6 x 12 self-tapping screw (J) or use M8 carriage head and lock nut (if supplied in kit for 48HC and 54HC decks).

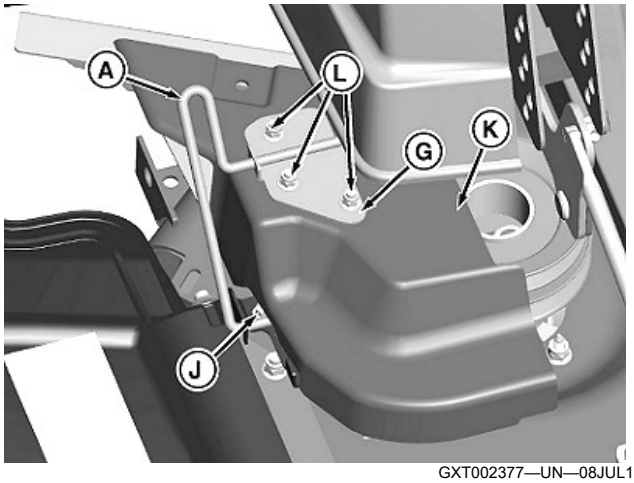

GXT002377—UN—08JUL15

4. Rotate wire handle (A) forward and position front blower belt shield (K) onto rear stationary shield and under hinge bracket (G).
5. Rotate handle (A) back until three holes in hinge bracket (G) align with the front shield holes. Insert three M6 x 16 bolts (L) and fasten with M6 flange lock nuts.
6. Check for proper operation and alignment of blower belt shield and blower belt shield spring.
7. Loosen M6 x 12 self-tapping screw (J), or M8 carriage head and lock nut that holds mount bracket to deck (if supplied in kit for 48HC and 54HC decks). Re-position blower belt shield and blower belt shield spring for alignment, if needed.

VS70618,000156F-19-19JUL22

Installing Front Ballast Weight Bracket

CAUTION: Avoid injury! Operating with a grass catcher or other attachment can affect stability on a slope.

When the attachment is removed, remove any ballast that was added to the machine as well.

Use only attachments and accessories recommended by the manufacturer.

NOTE: Ballast is extra weight that can be added to the machine to provide additional stability.

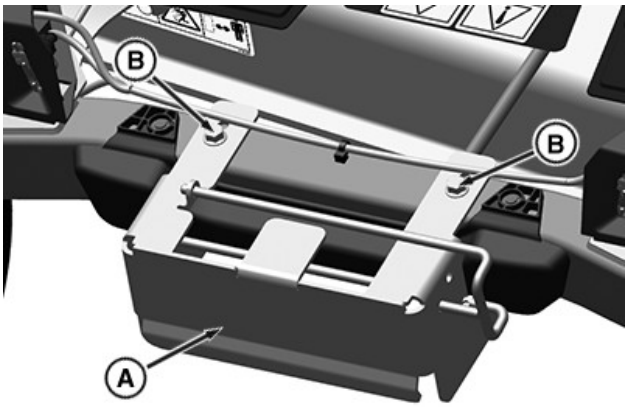

APY538258—UN—01JUN22

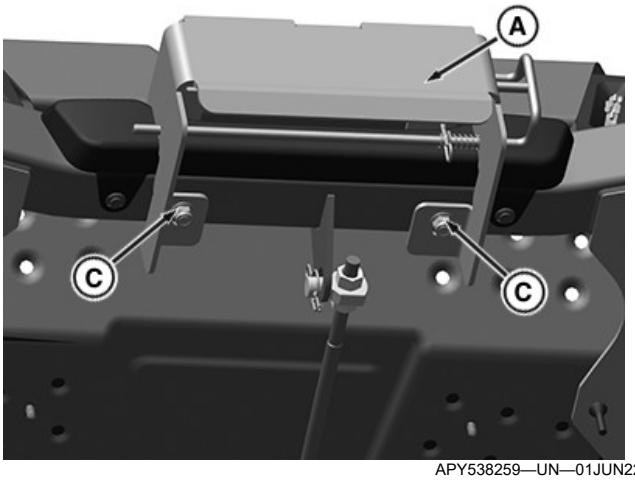

APY538259—UN—01JUN22

1. Verify that mower deck is lowered to the ground and not hanging from the vehicle.
2. Lift the foot rest up for access to front frame tube.
3. Slide weight bracket over the front frame tube.
4. Mount weight bracket (A) to machine platform and secure it with two M8 bolts (B) and lock nuts (C).

vs70618,1652768569870-19-19JUL22

Installing Front Ballast Weight

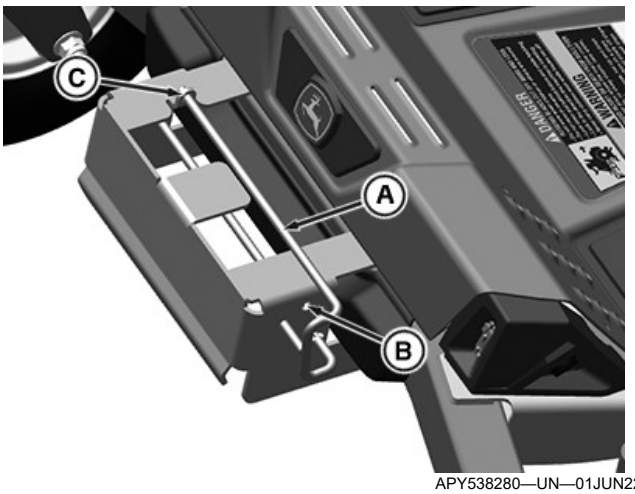

APY538280—UN—01JUN22

1. Pull out and rotate spring locking pin (A) rearward to remove it from the retaining tab (C). Release locking pin into the top hole (B).

CAUTION: Avoid injury! Weights are heavy and can cause injury if dropped. Install one weight at a time.

2. Install suitcase weights (E) on the bracket.

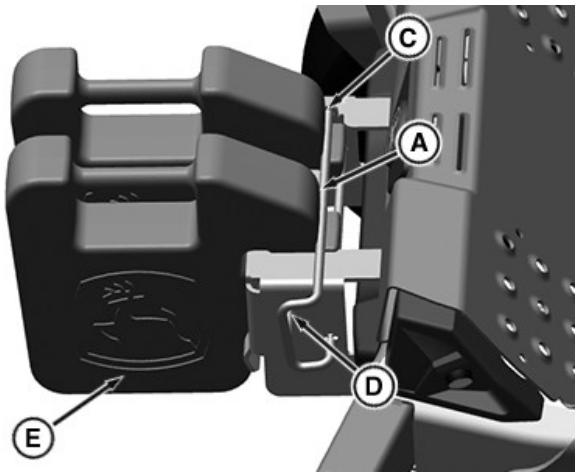

APY538281—UN—01JUN22

3. Pull out and rotate spring locking pin (A) forward and lock into place in the lower hole (D) and retaining tab (C).

vs70618,1652775970780-19-19JUL22

Installing Braces

1. Remove left seat support screw.

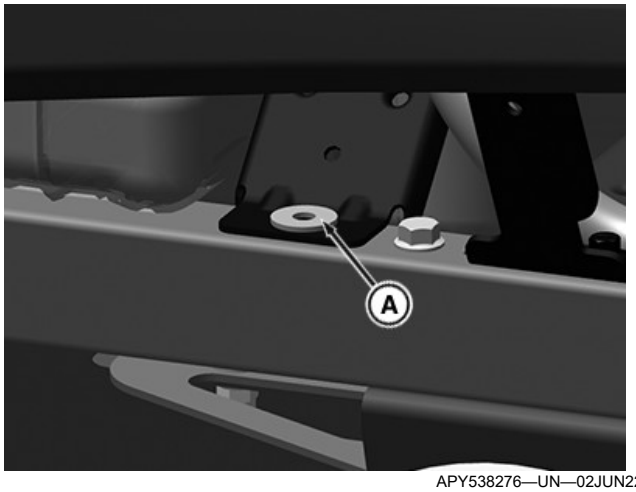

APY538276—UN—02JUN22

2. Position M8 washer (A) on top of seat support.
3. Position left brace on top of the washer. Upper end should be underneath engine guard tab.

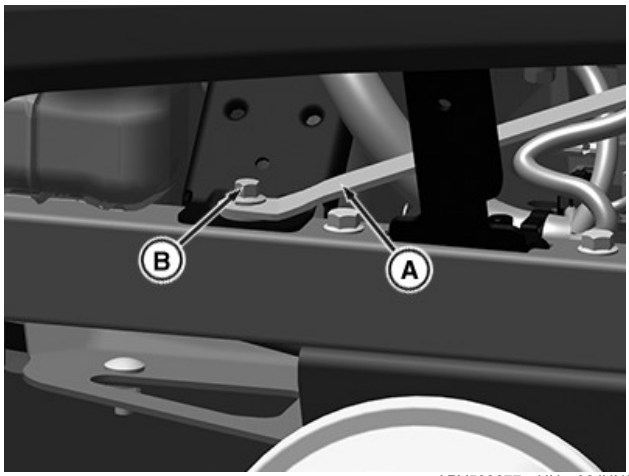

APY538277—UN—02JUN22

4. Install M8 self tapping screw (B) to secure the brace (A).
5. Repeat the procedure on the right side.

NOTE: Do not remove both seat support screws at once.

vs70618,1654007343983-19-19JUL22

Installing Rear Pins



APY538278—UN—02JUN22

1. Insert pin (A) down through engine guard tab hole and upper brace tab.
2. Fasten the pins (A) with M10 locknut.

vs70618,1654007554817-19-22JUN22

Installing Hitch

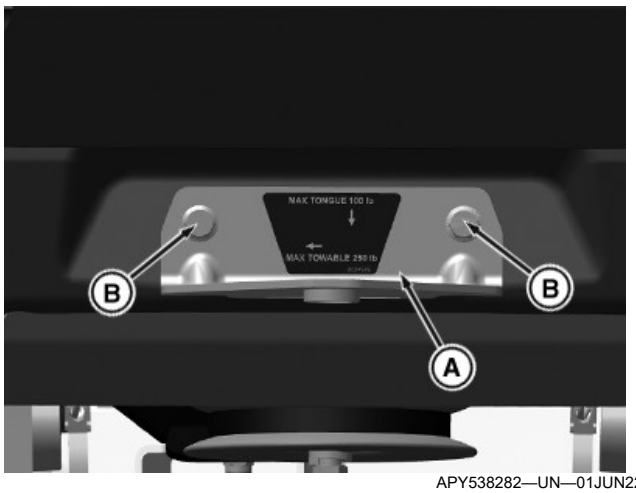

APY538282—UN—01JUN22

Install hitch (A) to the rear end of the machine using M8 screws (B) and locknuts.

vs70618,1652795915249-19-27JUN22

Assemble Bagger Support Rod to CargO Mount™ Bracket

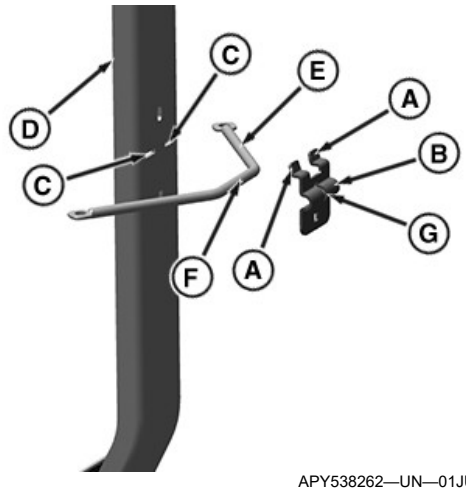

APY538262—UN—01JUN22

1. Insert both tabs (A) on cargo mount bracket (B) into slots (C) on mounting post (D).

NOTE: Assemble bagger support rod (E) with bent ends pointing down as shown.

2. Insert bagger support rod (E) between cargo mount bracket and mounting post.

NOTE: Tab (F) on support rod must fit into slot (G) on cargo mount bracket before tightening.

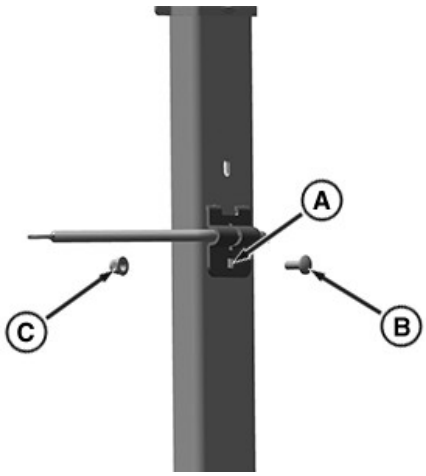

APY538263—UN—15JUN22

3. Insert round head bolt (B) through cargo mount bracket and into hole (A) in mounting post.
4. Secure bolt with lock nut (C).

vs70618,1655786442206-19-19JUL22

Installing Mounting Post and MCS Support Rod

1. Park machine safely. (See Parking Safely in the Safety section.)
2. Put deck lift lever in lowest position.

NOTE: Deck in lowest position allows the most access when installing the lower chute.

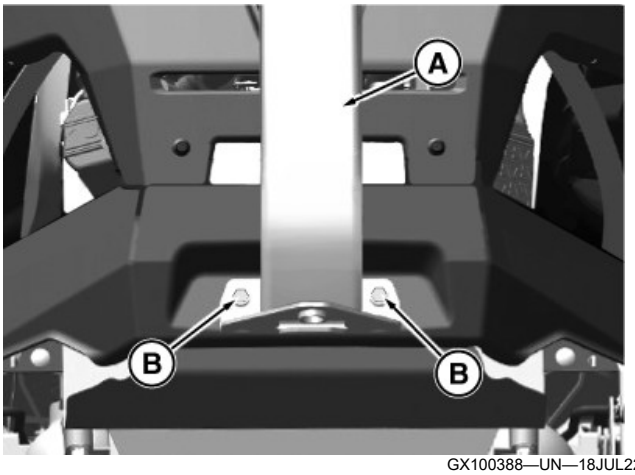

GX100388—UN—18JUL22

3. Place the mounting post (A) on the hitch.

NOTE: Nuts must be installed at the front of the machine and bolts must be installed at the rear.

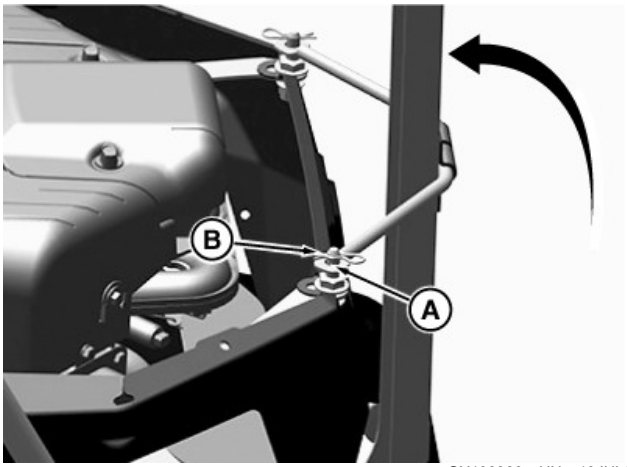

GX100389—UN—19JUL22

4. Raise mounting post upward toward the machine and insert support rod ends (A) over ends of pins previously installed.

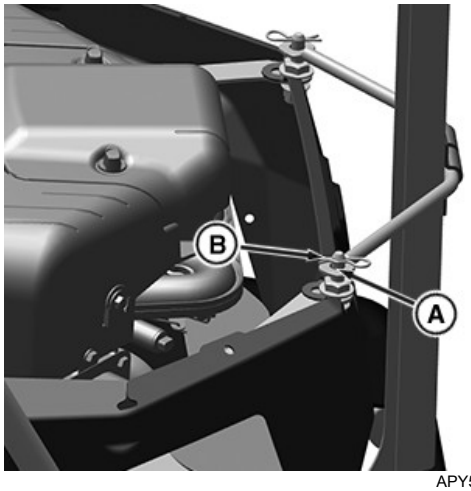

APY538273—UN—01JUN22

5. Install spring locking pin (B) through holes in the stud securing the support rod ends (A).

sb31882,1658167819874-19-19JUL22

Assemble Hopper Top Assembly to Mounting Post

IMPORTANT: Avoid damage! Allowing the hopper to contact abrasive surfaces can cause scratching.

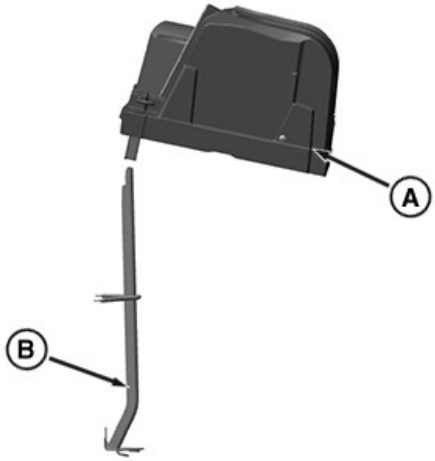

APY538264—UN—01JUN22



APY538265—UN—01JUN22

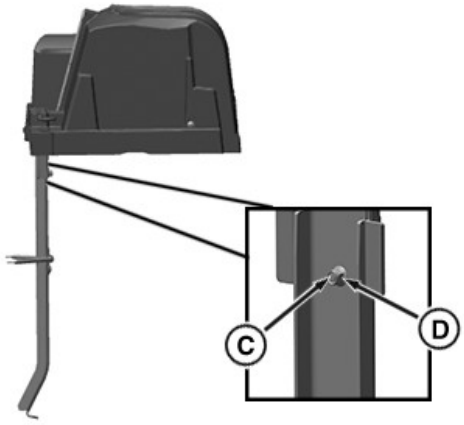

APY538266—UN—01JUN22

1. Tip the hopper top assembly 30° backward until it touches the mounting post.
2. Level the hopper top assembly (A) to slide it down onto the mounting post (B).
3. Secure it using M10 bolt (C) and nut (D).

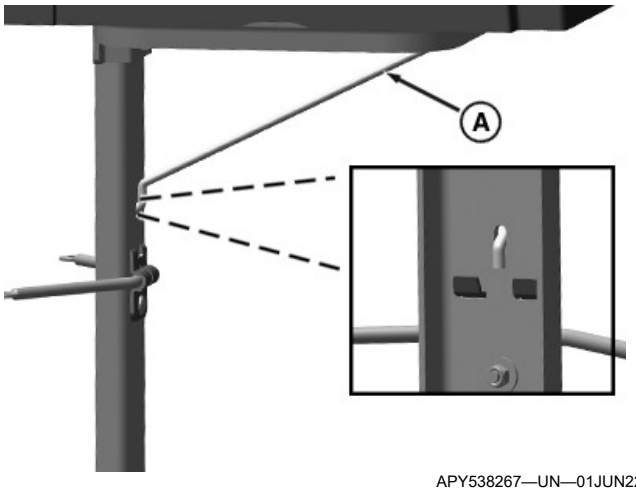

APY538267—UN—01JUN22

Front Side of the Mounting Post Wall is Shown in Right View

4. Install gusset rod (A) to mounting post slot by placing the bent portion through slot.

NOTE: Bent end is on the front side of mounting post wall.

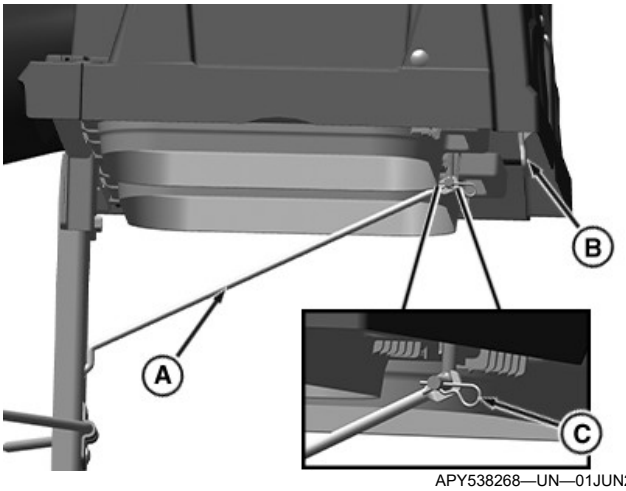

APY538268—UN—01JUN22

5. Raise the drilled end of the gusset rod (A) up to bracket on the hopper top assembly (B) and insert through the hole as shown.
6. Secure with spring locking pin (C).

vs70618,1655786637129-19-19JUL22

Installing Bags

Opening Hopper Top

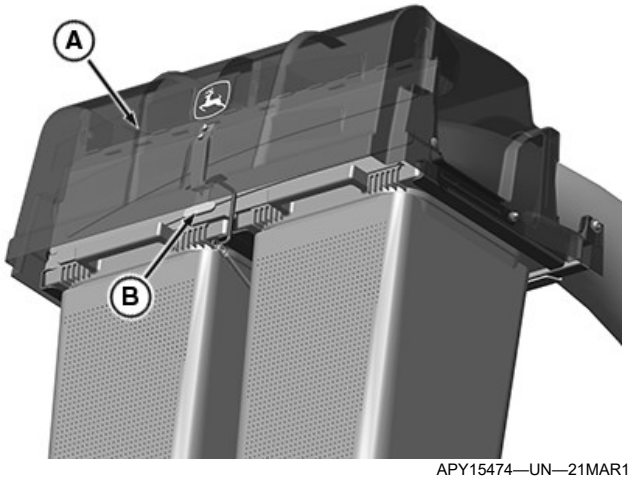

APY15474—UN—21MAR19

1. Open hopper top (A) by grasping latch (B) and pulling until it releases.

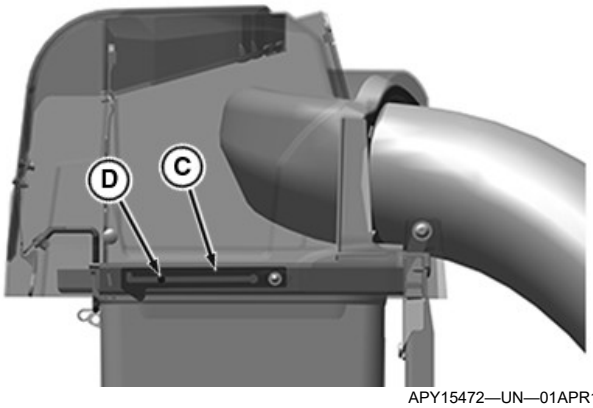

APY15472—UN—01APR19

Hopper top closed position

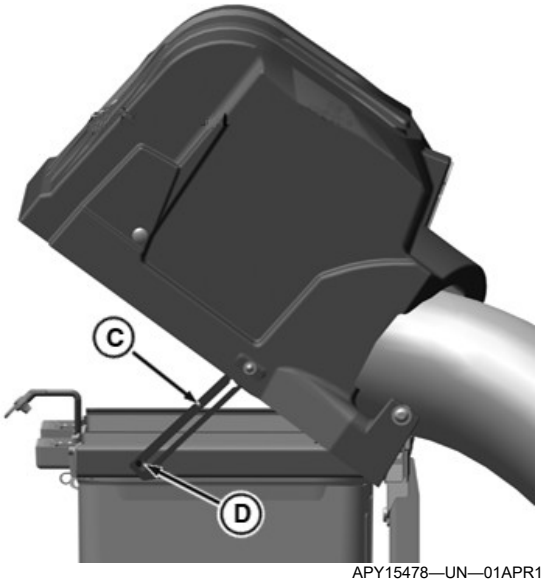

APY15478—UN—01APR19

Hopper top open position

2. As the hopper top is raised, the bracket (C) on the hopper top opens up. When it is fully open, the bracket gets locked by the pin (D).

Installing Bags

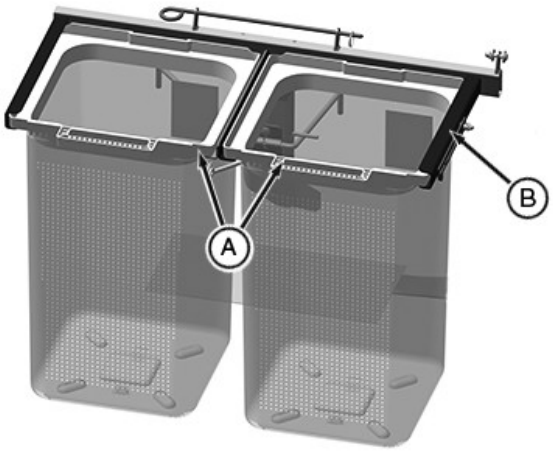

APY17732—UN—13MAR19

1. Install grass bags (A) by sliding into channels. Ensure bags slide all the way forward so front handle is inside the frame slots.

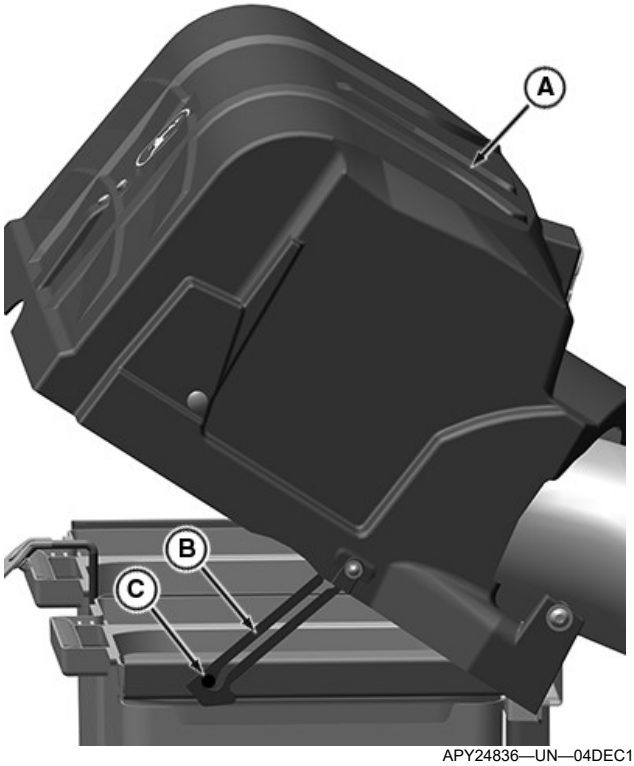

APY24836—UN—04DEC19

2. Close the hopper top (A) by releasing the bracket (B) from locking pin (C) by pulling latch backward by rounded trigger. Hold up hopper with your other hand while releasing.

SR99263,000010E-19-19JUL22

Installation With Mulch Control Kit

NOTE: The back mulch plate (between the toe guard and inner metal shield) must be removed before installing the discharge chute.

Remove three original M8 lock nuts, carriage bolts, and original toe guard.

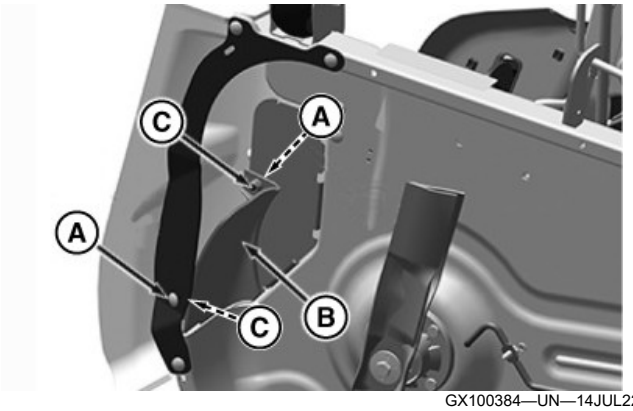

GX100384—UN—14JUL22

1. Remove two carriage bolts (A), lock nuts (C), and the discharge plate (B) (if equipped) from the toe guard and metal chute.

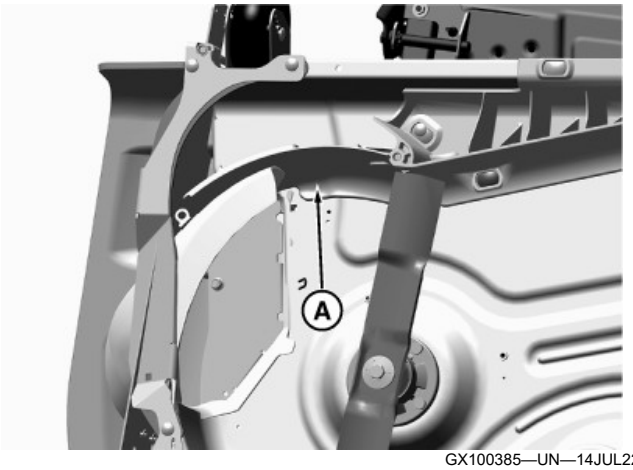

GX100385—UN—14JUL22

2. Rotate mulch control baffle (A) forward past mid-point which will allow for easier bagging chute installation.

sb31882,1657705504962-19-14JUL22

Install Baffle (without Mulch Control Kit)

CAUTION: Avoid injury! Blades are sharp. Always wear gloves when handling blades or working near blades. Replace blades if defective. Never straighten or weld them.

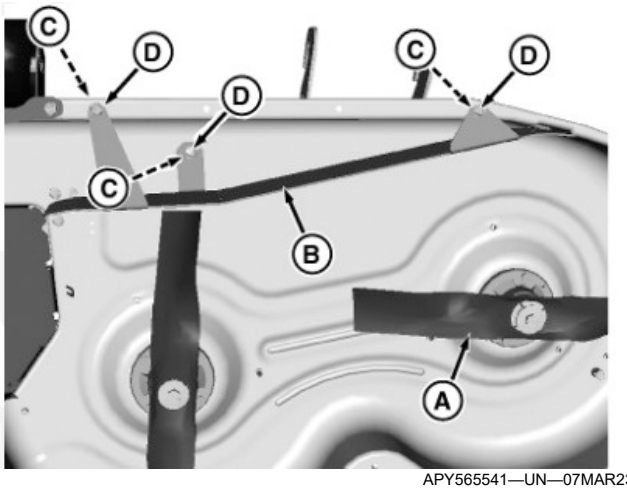

APY565541—UN—07MAR23

1. Park machine safely on a level surface (see Parking Safely in the Safety section).
2. Remove mulch or side-discharge blades (A).

NOTE: If Mulch Control kit is installed, keep the original baffle, do not install the supplied baffle.

3. Install supplied baffle (B) into deck using carriage bolts (C) and lock nuts (D).
4. Tighten lock nuts to 40 N·m (29 lb·ft).
5. Rotate blades by hand to check blade-to-baffle clearance.

hy01057,1673877817384-19-12APR23

Installing Blades

CAUTION: Avoid injury! Mower blades are sharp. Spinning blades can cause bodily injury. Before removing the standard deck blade, block the sharp edge of the blade with a piece of wood to prevent from spinning.

1. Remove mulch or side-discharge blades (if not already removed).

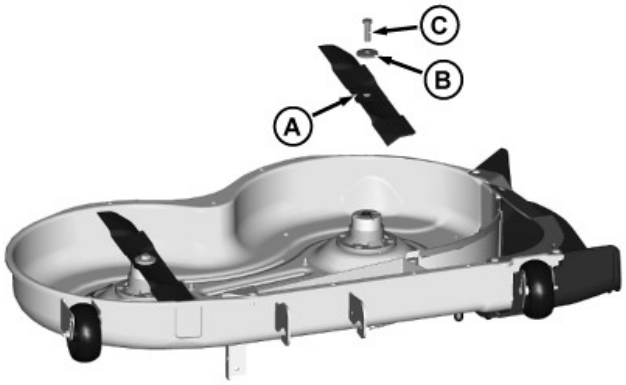

MXT015290—UN—19AUG15

2. Install supplied high-lift bagging blades (A) for best performance. Secure with washer (B) and bolt (C) . Tighten blade bolt to 68 N·m (50 lb·ft).
3. Repeat the same steps for the remaining blades.

MX00654,000033C-19-19MAY20

Installing Blower Assembly (48A and 54A Decks)

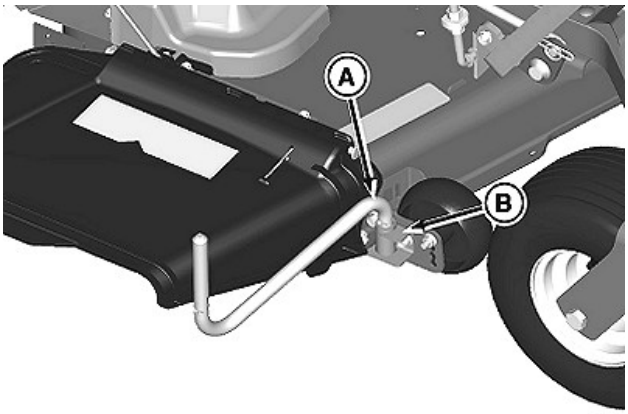

GXT002380—UN—08JUL15

1. Install short end (A) of large bent rod in front mounting bracket (B).

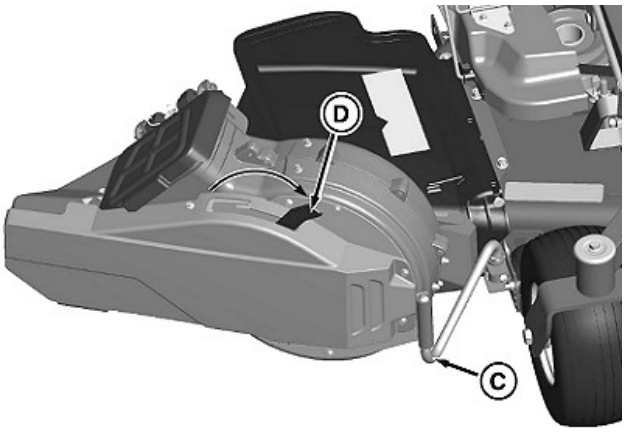

GXT002381—UN—08JUL15

2. Install the Power Flow™ blower assembly on long end (C) of bent pin.
3. Move tension lever (D) to release position.

Power Flow is a trademark of Deere & Company

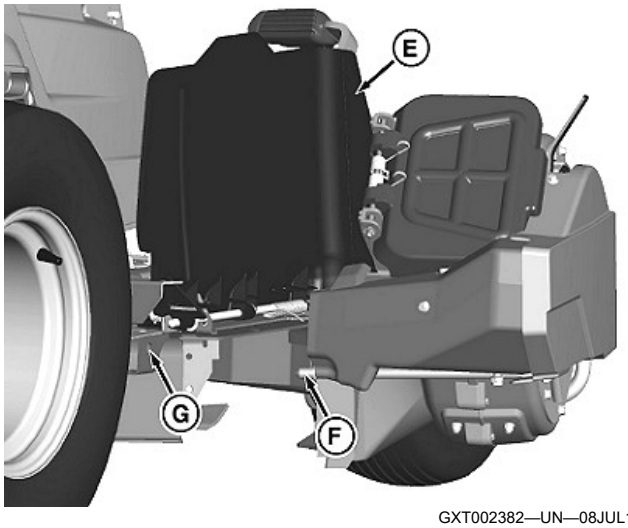

GXT002382—UN—08JUL15

4. Fully raise mower deck discharge chute (E), and pivot the blower assembly toward deck. Insert bent pin (F) into hole (G) in right rear deck bracket.

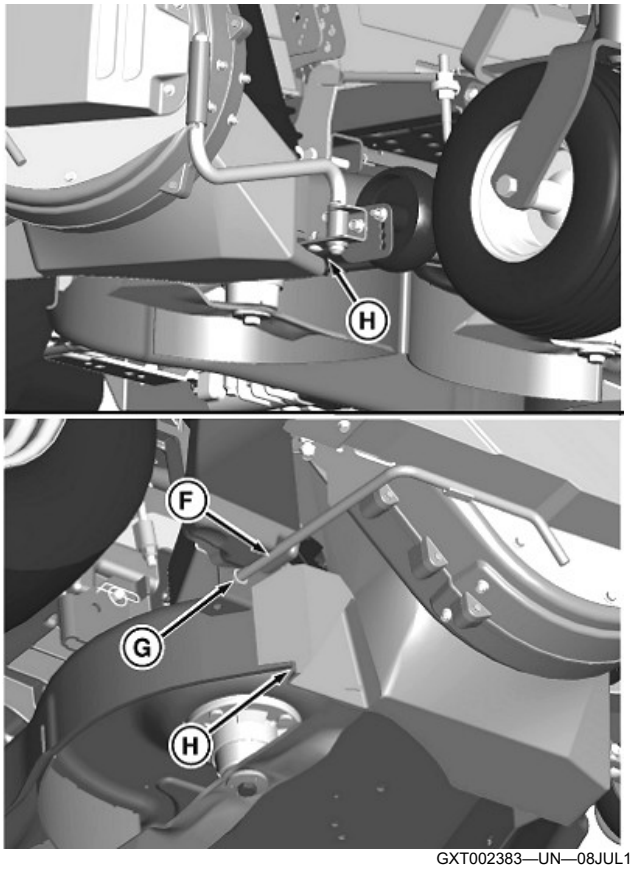

GXT002383—UN—08JUL15

Picture Note: Parts remove for clarity.

5. Position the blower assembly onto mower deck discharge (H) as shown, and insert pin (F) into hole (G).
6. Hold the blower assembly securely against mower deck discharge area.

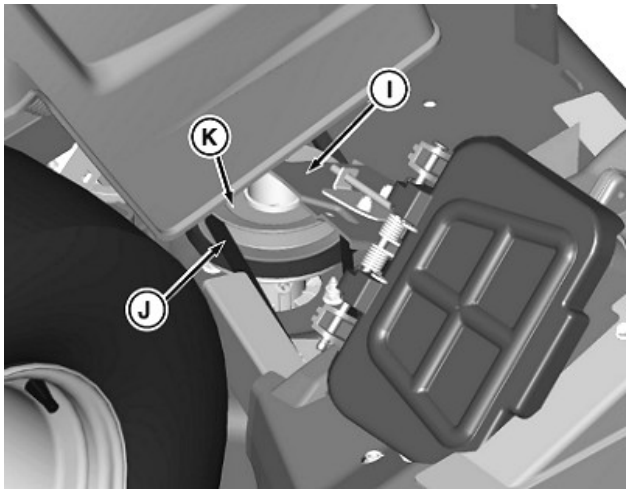

GXT002384—UN—08DEC15

7. Raise deck belt shield (I). Install drive belt (J) to top sheave (K) with V-belt in groove.

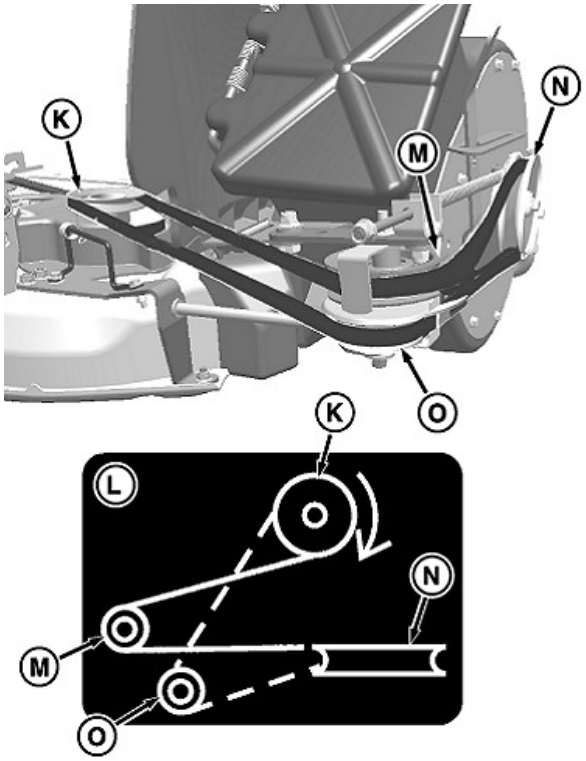

GXT002385—UN—08JUL15

Assembly may vary slightly from image shown. Belt routing is identical.

8. Locate belt installation label (L) on belt shield and verify correct drive belt installation. The drive belt must run:
   a. From mower deck top sheave (K),
   b. To idler (M),
   c. To top of sheave (N),
   d. To V-idler sheave (O),
   e. Back to mower deck top sheave (K).

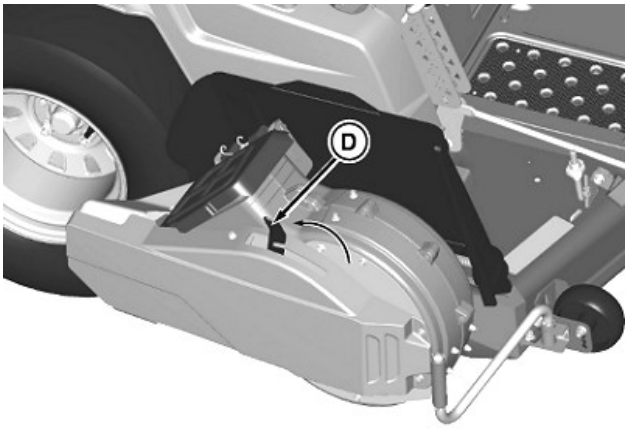

GXT002386—UN—08JUL15

9. Move tension lever (D) to the lock position.

VS70618,0001573-19-19JUL22

Installing MCS Lower Chute (42A Deck)

MCS Chute Subassembly

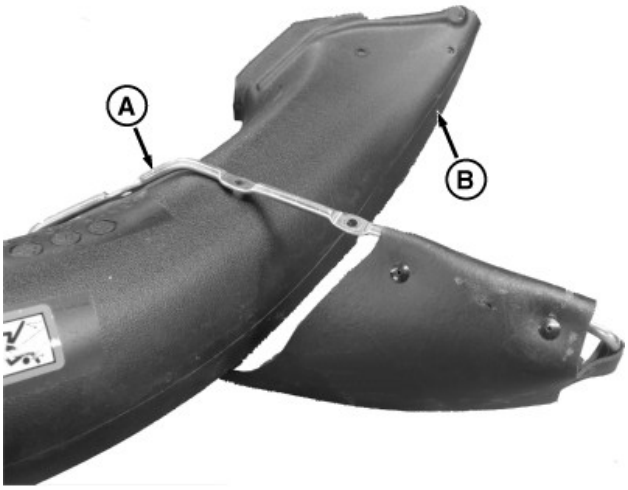

GXT002955—UN—15MAR16

1. Position wireform and flap assembly (A) over top of lower chute (B) and slide down chute with flap on outside and wireform on inside as shown.



GXT002956—UN—07MAR16

2. Align three holes and install three screws (A) from inside chute and lock nuts (B) on outside over wireform flats as shown.

Chute Installation without Mulch Control Baffle

CAUTION: Avoid injury! Prevent possible thrown objects. The discharge chute assembly must fit tight against the chute hinge bracket and completely cover the discharge opening.

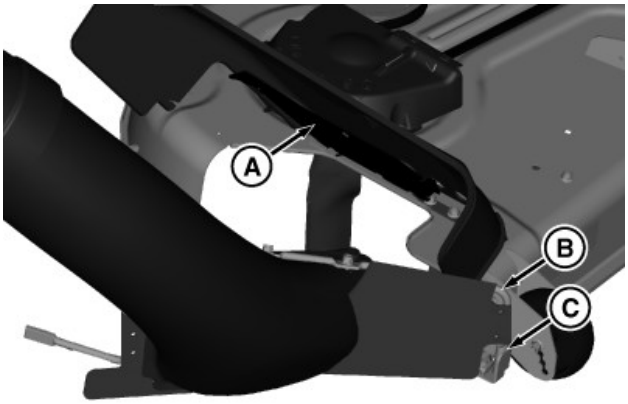

GXT002957—UN—07MAR16

1. Raise discharge chute and inner metal deflector (A). Insert lower discharge chute and wireform and flap assembly (B) into tube (C) in the toe guard.

NOTE: Once chute assembly is under mower deck discharge chute, release discharge chute.

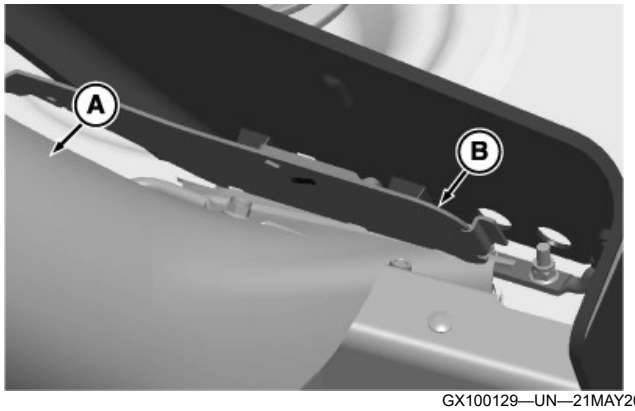

GX100129—UN—21MAY20

2. Rotate chute assembly (A) into mower deck opening. Lift chute slightly over the toe guard and under inner metal deflector (B).

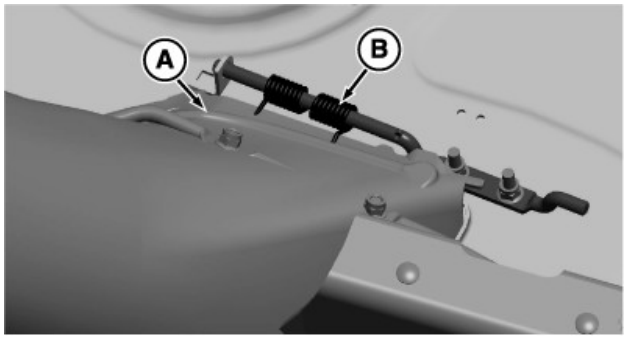

GX100130—UN—21MAY20

Discharge chute and deflector not shown for photo clarity.

NOTE: Be sure chute assembly (A) is positioned under discharge chute hinge assembly (B) and on top of deck.

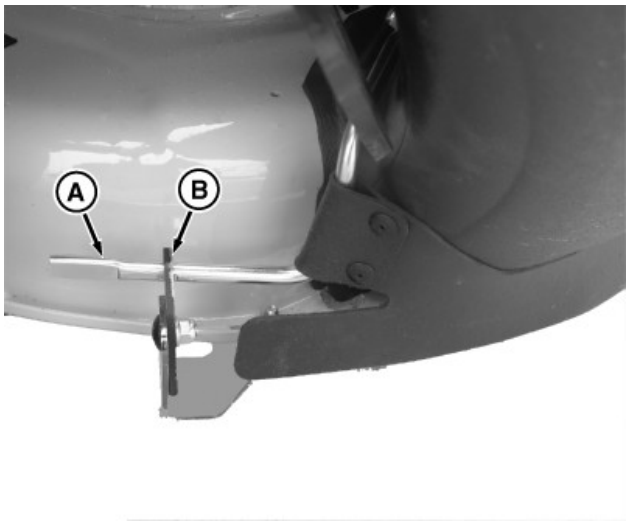

GXT002958—UN—07MAR16

3. Rotate wireform handle (A) over latch (B) at the rear of chute.
4. If the latch is tight or loose, slide latch in or outwards to adjust for desired latch or rod force. Increased force seals chute to the deck more securely, but increases installation effort.

Chute Installation with Mulch Control Baffle

NOTE: Rotate mulch control lever (A) to the open (forward) position.

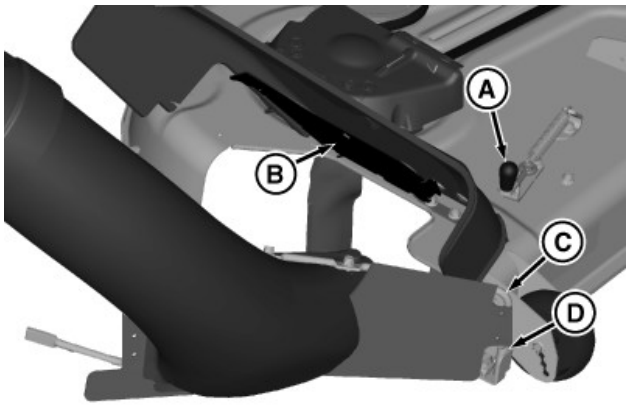

GXT002961—UN—08MAR16

1. Raise discharge chute and inner metal deflector (B). Insert lower discharge chute wireform and flap assembly (C) into tube (D) in the toe guard.

NOTE: Lower chute is behind the Mulch Control baffle, and fits tight against the baffle.

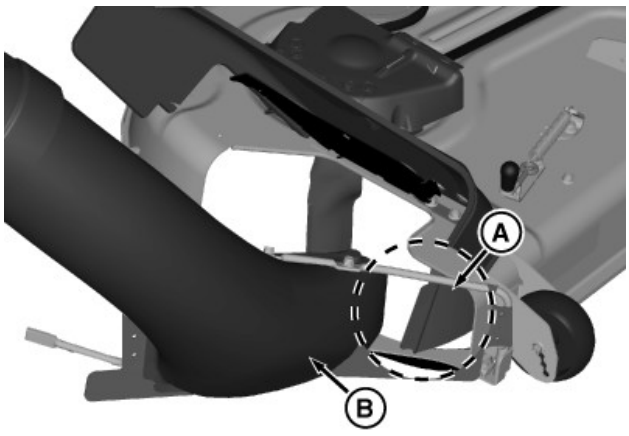

GXT002891—UN—15MAR16

2. Rotate mulch control baffle (A) back against outside of bagging chute (B).

NOTE: Once chute assembly is under mower deck discharge chute, release discharge chute.

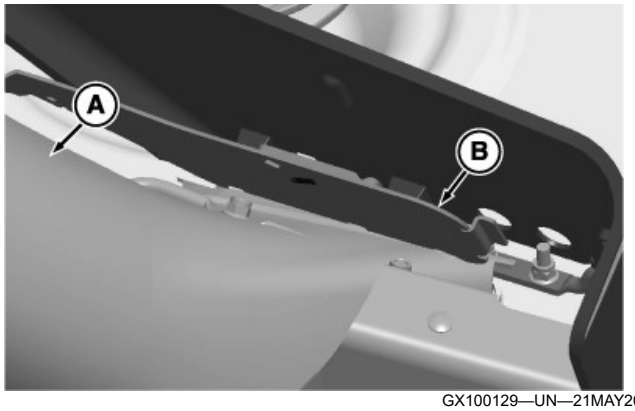

GX100129—UN—21MAY20

3. Rotate chute assembly (A) into mower deck opening. Lift chute slightly over the toe guard and under inner metal deflector (B).

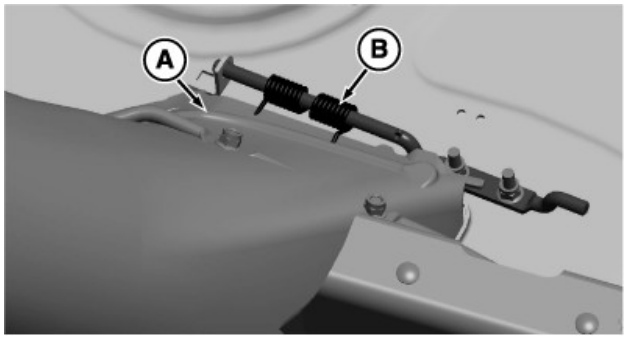

GX100130—UN—21MAY20

Discharge chute and deflector not shown for photo clarity.

Be sure chute assembly (A) is positioned under discharge chute hinge assembly (B) and on top of deck.

4. If switching back to mulching mode, reinstall rear mulch control section into MCS toe guard using same hardware. Mulch control plate section is not compatible with bagging chute as it causes clogging and fit issues.

sb31882,1657559382470-19-19JUL22

Installing Upper Discharge Chute (42A Deck)

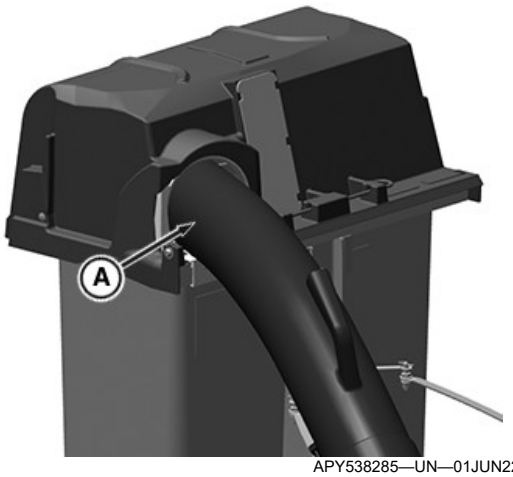

APY538285—UN—01JUN22

1. Insert the upper discharge chute (A) into the opening of hopper top.

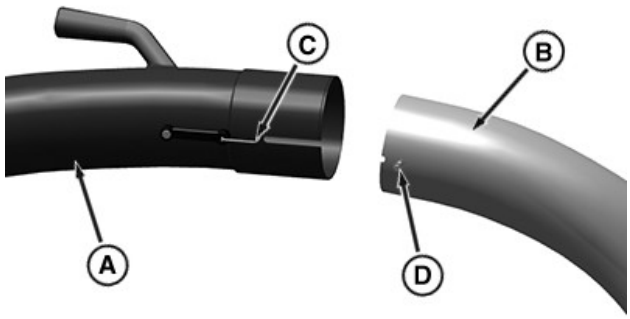

APY538283—UN—01JUN22

2. Slide bottom (A) of the upper discharge chute over top (B) of lower chute, aligning notch (C) with bolt (D).

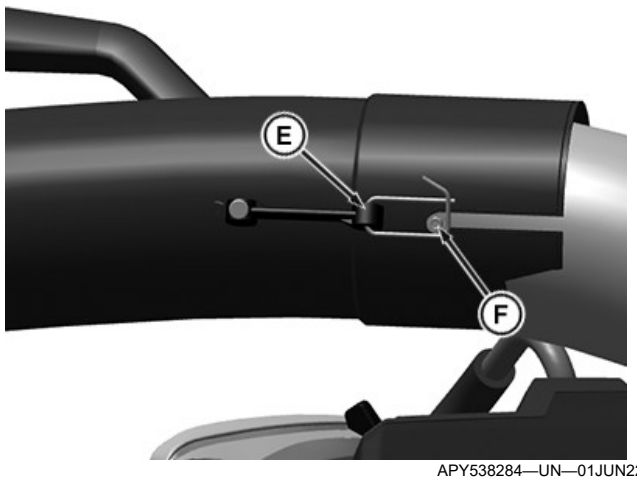

APY538284—UN—01JUN22

3. Hook rubber strap latch (E) onto bolt (F) in lower chute.

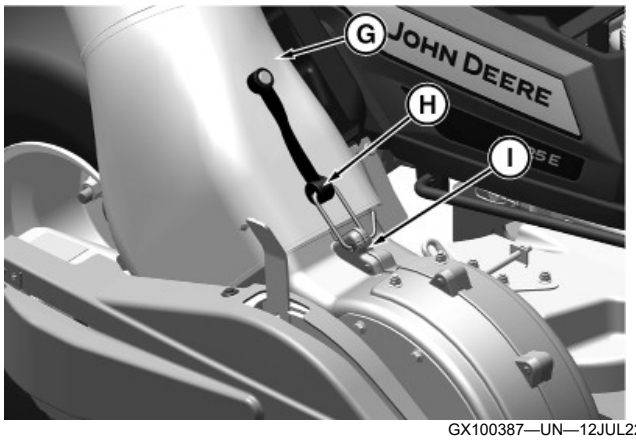

GX100387—UN—12JUL22

4. Attach the base of the lower chute (G) onto the blower assembly (I) using strap (H).

vs70618,1654063404704-19-19JUL22

Getting the Best Performance from Your MCS

Bagging Tips

IMPORTANT: Avoid damage! MCS may extend beyond machine or mower. Be careful not to hit trees or buildings, etc., with hopper when you make short turns.

Run engine at full speed. If engine slows down, reduce travel speed.

Bag grass only when grass is dry: Wet grass will plug chute and MCS.

Keep hopper top closed.

Pick up all rocks, stones, twigs and other debris before mowing and bagging. Cut grass higher than desired the first time so mower will clear unseen obstructions that could cause damage to the mower or MCS attachment.

IMPORTANT: Avoid damage! Do not leave clippings in bags:

- **Moisture may damage bags.**
- **Damp clippings are a fire hazard.**

Never leave grass or leaves in bags overnight or for long periods of time. Dampness from leaves or grass will cause deterioration of the bags. Also, damp leaves or grass when contained in the bags are combustible and can create a fire. For this reason, never store garbage bags of leaves or grass bagging attachment with full or partially filled bags in a garage or other enclosure. Grass clippings make excellent compost. Clippings can be used also as mulch between garden rows or around flowers, shrubs and trees.

Providing Airflow For MCS

MCS needs strong airflow from mower to bags for best performance. Follow these suggestions to help airflow:

- Keep chute, hopper top, screen, bags and underside of mower clean.
- Keep throttle lever at fast position but travel at slow speed.
- Level mower front-to-rear so rear of mower is no more than 13 mm (1/2 in) higher than front of mower.
- Operate mower in higher cutting positions.
- Replace worn or damaged mower blades.

Filling Bags

CAUTION: Avoid injury! Rotating blades can throw objects and debris. Stop engine before removing or installing discharge chute or grass catcher, or approved mulch plug or guard.

- When clippings are up to hopper top window, empty bags to avoid plugging chute. Left bag normally fills first.
- Right bag may not fill completely when you are cutting thin stand of grass. Bag will fill if you slow engine to reduce airflow.
- Fill bags 1/2 full when operating on slopes to avoid tipping.

MG39705,00001BD-19-12APR19

Unplugging Mower or Material Collection System

CAUTION: Avoid injury! Do not attempt to unplug attachment with machine running.

- **Rotating blades are dangerous. Shut off the engine and remove the key before getting off the seat to inspect the machine and attachment.**
- **Thrown objects can cause serious injury. Make sure all machine parts are stopped before raising hopper top or removing chutes.**

Checking For Plugging While Driving

If grass builds up in front of mower discharge chute, check for plugged chute or problems with blower assembly (if equipped).

If there is a trail of clippings behind mower or clippings blow to the side, check for plugged chute, full collector bags, or problems with blower assembly.

Removing Debris From Inspection Points:

CAUTION: Avoid injury! Do not use hands or feet to clear plugged mower deck or blower assembly. Stored energy can cause blades to rotate.

1. Park machine safely. Wait for all moving parts to stop before getting off to inspect machine.
2. Open hopper cover. Check chute outlet.
3. Remove chute from mower deck or blower assembly. Check chute inlet.
4. Check under mower deck for debris.

OUO2004,00009E8-19-20JUN14

Removing MCS Assembly (42A Deck)

Removing Upper and Lower Discharge Chute

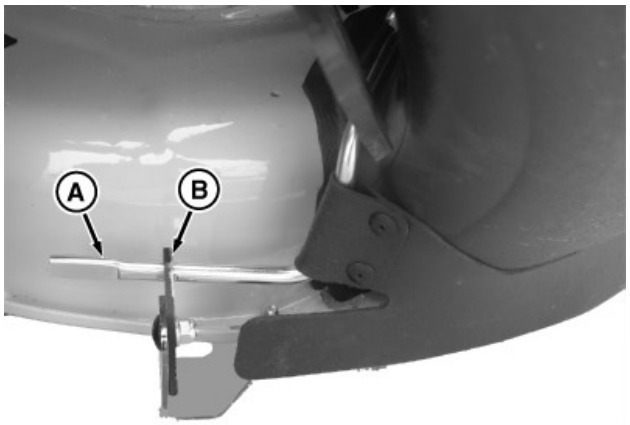

GXT002958—UN—07MAR16

1. Lift rear handle (A) over latch (B) and rotate outwards from deck.
2. Lift discharge chute deflector and remove lower chute from mower.

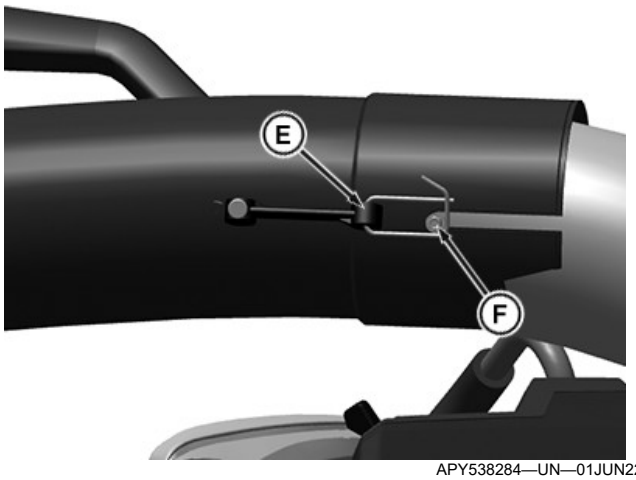

APY538284—UN—01JUN22

3. Unhook rubber strap latch (E) from bolt (F) in lower chute. Remove the lower chute from the upper chute assembly.

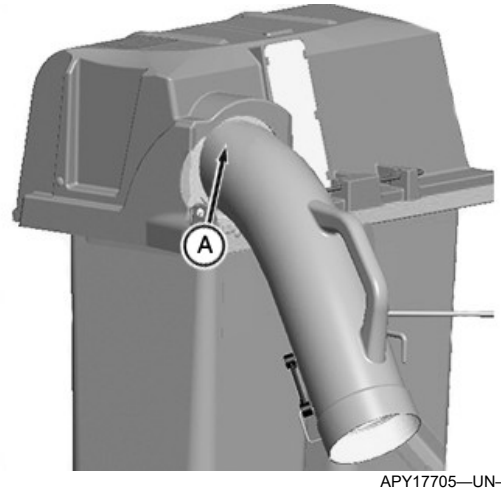

APY17705—UN—20FEB19

Remove the upper discharge chute (A) from the opening of hopper top.

Removing Bags

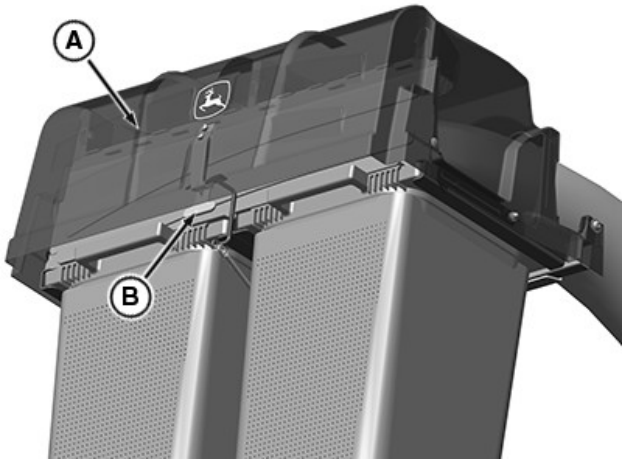

APY15474—UN—21MAR19

1. Open hopper top (A) by grasping latch (B) and pulling until it releases.

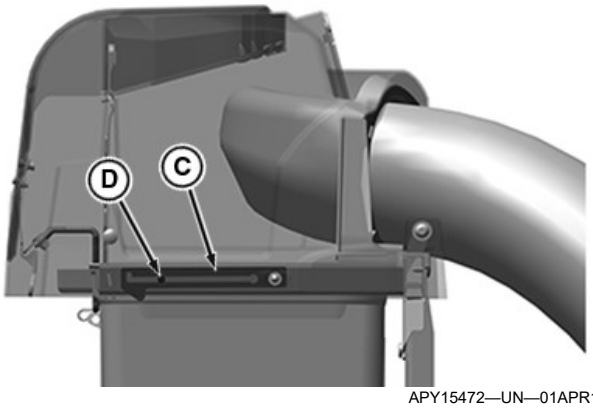

APY15472—UN—01APR19

Hopper top shown in closed position.

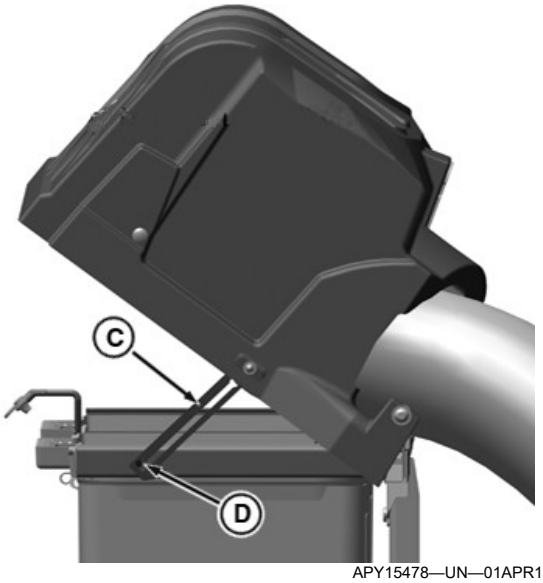

APY15478—UN—01APR19

Hopper top shown in open position.

2. As the hopper top is raised, the bracket (C) on the hopper top opens up. When it is fully open, the bracket gets locked by the pin (D).

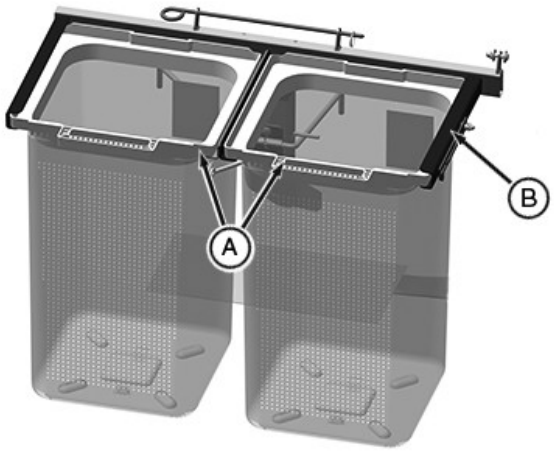

APY17732—UN—13MAR19

3. Remove grass bags (A) by sliding out of tabs (B).

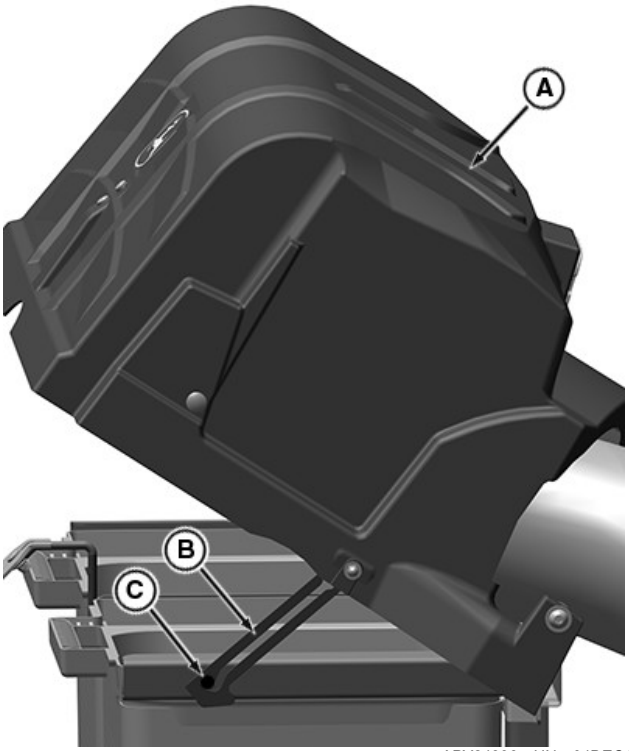

APY24836—UN—04DEC19

4. Close the hopper top (A) by releasing the bracket (B) from locking pin (C) by pulling latch backward by rounded trigger. Hold hopper up with other hand while releasing.

Removing Support Rod and Hopper Top Assembly

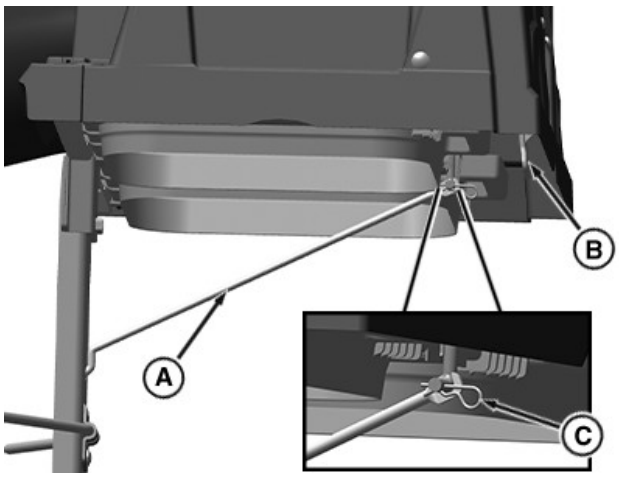

APY538268—UN—01JUN22

1. Release the spring locking pin (C).
2. Raise hopper top (B) slightly and then remove the gusset rod (A) from hopper top assembly.
3. Lower the gusset rod (A) and remove it from mounting post.

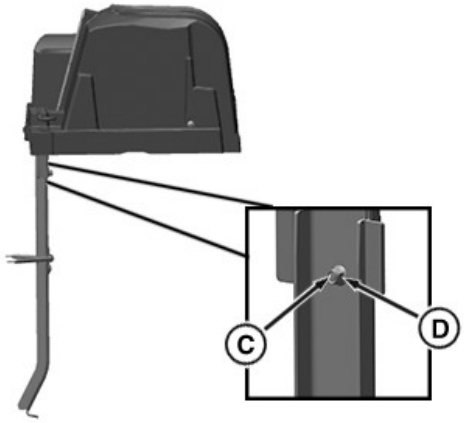

APY538266—UN—01JUN22



APY538265—UN—01JUN22

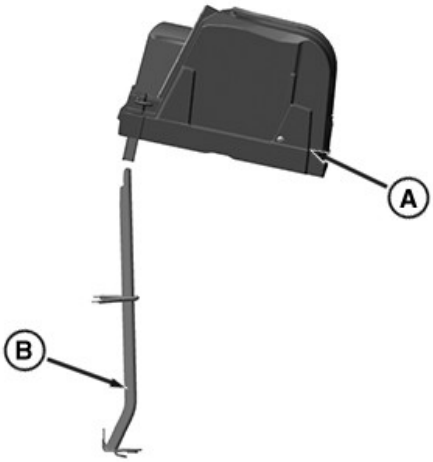

APY538264—UN—01JUN22

4. Remove spring locking pin (D) and pin (C).
5. Slide the hopper top assembly (A) upward from the mounting post (B) and carefully remove it.

Removing Mounting Post

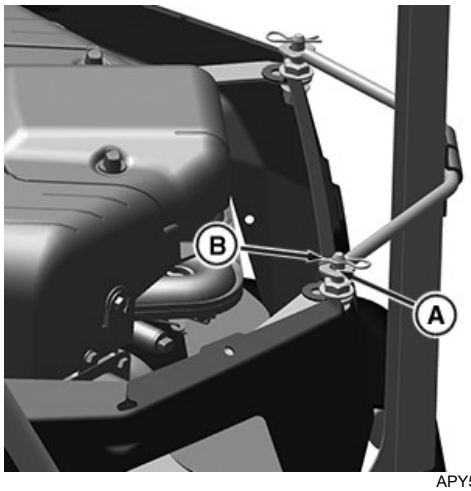

APY538273—UN—01JUN22

1. Remove spring locking pin (B) from each end of the support rod. Slide support rod ends (A) off the cargo pins.

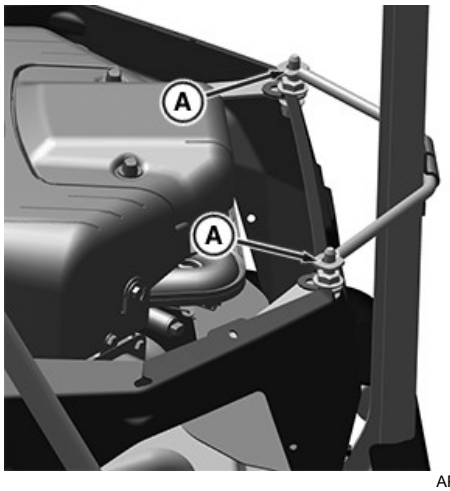

APY538272—UN—01JUN22

2. Raise mounting post upward toward the machine

and remove support rod ends (A) from the small holes in CargO Mount™ brackets at the rear of the machine.

3. Remove the mounting post.

vs70618,1654527097809-19-19JUL22

Storing Attachment

CAUTION: Avoid injury! Fuel vapors are explosive and flammable. Engine exhaust fumes contain carbon monoxide and can cause serious illness or death:

- **Run the engine only long enough to move the machine to or from storage.**
- **Machine fires and structure fires can occur if a machine is stored before allowing it to cool, or if debris is not removed from around the engine and muffler, or if stored near combustible materials.**
- **Do not store vehicle with fuel in the tank inside a building where fumes may reach an open flame or spark.**
- **Allow the engine to cool before storing the machine in any enclosure.**

NOTE: Some of the following steps may not apply to your attachment.

1. Remove attachment from machine.
2. Clean attachment and driveline, if equipped.
3. Remove any shields if needed to clean out all debris.
4. Repair or replace worn, bent, or damaged parts. Tighten loose hardware.
5. Apply paint to painted surfaces where needed to prevent rust.
6. Apply thin coat of grease to blades to prevent rust.
7. Lubricate any pivot points with engine oil to prevent rust.
8. Lubricate any grease points.

IMPORTANT: Avoid damage! Abrasive surfaces can damage attachment. Store attachment on non-abrasive surface or on wooden blocks.

9. If storing attachment outdoors, block up attachment if possible and place a waterproof cover over it.

JK79365,0000188-19-29JUL15

Removing Power Flow™

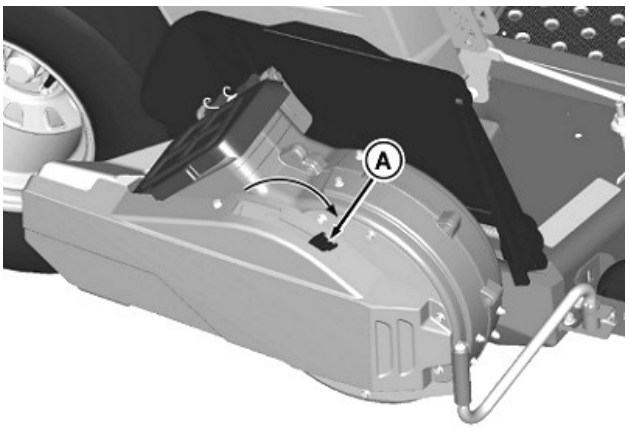

GXT002387—UN—08JUL15

1. Move tension lever (A) to the release position.

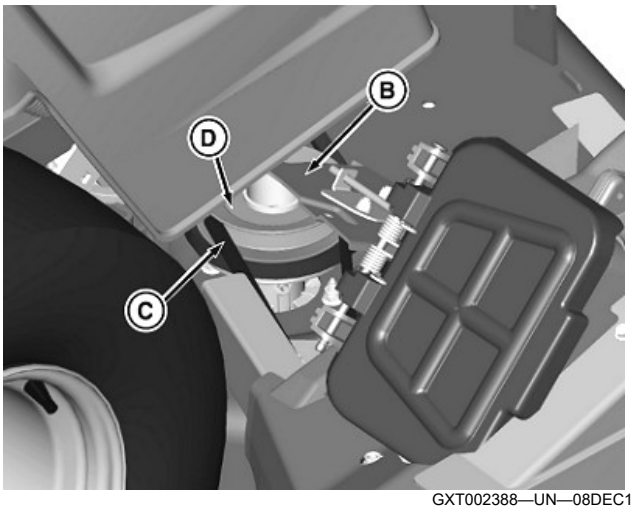

GXT002388—UN—08DEC15

2. Raise deck belt shield (B) and remove drive belt (C) from top sheave (D).

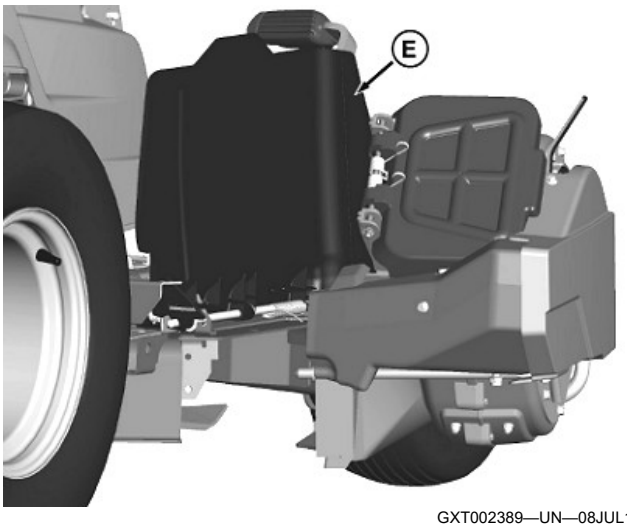

GXT002389—UN—08JUL15

Power Flow is a trademark of Deere & Company

3. Raise mower deck discharge chute (E) and pivot the blower assembly away from deck.

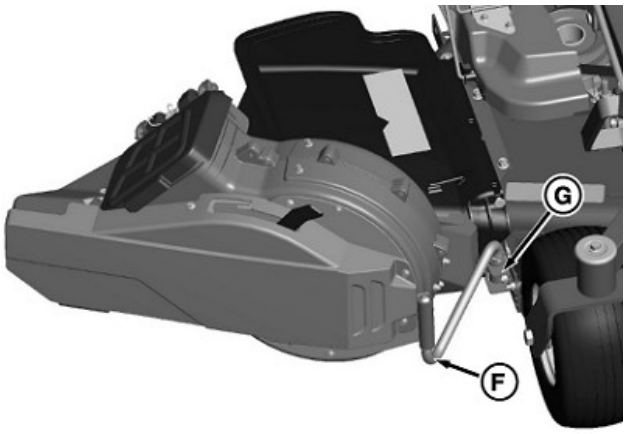

GXT002390—UN—08JUL15

4. Remove the blower assembly from long end of bent pin (F).
5. Remove short end of bent pin from front mounting bracket (G).

VS70618,0001570-19-19JUL22

Storing Power Flow™

1. Remove the blower assembly from mower deck.

IMPORTANT: Avoid damage! Grass buildup, if allowed to dry out, may break off into small, hard pieces and be propelled inside blower assembly. Premature failure may result.

2. Clean exterior and interior of the blower assembly.

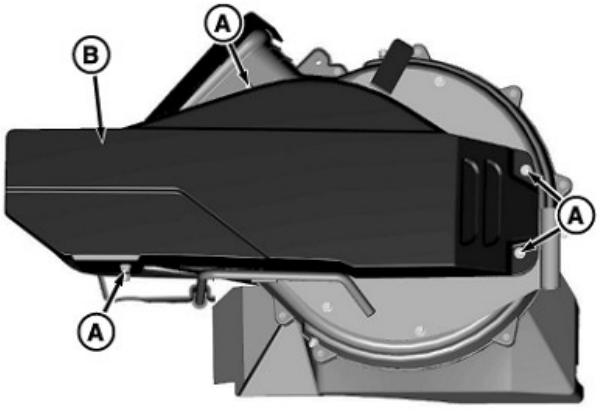

GXT002391—UN—08JUL15

3. Remove four bolts (A) attaching belt shield (B) to blower assembly.
4. Remove belt shield.
5. Remove all grass accumulation around belt, idler and sheaves.
6. Remove and inspect drive belt. Replace belt if needed.
7. Store the blower assembly in a clean, dry area. It is best to enclose it in its original shipping carton.

VS70618,0001571-19-19JUL22

Replacing Drive Belt

1. Remove Power Flow™ blower assembly from mower deck.

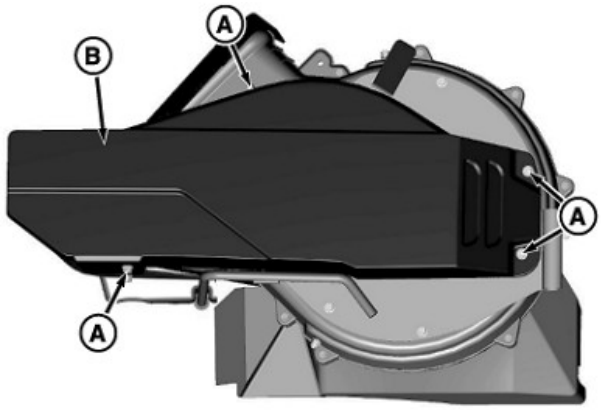

GXT002391—UN—08JUL15

2. Remove four bolts (A) attaching belt shield (B) to the blower assembly.
3. Remove belt shield.
4. Remove all grass accumulation around belt, idler, and sheaves.

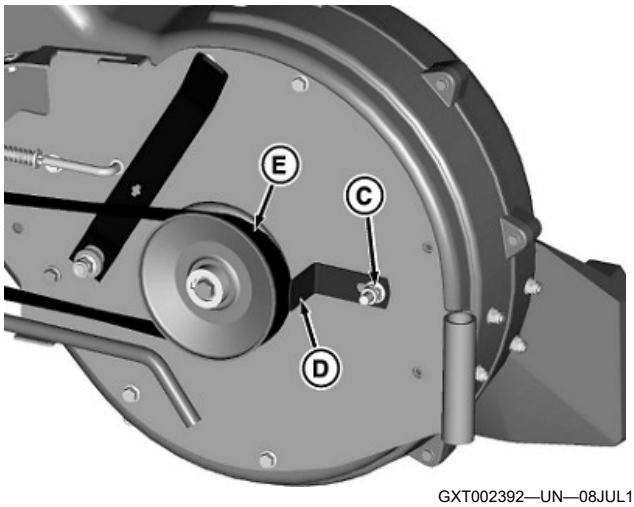

GXT002392—UN—08JUL15

5. Loosen nut (C) and slide belt guide (D) over to remove belt (E).

Power Flow is a trademark of Deere & Company

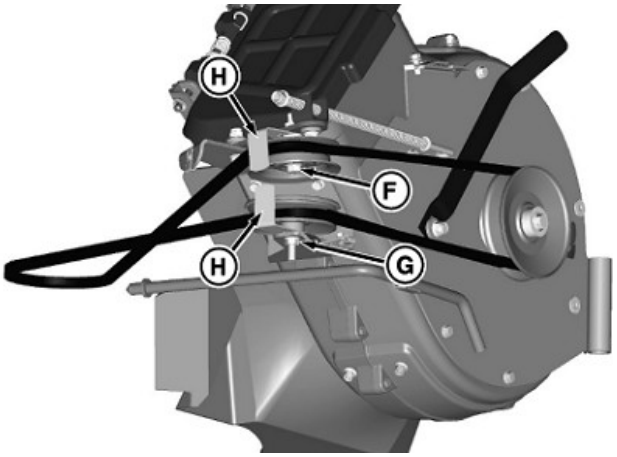

GXT002393—UN—08JUL15

6. Loosen nut on bolt (F) on idler and nut (G) on sheave.
7. Move belt brackets (H) away from idler and sheave, and remove belt.

VS70618,0001572-19-19JUL22

Using Troubleshoot Chart

If you are experiencing a problem that is not listed in this chart, see your Technical Manual, dealer, or other service provider for service.

MP47322,00F467B-19-17OCT25

MCS Troubleshooting

IF	CHECK
Grass not being picked up completely.	• Mow grass only when dry. • Reduce mower ground speed. • Empty bags. • Clean screen in the hopper top. • Unplug chute. • Check cutting edge of mower blades. • Increase engine speed to full throttle. • Check for worn or slipping belt.
Collection chute plugged.	• Mow grass only when dry. • Empty bags. • Clean screen in the hopper top. • Reduce mower ground speed. • Stop mower when bags are full; monitor bags/hopper more frequently.

MG39705,00001BB-19-21MAR19

John Deere Quality Statement

John Deere Quality

John Deere equipment is more than just a purchase, it's an investment in quality. That quality goes beyond our equipment to your John Deere dealer's parts and service support. This support is needed to keep you a satisfied customer.

That's why John Deere has initiated a process to handle your questions or problems, should they arise. The following three steps will help guide you through the process.

Step 1

Refer to your operator's manual

A. It has many illustrations and detailed information on the safe and proper operation of your equipment.

B. It gives troubleshooting procedures, and specification information.

C. It gives ordering information for parts catalogs, service and technical manuals.

D. If your questions are not answered in the operator's manual, then go to Step 2.

Step 2

Contact your dealer

A. Your John Deere dealer has the responsibility, authority, and ability to answer questions, resolve problems, and fulfill your parts and service needs.

B. First, discuss your questions or problems with your dealer's trained parts and service staff.

C. If the parts and service people are unable to resolve your problem, see the dealership manager or owner.

D. If your questions or problems are not resolved by the dealer, then go to Step 3.

Step 3

Contact John Deere

A. Your John Deere dealer is the most efficient source in addressing any concern, but if you are not able to resolve your problem after checking your operator's manual and contacting your dealer, contact John Deere for assistance.

B. For prompt, effective service, please have the following ready before you call:

- The name of the dealer with whom you've been working.
- Your equipment model number.
- Number of hours on machine (if applicable).
- Your serial number which you recorded on the inside front cover of this manual.
- If the problem is with an attachment, your attachment identification number.

C. Then call 1-800-537-8233 (United States and Canada) and our advisor will work with your dealer to investigate your concern. If you are outside the United States and Canada, visit the following website:

https://www.deere.com/en/global-country-selector/

Select your country and then click on the Contact Us link at the bottom of the page.

SP66632,00043A7-19-04AUG25

Index

A

Assemble Bagger Support Rod to Cargo Mount
  Bagger support rod to cargo mount bracket
    Cargo mount bracket to support rod 30-3
Assembly
  Discharge Chute, Modify 25-5
  Double sheave, install (48A and 54A Decks) . 25-5
  Front mounting bracket, install 25-6
  Rear baffle plate, install 25-6

B

Bagger airflow 40-1
Bagger, Installing 30-5
Bagging tips 40-1
Ballast, machine 20-1

D

Drive Belt
  Removal 45-5

F

Filing bags 40-1

I

Installing Baffle (Without Mulch Control Kit) 30-6
Installing Blades
  Blades, Installing 30-7
Installing Lower Discharge Chute
  Lower Discharge Chute, Installing 30-9

J

John Deere Quality 60-1

L

Labels, safety with text 05-2
Labels, safety without text 06-1

O

Order Service Parts Online 3

P

Parts 3
Plugging while driving, checking 40-1
Purchase Information, Record 00-1

R

Remove debris
  Debris removal 40-1

S

Safety label locations 05-1, 06-1
Safety labels, with text 05-2
Safety labels, without text 06-1
Service Literature 3
Snowblower compatibility 00-1
Special Messages 2
Storing attachment 45-4

T

Thank You for Purchasing a John Deere Product ... 2
Troubleshooting 50-1
Troubleshooting chart 50-1

U

Upper bagger discharge chute, installing
  Installing upper bagger discharge chute 30-11