ASSEMBLY INSTRUCTIONS

DAYBED WITH CUSHION
IT-460071

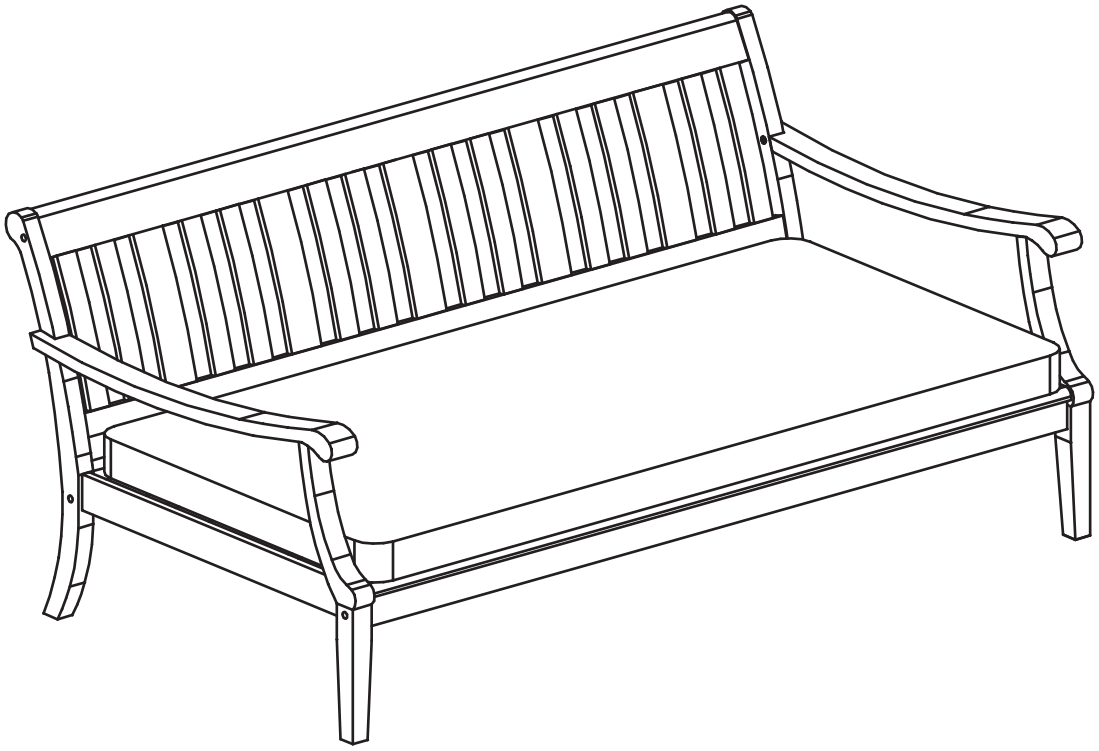

Scan me for assembly video

A gift is waiting for you!

Customer Service Information

Please email us at info@cambridge-casual.com for assembly tips, report damage, or request parts.
For faster response, please write down item number, code for missing parts,
attach the purchase receipt and picture of damaged parts.

GENERAL INFORMATION & TIPS

1. Please read the assembly instructions prior to assembling the bench.
2. To avoid damage, assemble the bench on a non-abrasive surface such as carpet.
3. Make sure all bolts tightly fastened before the bench is used.
4. This bench is not for commercial use.

Please make sure you have all parts before beginning assembly. Please wait until all steps are completed before tightening bolts.

TOOLS REQUIRED

1. 8" Philips screwdriver (Not provided).
   - For tightening all bolts.

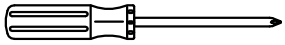

2. Rubber Mallet (Not provided).
   - For tapping in the wooden caps.

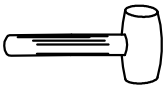

PARTS AND HARDWARE LIST

A1. Right side frame	A2. Left side frame	B. Back support	C. Seat
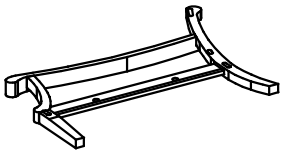	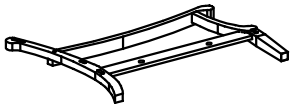	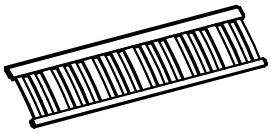	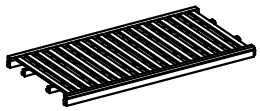
QTY: 1 pc	QTY: 1 pc	QTY: 1 pc	QTY: 1 pc
D. 1 1/4" Bolt	E. 1 1/2" Bolt	F. Wooden cap	
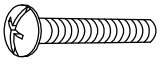	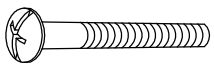		
QTY: 4 pcs + 1	QTY: 2 pcs +1	QTY: 6 pcs + 1	

STEP 1

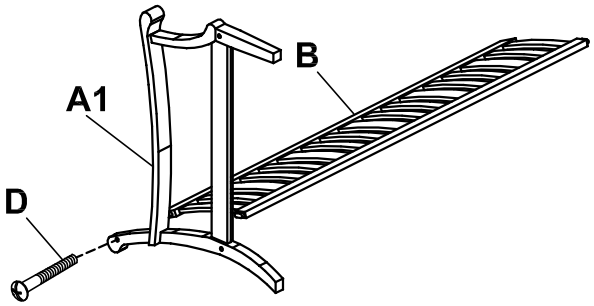

- Attach back (B) into corresponding of right leg (A1).
- Secure with 1 1/4" bolt (D) using phillips screwdriver, not provided.

STEP 2

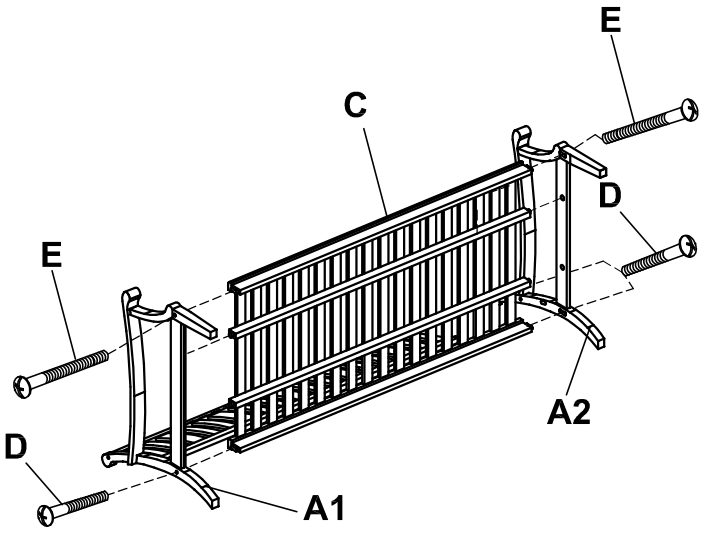

- Attach seat tenons (C) into matching holes of right leg (A1) and then attach left leg (A2) to pre- assembled.
- Secure front seat with 1 1/2" bolts (E) and back seat with 1 1/4" bolts (D).

STEP 3

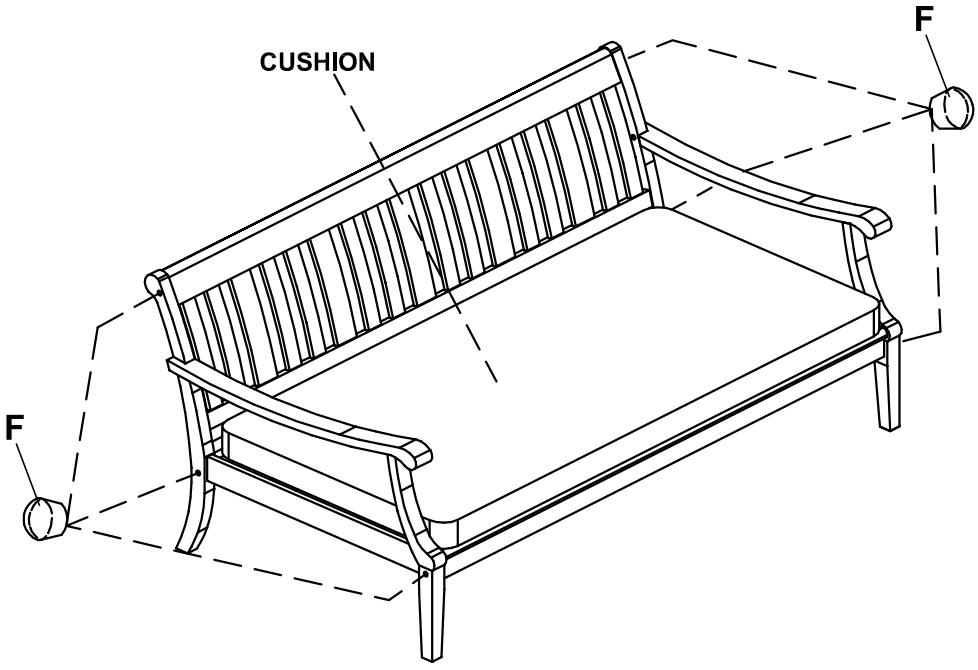

- Turn the chair upright, side up.
- Make sure all parts are connected and tighten all bolts completely using screwdriver.
- Tap in wooden caps (F) to cover bolt heads using rubber mallet.
- Install the cushions as shown.

THE BENCH NOW READY FOR USE.

CARE MAINTENANCE

Our collections are meticulously crafted by artisans using sustainably harvested wood, cultivated under rigorous governmental regulations. This approach not only promotes the sustainability of future wood harvests but also guarantees adherence to legal trade practices.

Our collections are designed to withstand the elements. However, as even the best-made furniture is not indestructible, normal wear and tear will reflect use and care. To keep your pieces looking their best, please follow this helpful guide of cleaning and maintenance recommendations.

GENERAL OUTDOOR CARE

- Regular cleaning is important to keep your pieces looking their best.
- We strongly recommend using furniture covers or moving into covered storage when items are not in use during heavy rain, winter, and other periods of inclement weather.
- Furniture, and cushions should be clean and dry before covering or storing.
- Wet cushions should be removed from the frame and air dried to prevent mold and mildew.
- Do not store furniture in areas that have central heating or cooling vents to prevent excessive drying of the wood. This will decrease the furniture's longevity.
- Avoid letting liquids stand on the surface of furniture and cushions.
- Do not put hot items directly on furniture surface.
- Do not write on furniture without a padded barrier to protect the surface.
- Do not leave your furniture in puddles of water or on wet ground.

UNFINISH NATURAL / FINELY SANDED TEAK

Characteristic

- Each piece may exhibit unique graining and color variations due to the organic nature of the teak.
- The inherent characteristics of natural teak, such as small splits, knots, joint lines, and other features, contribute to the character of the piece without affecting its quality or performance.
- Natural teak will gracefully develop a silver-gray patina as it weathers. Teak sealer or teak oil may be applied, if you prefer to maintain the original warm honey brown.
- Teak expands and contracts in response to shifts in climate. This natural phenomenon may lead to hairline cracks in assembly joints or the wood grain itself. This does not compromise the structural integrity of the frame's construction.
- Despite its innate resistance to decay, surface mildew may form. It's important to note that such mildew does not impact the wood's durability or lifespan and can be removed through simple cleaning.

Care & Maintenance

You can clean your teak furniture using warm water and mild dish soap. Gently scrub teak surfaces in the same direction as their grain. Rinse thoroughly with water. Pat dry with a towel and allow any remaining moisture to air-dry.

You may also use a mixture of a cup of chlorine bleach, a cup of laundry detergent and a gallon of water to clean your teak pieces. Apply using a non-metallic, soft-bristle brush. Allow to sit on the furniture for approximately 5-10 minutes, or longer for more stubborn stains. Thoroughly rinse the cleaning solution with clean water (spray it with a garden hose).

Always begin with a mild - or more diluted - cleaning solution. If that does not work, try a stronger concentration or a store-bought teak cleaner.

To remove remaining stains, lightly sand the affected areas with fine 120-grit sandpaper until the stain disappears.

WEATHERED TEAK

Our weathered teak finish is hand applied to our teak frames using a wire brush to distress the wood before applying a multilayered painted finish to create a weathered appearance for our teak furniture.

Similar to all painted finishes, our weathered teak finish will fade and wear when exposed to outdoor elements. As the finish gradually wears away, the underlying natural teak wood will become exposed and start to turn grey. The speed at which this weathering occurs can differ based on factors such as climate, exposure level, and commitment to care and maintenance. This weathering process is accelerated when furniture is left untreated or uncovered. To preserve your weathered teak furniture, particularly during extreme weather or winter seasons, it's recommended to either move it to covered storage or cover it with a furniture cover.

SPA COLLECTION TEAK

Water and stain guard is applied to our bath collection teak. This finished teak may be maintained with solvent-based polyurethane protective coating every six (6) months, or as suggested by the protective coating manufacturers.

For everyday maintenance, you may clean with mild detergent using clean cloth. Please do not expose and/or use any chemical solvent.

PAINTED HARDWOOD

We recommend applying water-based mild detergent for wood using clean cloth every six (6) months. Please do not expose and/or use any chemical solvent.

Color / finish can fade over time when continuously exposed to elements like sunlight and rain. Store indoors or use a furniture cover during extreme weather or winter months to protect your furniture.

CUSHIONS

Our fabrics are designed to be breathable. They are water resistant but not waterproof. It is recommended that you remove them from furniture and store them in a dry place when not in use or during inclement weather. The cushion and cushion cover shall be removed and air dried if it is soaked after heavy rain to avoid the potential mold issue. When drying, flip cushions on their sides with the zipper facing down and unzipped cushion covers to ensure that all water drains out.

The best way to keep your fabrics looking good is to clean them. It is recommended to clean off dust and dirt periodically, wipe spills as soon as they occur, and spot clean soon after stains occur. Removable cushion covers may be machine-washed in cold water with mild laundry soap and air dried.

Cushions and pillows may show signs of wear and lose shape after use. To help prevent this, periodically rotate cushions and pillows insert to distribute wear.

SYNTHETIC RATTAN, WOVEN POLYROPE, & TEXTILENE

Synthetic rattan, woven polyrope, and textilene should be dusted periodically with a soft, dry cloth to remove dirt and debris. Loose dirt can also be removed using a non-metallic, soft bristle brush. For spot-cleaning, you can spray off debris using a hose and then dry the surface with a soft cloth.

For a more thorough cleaning, prepare a mixture of mild soap with water and clean using a non-metallic, soft-bristle brush. Do not use abrasive cleaners. Rinse thoroughly and dry with a soft cloth

We believe that this care maintenance will be a rewarding experience, as well-maintained furniture may last many years to come.

1 Year Limited Warranty

This warranty is a limited warranty. Regular care and maintenance are required to maintain the warranty. Warranty is to the original purchaser when items are purchased from one of our authorized retailers and is not transferable. If a product fails and is under the terms of our limited warranty, the item will be replaced with a small fee when applicable. In the case of discontinued models, an item of similar quality and style will be offered to the customer.

- 1 Year Limited Frame Warranty:
  Wood frames are warranted to be free from structural defects (i.e., broken frame) in material and workmanship. Wood frames require user maintenance and changes in the color of wood are normal and should be expected to occur over time as the natural material ages. Therefore, natural fading and changes in wood frames is not covered by this warranty. Components such as chair feet are meant to wear and tear, so they will not be considered as part of the frame.
- Finish, when applicable:
  The finish is warranted against peeling, cracking, or blistering for a period of 1 year, provided the unit has not been scratched or abraded. Scratches and dents resulting from normal wear and tear are not covered.
- Fabric
  Fabrics and cushions are warranted to be free from workmanship or material defects, which includes failures in stitching, zippers, sling rails, cording, buttons, cushion foam, or other areas of workmanship. The fabric and cushion will not be warranted if deterioration, discoloration, fading, etc., is due to exposure of chemicals, cleaning products, sun lotions, oil spills, improper maintenance process, or extreme heat.

Warranty Exclusions:

Furniture used for commercial, contractor or any non-residential purposes | clearance items, display models, or items purchased "as is" | failure caused by unreasonable or abusive use, freight damage, acts of nature, vandalism, fire, lack of proper care and maintenance, or improper assembly | exposure to severe weather includes, but not limited to, snowstorm, hail, heavy rainfall, flooding, hurricane, and extreme heat | accidental damage, repair, or modifications by customer | straps and fabric against fading or discoloration from improper and/or accidental exposure to elements, oil spills, fluids or chemicals | hardware against corrosion or rusting | buckling or splitting of tubing resulting from exposure to water and freezing temperatures.

Further excluded: normal wear and tear | loss of use or time | inconvenience, money, travel, packaging or any other consequential or incidental damages.

In no event shall the manufacturer's responsibility exceed the value of the product.

The warranty starts on the date of purchasing unless otherwise noted. However, we may consider for special circumstance.

For quality control purposes and verification, we need documents in support of your claim:

- Packing slip / Invoice
- Additional documents (Photos or video) of damaged/ defected/ missing part
- Item number and part code (can be found on assembly instruction)

Please include the above-mentioned documents as your claim **WILL NOT BE PROCESSED** until properly supported. **Retain all damaged goods until the claim is concluded**.

The terms of this warranty are subject to change without notice.