Kumin® | K-98827-4

Single-handle bathroom sink faucet

Features

- Single lever handle allows for both on/off activation and temperature setting
- KOHLER® ceramic disc valves exceed industry longevity standards for a lifetime of durable performance
- Leak-free ceramic disc valve allows both volume and temperature control
- Includes metal pop-up drain with 1-1/4" metal tailpiece
- 1.2 gpm (4.5 lpm) maximum flow rate at 60 psi (4.14 bar)
- Red/blue indexing on handle



Sustainability

DISCONTINUED

1-800-4KOHLER (1-800-456-4537)
Kohler Co. reserves the right to make revisions without notice to product specifications.
For the most current specification sheet, go to www.kohler.com USA or www.kohler.ca Canada.
3-27-2026 17:27 - US-CA

Codes/Standards

ADA, OBC, CSA B651 compliant when installed to the specific requirements of these regulations.

ADA | CSA B651 | OBC

ASME A112.18.1/CSA B125.1
NSF/ANSI/CAN 372
NSF/ANSI/CAN 61
DOE - Energy Policy Act 1992
EPA WaterSense®
California Energy Commission (CEC)
NSF/ANSI/CAN 61|NSF/ANSI/CAN 372
ADA
ICC/ANSI A117.1
CSA B651
OBC

Technical Information

All product dimensions are nominal.

Handle

Handle Style/ Type:	Lever

Spout

Spout Reach:	3-15/16" (100 mm)
Drain With Overflow:	Yes

Flow Rate

Faucet Flow Rate:	1.2 gpm (4.5 l/min)

Valves

Included Valves:	Ceramic disc, Thermostatic, Volume Control

Material

- Premium metal construction for durability and reliability
- KOHLER finishes resist corrosion and tarnishing

Recommended Products/Accessories

K-23726 Drain treatment

K-23723 Faucet cleaner

Warranty

See website for detailed warranty information.

KOHLER® Faucet Lifetime Limited Warranty

DISCONTINUED

1-800-4KOHLER (1-800-456-4537)
Kohler Co. reserves the right to make revisions without notice to product specifications.
For the most current specification sheet, go to www.kohler.com USA or www.kohler.ca Canada.
3-27-2026 17:27 - US-CA

THE BOLD LOOK OF KOHLER.

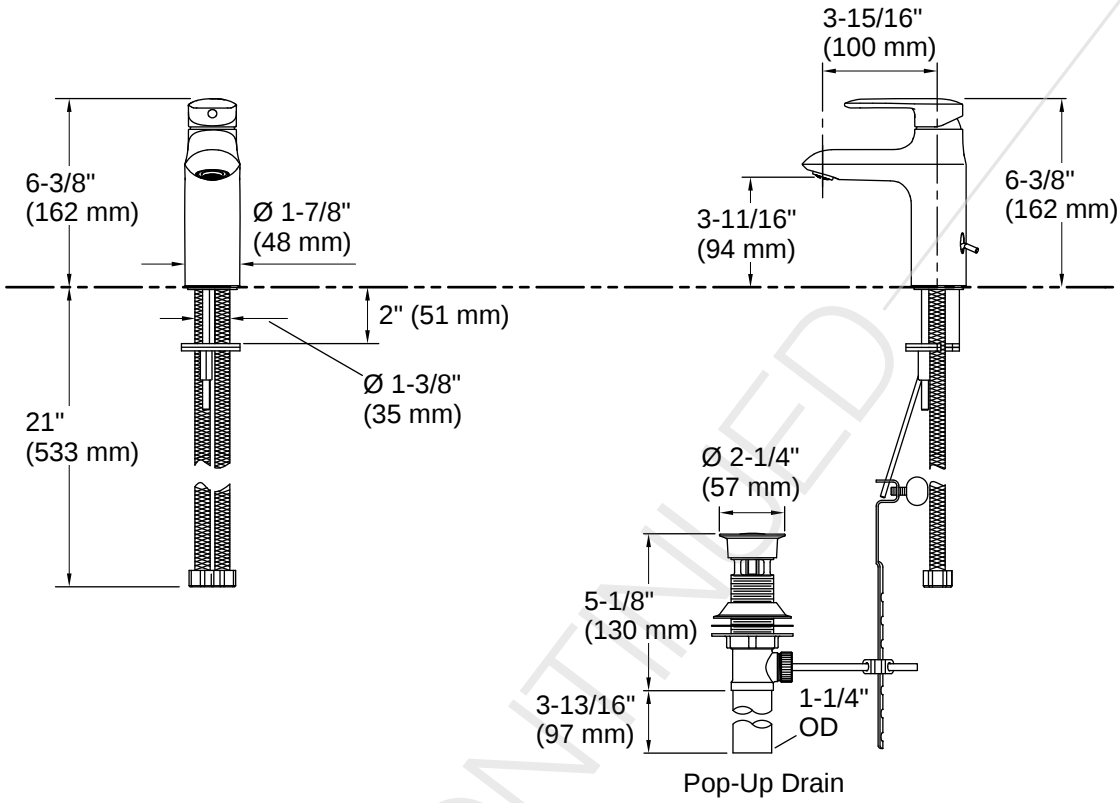

Installation

- Single hole
- Flexible supply lines simplify installation

Installation Notes

Install this product according to the installation instructions.

ADA compliant for handles only.
ADA, OBC, CSA B651 compliant when installed to the specific requirements of these regulations.

DISCONTINUED

1-800-4KOHLER (1-800-456-4537)
Kohler Co. reserves the right to make revisions without notice to product specifications.
For the most current specification sheet, go to www.kohler.com USA or www.kohler.ca Canada.
3-27-2026 17:27 - US-CA

THE BOLD LOOK OF KOHLER.