CEILING FAN INSTALLATION MANUAL

Flush Mount – No Light





BEFORE INSTALLATION

SAFETY INFORMATION

Read and save these instructions before installation. Failure to follow them may result in fire, electric shock, or personal injury. For indoor use only; do not use in exposed outdoor locations. This product is not waterproof.

Input: 100-240 V AC, 50 Hz/60 Hz. Maximum motor power: 35 W (45 W for models 60 in. and above).

WARNING

- Turn OFF power at the circuit breaker before installation.
- Install only on an outlet box rated for fan support (minimum 100 lb / 45 kg).
- Properly ground the fan to reduce the risk of electric shock.
- All wiring must comply with applicable local and national electrical codes (NEC).
- Installation by a qualified electrician is strongly recommended.
- Do not use solid-state speed controls or dimmer switches with this product.
- Improper installation may cause fire, electric shock, or structural failure.
- Connect the Live (L), Neutral (N), and Ground wires correctly.
- Ensure all wire connections are secure and properly insulated.
- Do not modify the wiring, receiver, or electrical components.
- Use only approved connectors and wiring devices.
- Disconnect power immediately if an electrical fault is detected.
- Batteries may cause serious injury if swallowed.

CAUTION

- Do not insert objects into moving blades.
- Do not bend blades during installation, balancing, or cleaning.
- Tighten all screws and fasteners securely before operation.
- Allow blades to stop completely before reversing direction.
- Keep hands, hair, and loose clothing away from moving parts.
- Do not operate the fan with damaged or missing parts.
- Maintain at least 30 in. (76 cm) clearance from walls or obstacles.
- Install blades at least 7 ft (2.1 m) above the floor.
- Ensure the ceiling structure safely supports the fan weight.
- Verify all mounting hardware is properly installed before use.
- Do not operate the fan until all components are installed correctly.
- Do not touch the fan while it is moving.
- Turn OFF power before cleaning or maintenance.
- Clean with a soft, dry cloth only. Do not use water, solvents, or abrasives.
- Inspect and retighten all fasteners at least twice yearly.
- Replace damaged parts immediately with manufacturer-approved parts only.
- Batteries are not supplied with this product.
- Install batteries according to the polarity markings.
- Keep batteries out of reach of children.
- Do not mix old and new batteries or different battery types.
- Remove batteries when the remote control will not be used for an extended period.
- Dispose of batteries in accordance with local regulations.

NOTE This manual does not cover all possible situations. Proper installation, operation, and maintenance are the user's responsibility. Retain this manual for future reference.

TOOLS REQUIRED

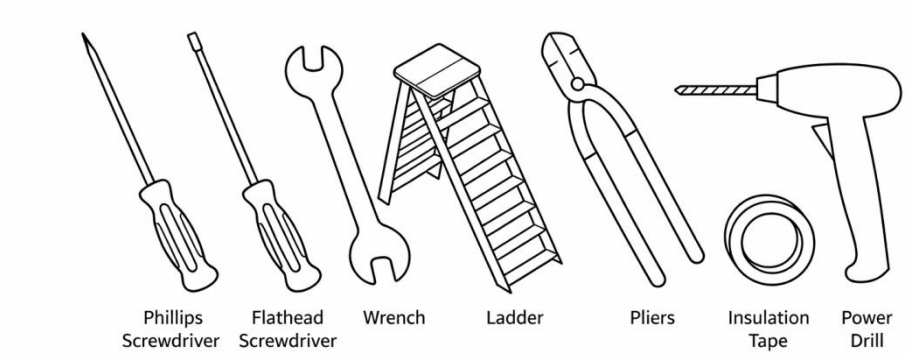

PACKAGE

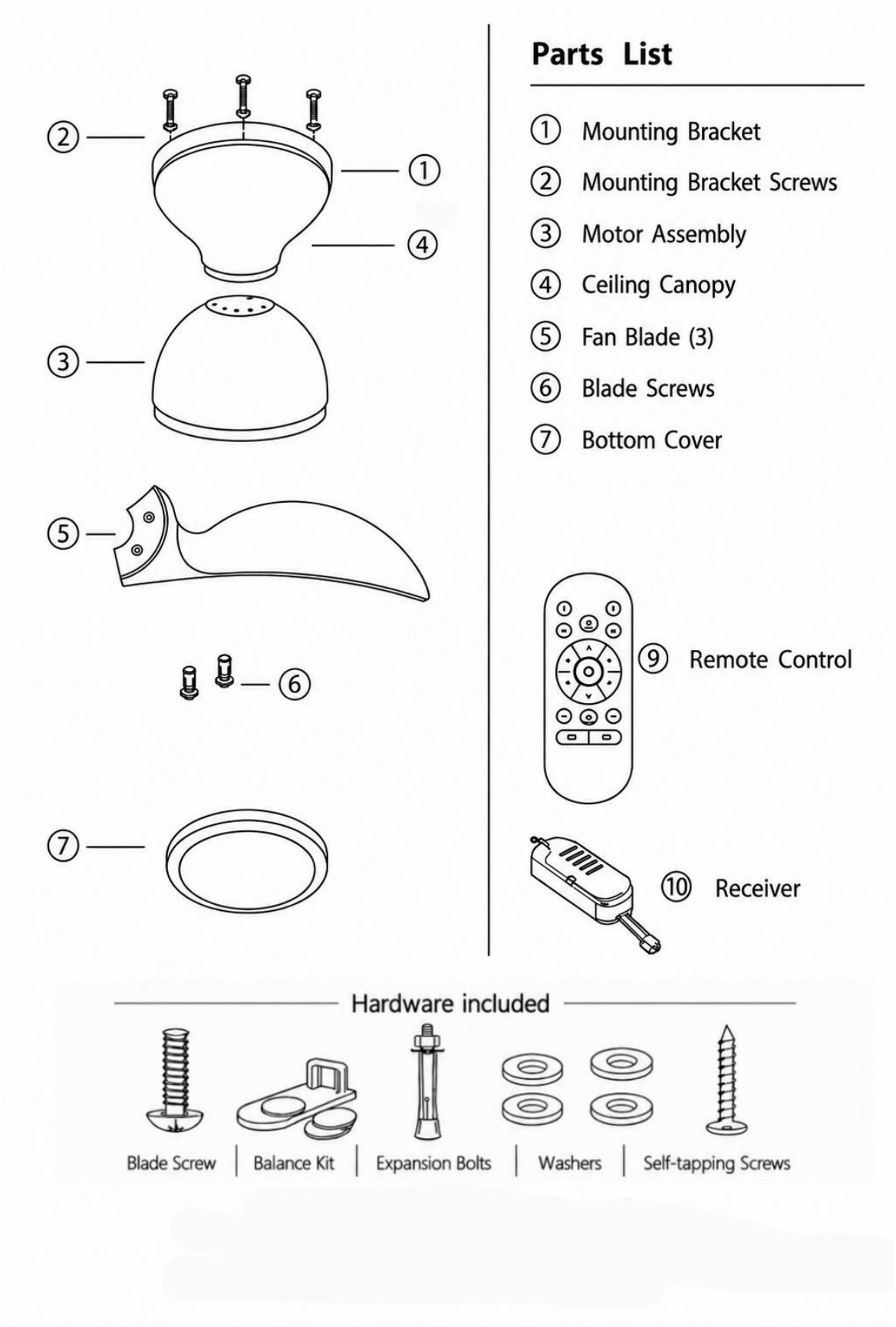
Parts List
① Mounting Bracket
② Mounting Bracket Screws
③ Motor Assembly
④ Ceiling Canopy
⑤ Fan Blade (3)
⑥ Blade Screws
⑦ Bottom Cover
⑨ Remote Control
⑩ Receiver
Hardware included
Blade Screw
Balance Kit
Expansion Bolts
Washers
Self-tapping Screws

SECTION 1 | INSTALL THE FAN BLADES

Install the fan blades using the supplied screws and washers. Ensure all blades are installed in the correct orientation and securely tightened.

1.1 ALIGN AND ATTACH FAN BLADES

1.1.1 Align the blade mounting holes with the corresponding holes on the motor assembly.

1.1.2 Ensure the side marked “This Side Up” faces the ceiling before installation.

1.1.3 Position the bracket between the screw heads and the fan blade.

1.1.4 Insert all blade screws through the bracket and into the mounting holes. Start each screw by hand. Once all screws are correctly positioned, turn them clockwise to tighten securely.

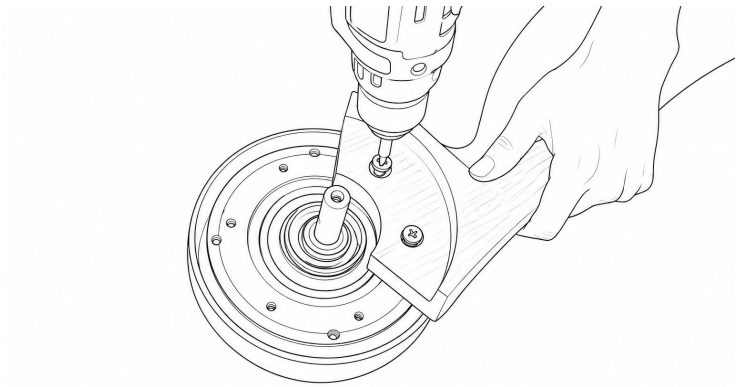

⚠ WARNING - BLADE INSTALLATION

Keep the motor assembly stable during blade installation. Ensure all blade screws are securely tightened before operation.

1.2 SECURE ALL FAN BLADES

1.2.1 Install the remaining blades in the same orientation.

1.2.2 Tighten all blade screws evenly and ensure each screw is installed with a washer.

1.2.3 Gently check each blade after installation. If any blade is loose or moves, tighten the corresponding screws.

1.2.4 Use a manual Phillips screwdriver for final tightening. Do not overtighten the blade screws.

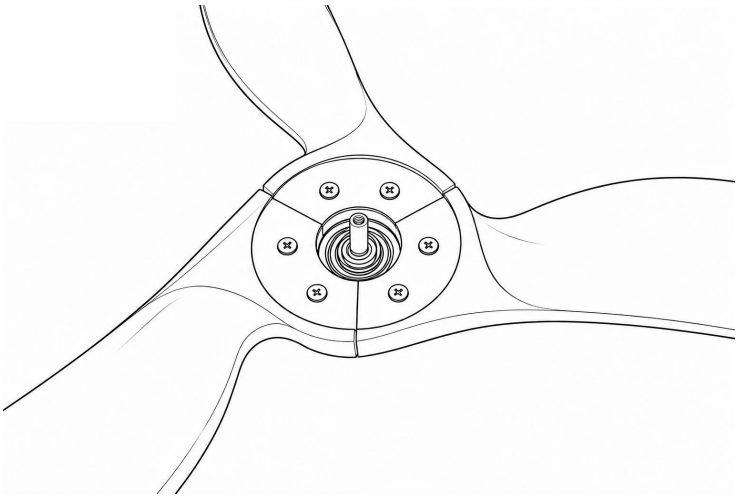

1.3 INSTALL BOTTOM COVER

1.3.1 Align the bottom cover with the motor shaft.

1.3.2 Rotate the bottom cover clockwise until it locks securely into place.

1.3.3 Confirm the bottom cover is firmly attached before operation.

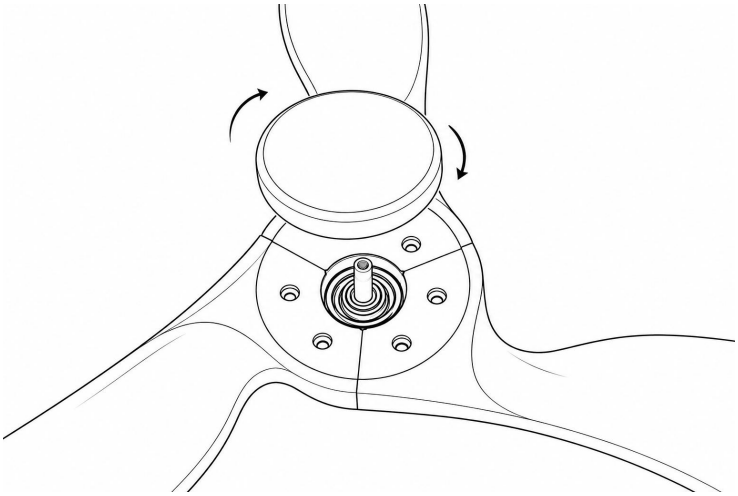

SECTION 2 | INSTALL THE CEILING CANOPY

2.1 PREPARE THE CEILING CANOPY

2.1.1 Loosen and remove the screws securing the mounting bracket to the ceiling canopy.

2.1.2 Separate the mounting bracket from the ceiling canopy. Set the mounting bracket and screws aside for use in Section 3.

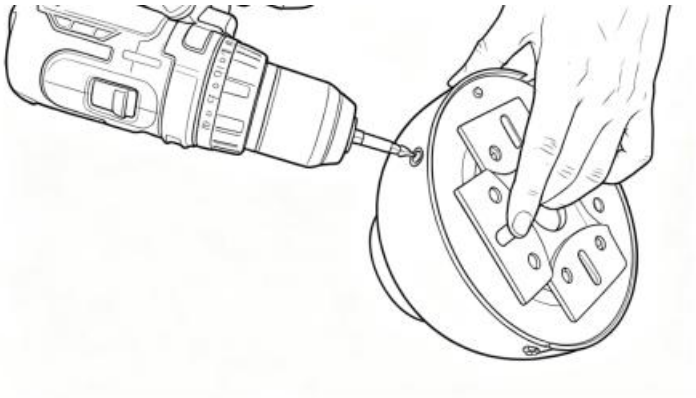

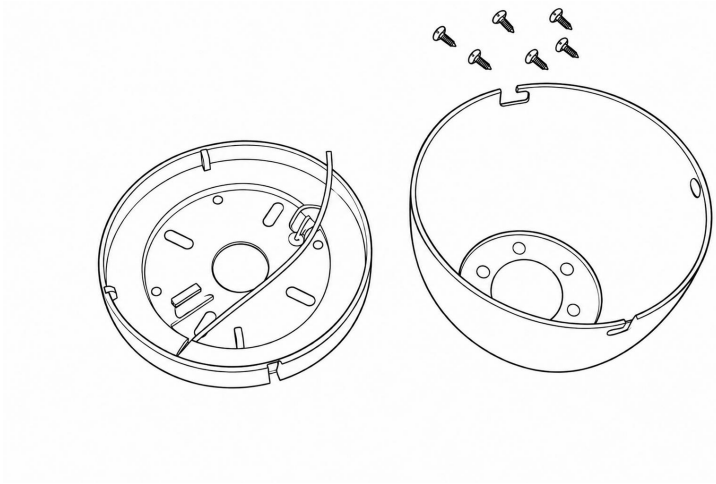

2.2 INSTALL THE CEILING CANOPY

2.2.1 Turn the fan assembly upside down. Remove the screws from the top of the motor assembly and set them aside for reinstallation.

2.2.2 Disconnect the motor wire connector(s). Carefully route the motor wires through the center opening of the ceiling canopy.

2.2.3 Lower the ceiling canopy onto the top of the motor assembly and align the mounting holes on the canopy with the screw holes on the motor assembly.

2.2.4 Reinstall the screws removed in Step 2.2.1 and tighten them securely to fasten the ceiling canopy to the motor assembly.

IMPORTANT: While reinstalling and tightening the screws, hold the motor wires securely to prevent them from twisting, tangling, or becoming pinched between the ceiling canopy and the motor assembly.

NOTE: Make sure all wires pass freely through the center opening and that the ceiling canopy is fully seated before tightening the screws. Do not overtighten.



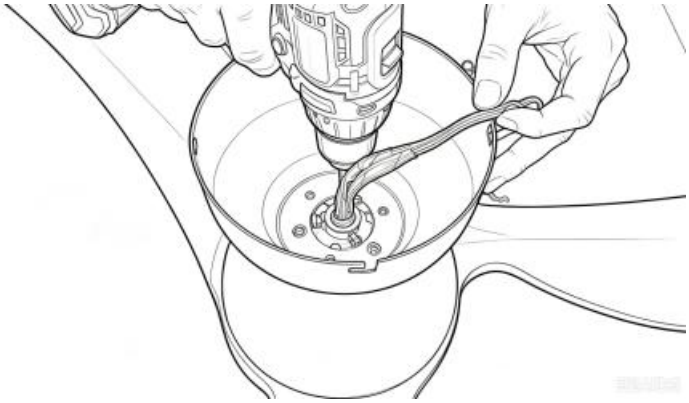

SECTION 3 | INSTALL THE MOUNTING BRACKET

Select the mounting method that matches the ceiling structure.

3.1WOODEN CEILING

3.1.1 Turn OFF power at the circuit breaker before installation.

3.1.2 Confirm that the solid wood joist or other structural wood support can safely carry the fan weight. Use only approved fan-rated mounting hardware.

3.1.3 Position Mounting Bracket (A) against the structural wood support and align the mounting holes.

3.1.4 Fasten the bracket with the Self-Tapping Screws (B) shown. Tighten all screws securely.

WARNING: Secure the bracket directly to solid structural support or to a fan-rated outlet box, as applicable. Do not attach it to drywall, thin wood paneling, a loose ceiling surface, or a standard light-fixture outlet box.

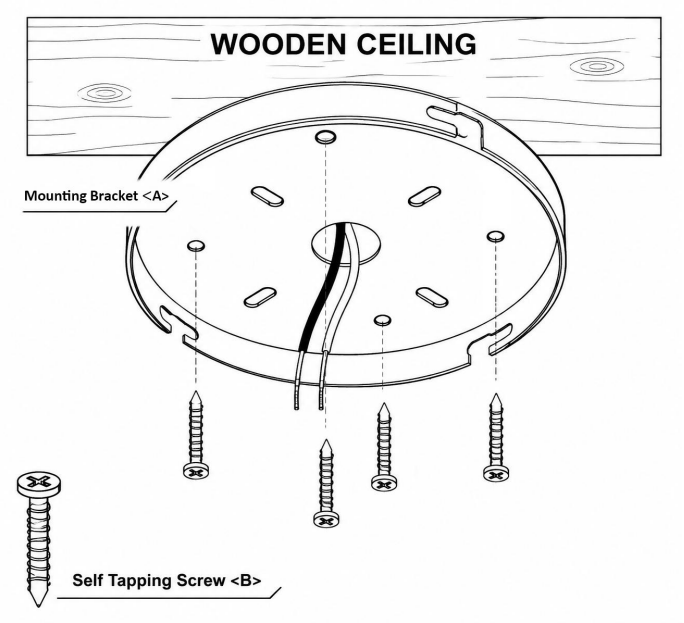

3.2 CONCRETE CEILING

3.2.1 Turn OFF power at the circuit breaker before installation.

3.2.2 Verify the concrete structure can safely support the fan. Do not install on cracked, loose, or damaged concrete.

3.2.3 Hold Mounting Bracket (A) in position and mark the anchor locations. Drill holes suitable for the Expansion Bolts (B).

3.2.4 Install Expansion Bolts (B) through the bracket. Fit Flat Washers (C), Spring Washers (D), and Nuts (E); tighten securely.

IMPORTANT: The outlet box (where used) and supporting structure must be fan-rated and capable of safely supporting the fan weight.

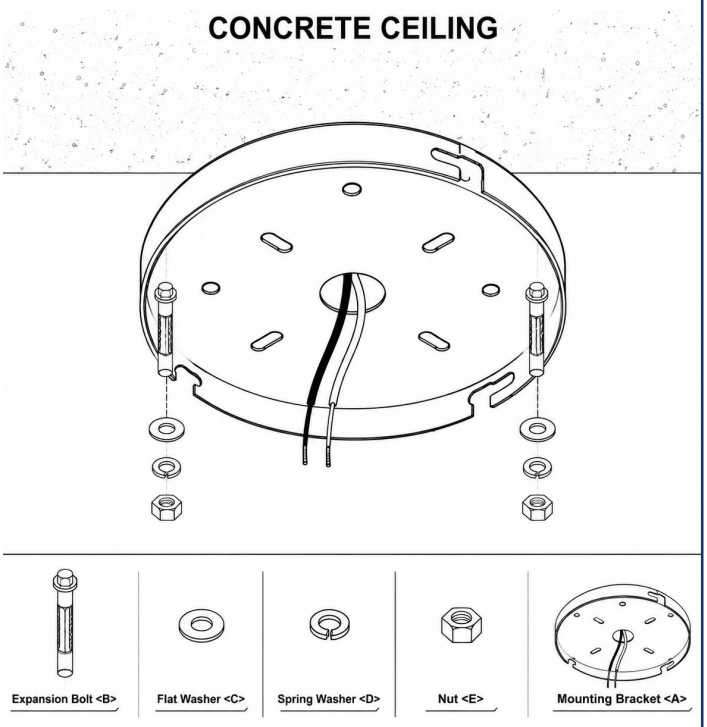

SECTION 4 | INSTALL MOTOR ASSEMBLY & RECEIVER

Install the motor assembly, connect all wiring, position the receiver, and secure the ceiling canopy.

4.1 CONNECT WIRING

4.1.1 ⚠ WARNING - ELECTRICAL CONNECTION

Turn OFF power at the circuit breaker before making any electrical connections.

4.1.2 Connect the household supply wires to the receiver input wires according to the wire labels and wiring diagram:

Receiver Wire ① → Neutral Wire ⑤

Receiver Wire ② → Live Wire ⑥

If the outlet box includes a bare or green grounding wire, securely connect it to the fan grounding wire or the grounding screw on the mounting bracket. Do not omit the grounding connection.

4.1.3 After connecting Wire ① to Wire ⑤ and Wire ② to Wire ⑥, secure each connection with the supplied wire nuts. Tighten the wire nuts securely and ensure that no bare copper wire is exposed.

4.1.4 Connect Receiver Connector ③ to Motor Connector ⑦.

4.1.5 Align the connectors and push them together until fully seated. Do not force the connection.

4.1.6 Place the receiver above the motor assembly. Allow the antenna to hang naturally, then raise the ceiling canopy to cover the receiver. Make sure no wires are pinched.

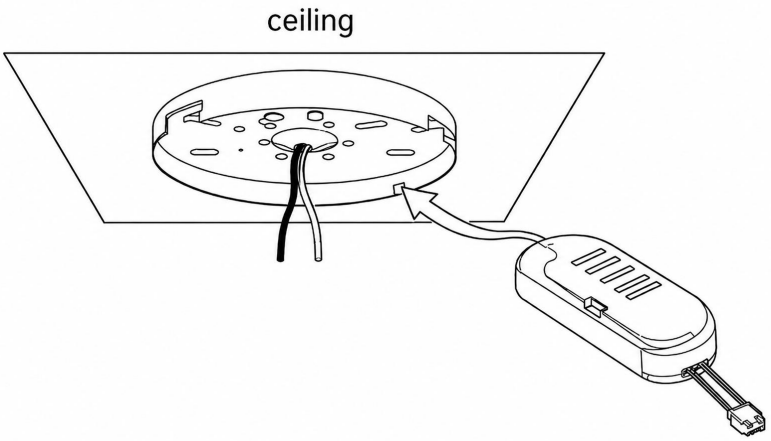

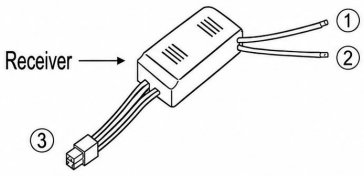

Connect ① to ⑤
Connect ② to ⑥
Connector ③ plugs into Connector ⑦

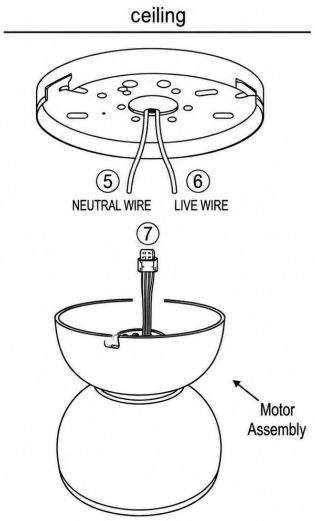

4.2 WIRING CONNECTIONS

4.2.1 ⚠ WARNING

Turn OFF power at the circuit breaker before making any electrical connections.

4.2.2 Use the diagram at right to confirm the supply connections: Black (L) to Live, White (N) to Neutral, and Green to the grounding conductor or hanger bracket grounding screw.

4.2.3 Connect the receiver output connector to the motor plug. Match Pink to Pink, Gray to Gray, and Red to Red. Push the connectors together until fully seated.

4.2.4 Keep the RF antenna naturally extended. Do not pinch, cut, coil, wrap, or damage the antenna.

4.2.5 Before restoring power, verify that all connectors are fully inserted and no wires are pinched.

IMPORTANT

The grounding conductor must not be connected to the receiver.

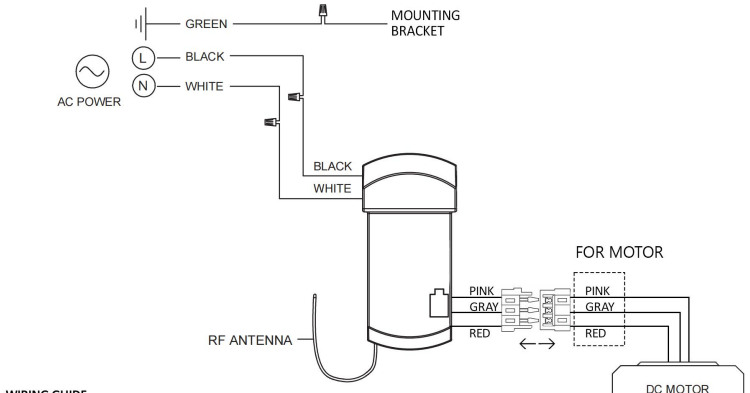

WIRING GUIDE

Power: Black = L (Live) / White = N (Neutral) / Green = Ground

Ground: Connect the ground wire to the hanger bracket (mounting bracket) or grounding wire.

Note: Do not connect the ground wire to the receiver. Ensure proper grounding before operation.

Motor: Pink–Pink / Gray–Gray / Red–Red (Do not mix)

Connectors: Fully insert and secure.

Pins: Do not bend or damage.

RF Antenna: Do not cut or damage. A damaged antenna will disable the remote.

Check all connections before power on.

Receiver and motor connector identification

CONNECTION CHECK

- Ground wire connected to hanger bracket / house grounding wire
- Ceiling supply wires matched to receiver input
- Motor connector colors matched exactly
- RF antenna left naturally extended
- All connectors fully inserted; no wires pinched

4.3 SECURE FAN

4.3.1 Align fan with the mounting bracket.

4.3.2 Ensure all tabs are properly aligned before rotating.

4.3.3 Rotate the fan clockwise until it locks securely into place.

4.3.4 Confirm the fan is fully secured before operation.

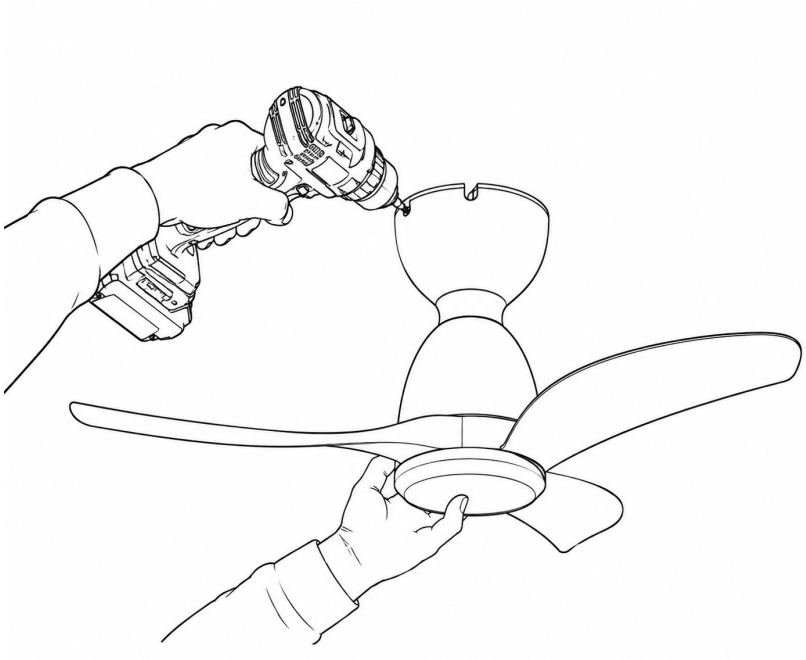

SECTION 5 | REMOTE CONTROL

Use the remote control to operate fan speed, direction, timer settings, and fan functions.

5.1 REMOTE CONTROL FUNCTIONS

ALL OFF: Press to turn off all fan functions.

F: Press to select forward fan rotation (downdraft mode).

R: Press to select reverse fan rotation (updraft mode).

Natural Breeze: Press to activate Natural Breeze mode.

1 – 6: Press to select one of six fan-speed settings.

FAN/OFF: Press to turn the fan on or off.

1H / 2H / 4H: Press to set a 1-hour, 2-hour, or 4-hour automatic shutoff timer.

NOTE: Batteries are not included and must be purchased separately.

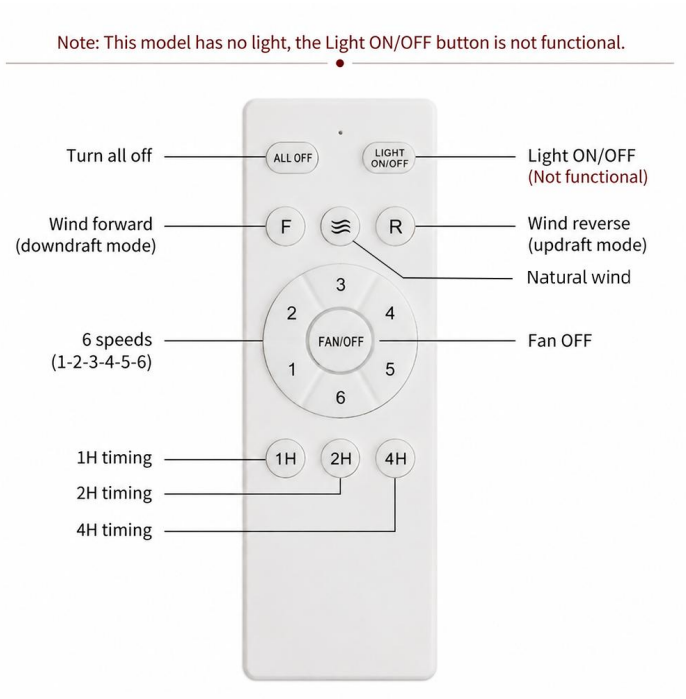

5.2 REMOTE CONTROL PAIRING

5.2.1 Turn off power at the circuit breaker and wait for 15 seconds. Then restore power.

5.2.2 After power is restored, the receiver installed on the ceiling will make a "click" sound. The receiver installed inside the ceiling canopy will make a "click" sound, indicating that the power supply is normal. The fan will not start at this time.

5.2.3 Within 3 seconds after hearing the "click" sound, press and hold the FAN/OFF button on the remote control for 5 – 8 seconds.

5.2.4 During the pairing process, the indicator light on the remote control will turn on.

5.2.5 After pairing is completed, test the fan power switch and speed settings to ensure

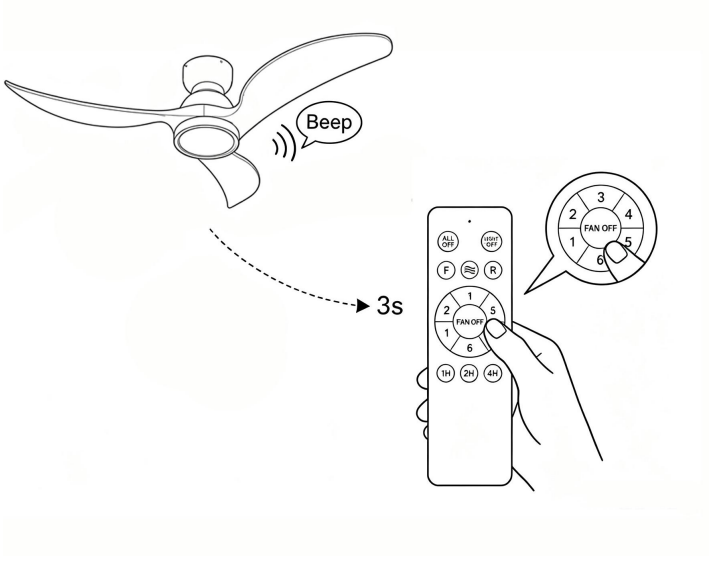

all fan functions work properly. **5.2.6 If the remote control still cannot operate the fan, repeat the pairing procedure or contact the manufacturer for assistance.** **NOTE:Pairing issues may be caused by power, battery, signal, or interference problems. For more details, see TROUBLESHOOTING.**	

TROUBLESHOOTING

WARNING: Disconnect power at the circuit breaker before troubleshooting. Never touch, adjust, or install balancing parts while the fan blades are rotating; wait until they stop completely.

SYMPTOM	SOLUTION
FAN WILL NOT START	• Check circuit-breaker and wall-switch power. • Verify all wiring connections are secure and correct. • Confirm the remote control and receiver are paired. • Replace remote-control batteries if needed.
FAN MAKES NOISE OR RATTLES	• Tighten all motor-housing and blade screws. • Ensure internal wires do not touch each other or metal parts. • A new fan may need a brief break-in period; persistent or severe noise is not normal. • Ensure the canopy is secure and not rubbing against the ceiling.
FAN WOBBLES OR OSCILLATES	• Ensure all blades are installed evenly and securely. • Confirm the mounting bracket and ceiling outlet box are firmly installed. • Use the supplied balancing kit if required; see procedure below.
REMOTE CONTROL DOES NOT WORK	• Weak or incorrectly installed batteries may cause no response; check the batteries and replace them if needed. • A power interruption or voltage fluctuation may cause pairing to be lost; repeat the pairing procedure. • Installation or wiring changes may affect communication; verify receiver power and wiring connections. • Distance, obstructions, or nearby identical fans may interfere with the signal; move closer, remove obstructions, and pair one fan at a time if needed. • If the remote or receiver has been replaced, or the problem continues after re-pairing, check for a possible remote-control or receiver fault and contact customer service if needed.
PARTS ARE MISSING OR DAMAGED	• Contact customer service or the supplier for replacement parts.

BLADE BALANCING PROCEDURE (USE ONLY IF WOBBLE PERSISTS)

1. Turn the fan OFF and wait for a complete stop. Label the blades 1, 2, and 3 with removable tape.
2. Attach the supplied balancing clip near the middle of one blade. Restore power and test at the speed where wobble is most noticeable.
3. Turn the fan OFF and wait for a complete stop before moving the clip. Test each blade and adjust the clip position until wobble is minimized.
4. Remove the clip. Attach an adhesive balancing weight to the top centerline of the selected blade at the same location, press firmly, and retest.

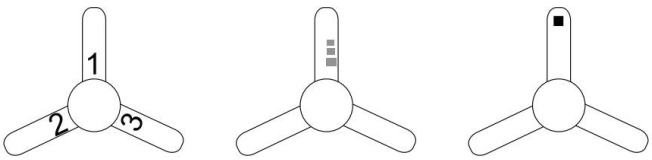

NOTE: If the problem persists after completing the above checks, contact customer service for assistance. For installation guidance, please refer to the installation video available on the product page where you purchased the fan. If needed, similar installation videos may also be used as a helpful reference.