INSTALLATION
Product Manual

Version: 210210-01-24A-TH

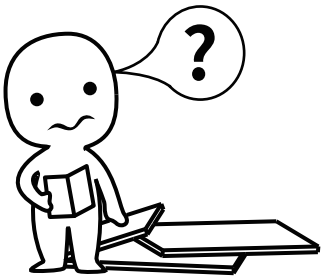

IMPORTANT INFORMATION!

please read the entire manual before starting to assemble and/or using this product.follow the manual thoroughly and keep it for further reference.

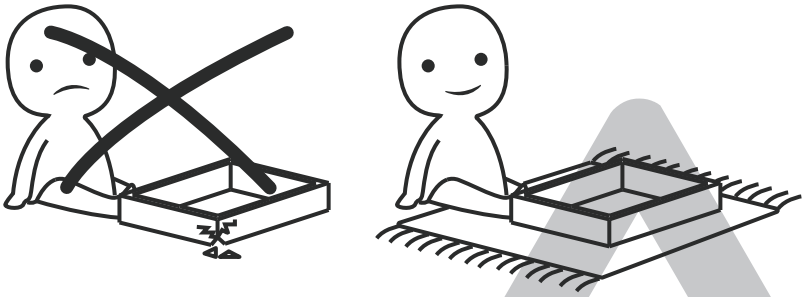

AVOID SCRATCHES!

In order to avoid scratching this furnuture should be assembled on a soft layer-could be a rug.

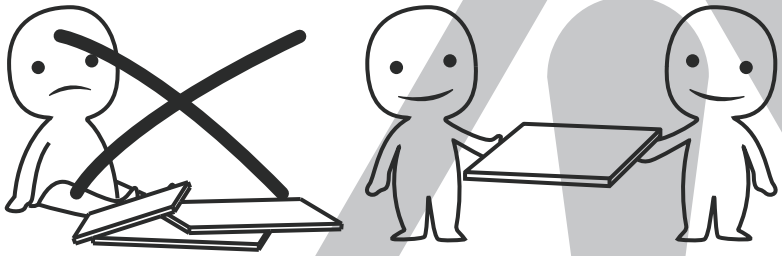

IMPROVE EFFICIENCY !

Try to find a partner to install with you, which can speed up the installation efficiency and shorten the time.

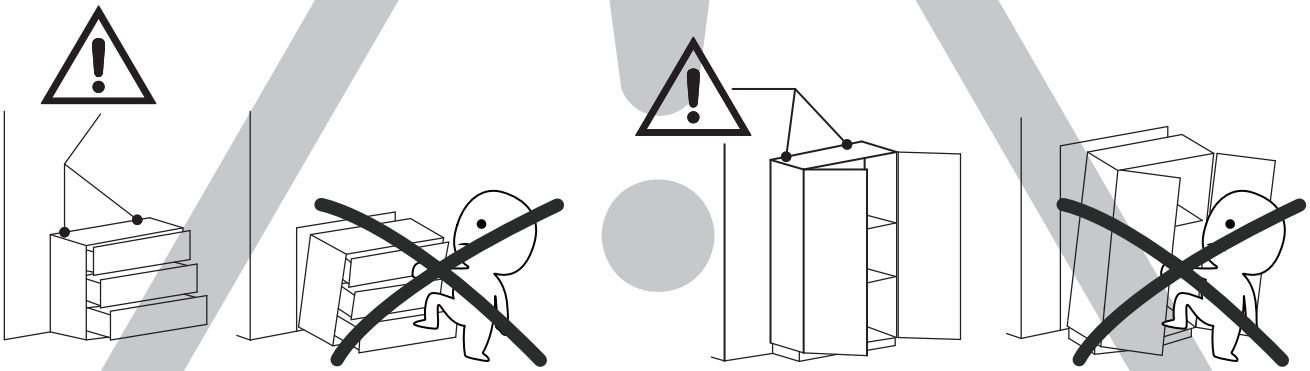

ANTI-TOPPLE WARNING !

Overturned furniture can cause serious or fatal crush injuries. To prevent tipping over, be sure to use the wall attachment, if not included with this product. Please purchase the wall attachment that fit your wall. If unsure, seek professional advice. Please read and follow each step of the instructions carefully.

IMPORTANT !

It is important that any product which is assembled using any kind of screw is re-tightened 2 weeks after assembly,and once every 3 months - in order to assure stability through-out the lifespan of the product.

For regular maintenance and cleaning of the product, for the frame, please use a rag dipped in neutral detergent to fully wipe it, and then dry it with a clean rag.For glass materials, wipe with a rag dampened with water glass cleaner, and then dry with a dry rag.

Do not use an electric screwdriver, and do not use too much force when installing, because the board is easy to break.

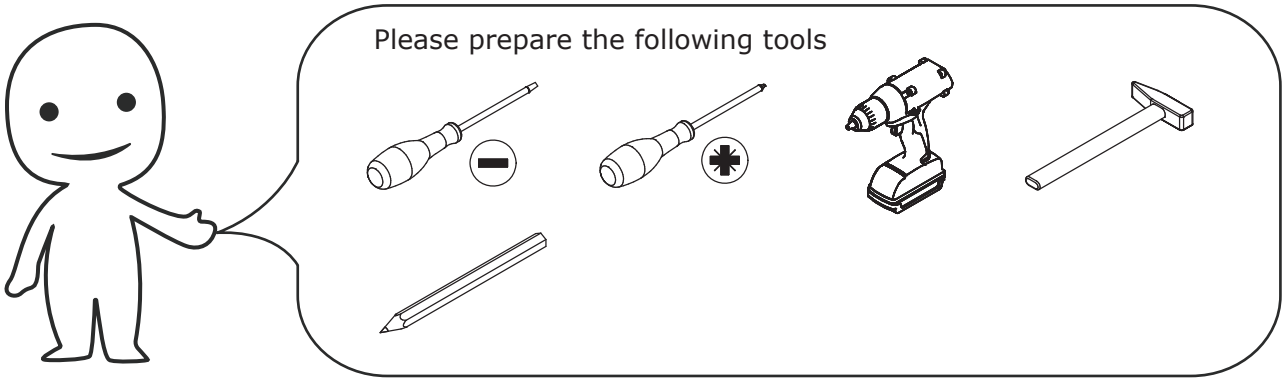

When installing, please carefully confirm whether each screw corresponds to the manual, accessories with similar shapes can be distinguished by size

A x 34	B x 34	C x 16	D x 18	E x 12
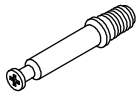 M6 x 40 mm	∅15 x 10 mm	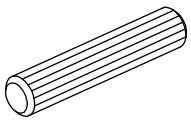 ∅6 x 30 mm	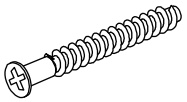 M5 x 40 mm	M6 x 12 mm
F x 10	G x 8	H x 22	I x 2	J x 5
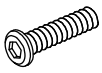 M6 x 20 mm	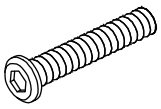 M6 x 35 mm	M3.5 x 12 mm	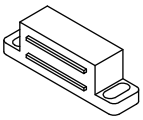	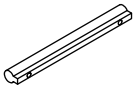 220-96
K x 4	L x 4	M x 2	N x 2	O x 17
M4 x 18 mm		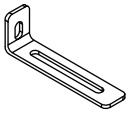	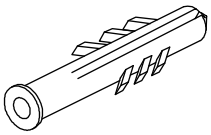 ∅8 x 35 mm	∅1.5 x 15 mm
P x 4	Q x 30	R x 2	S x 4	T x 6
M6 x 20 mm	M3.5 x 12 mm	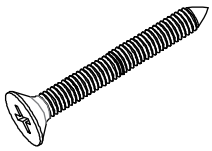 ∅5 x 40 mm		M4 x 15 mm
U x 4	V x 2	x 1	28 x 3	
M3.5 x 14 mm		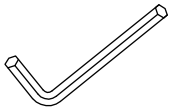 #4	12”	

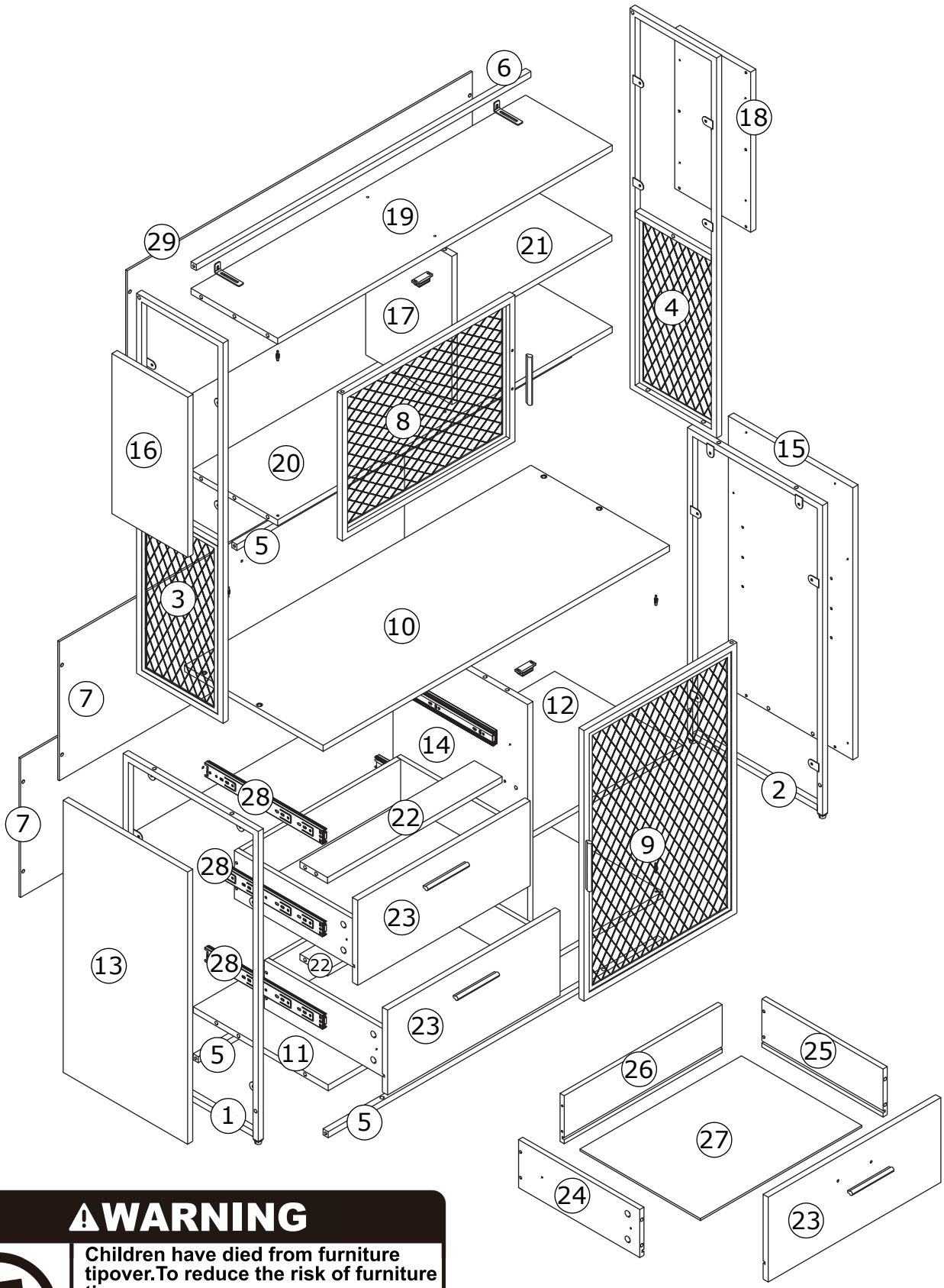

⚠WARNING

Children have died from furniture tipover.To reduce the risk of furniture tipover:

- ALWAYS install tipover restraint provided.
- NEVER put a TV on this product.
- NEVER allow children to stand,climb or hang on drawers,doors,or shelves.
- NEVER open more than one drawer at a time.
- Place heaviest items in the lowest drawers.

This is a permanent label.
Do not remove!

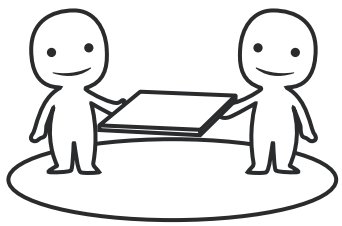

ASSEMBLED BY 2 ADULTS

Slides Must Be Separated Before Assembly.
After Separated, Set Aside Until Needed for Assembly.

Las diapositivas deben separarse antes del montaje.
Después de la separación, déjelo a un lado hasta que sea necesario.

Les glissières doivent être séparées avant l'assemblage.
Après la séparation, mettez de côté jusqu'au moment de l'assemblage.

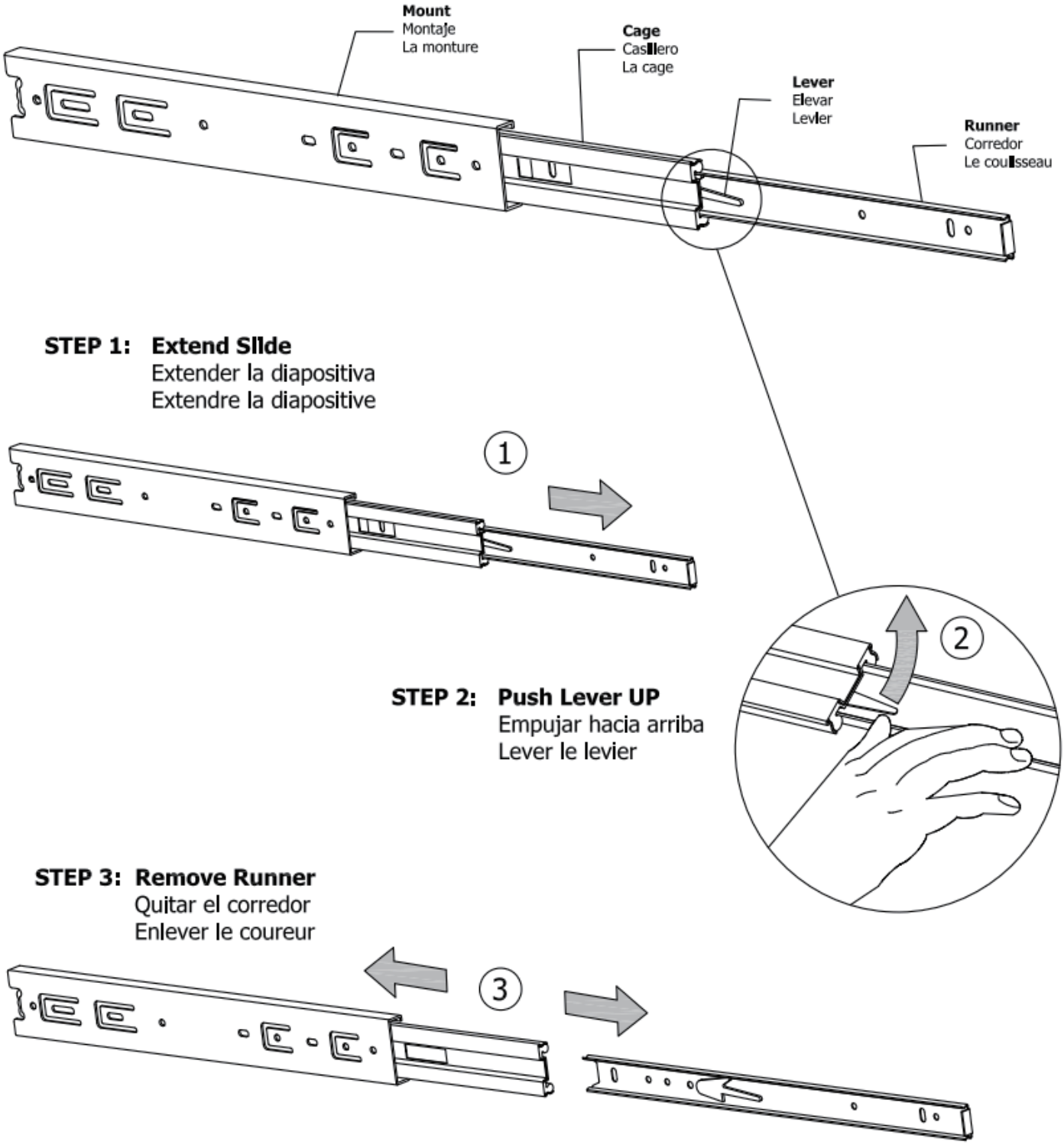

1

Q x 6

M3.5 x 12 mm

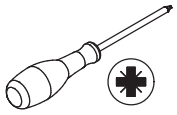

U

M3.5 x 14 mm

Q

M3.5 x 12 mm

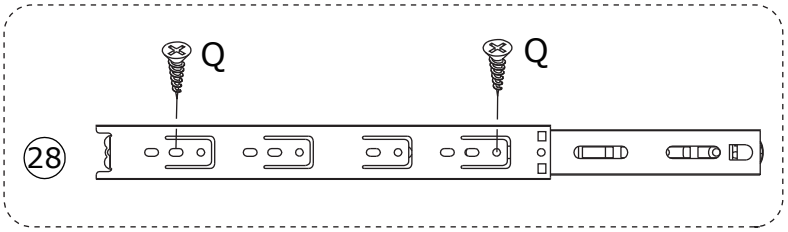

Separate glide into two parts at first.
Fix slide rail 28 to plate 14 with screw(Q) as shown.

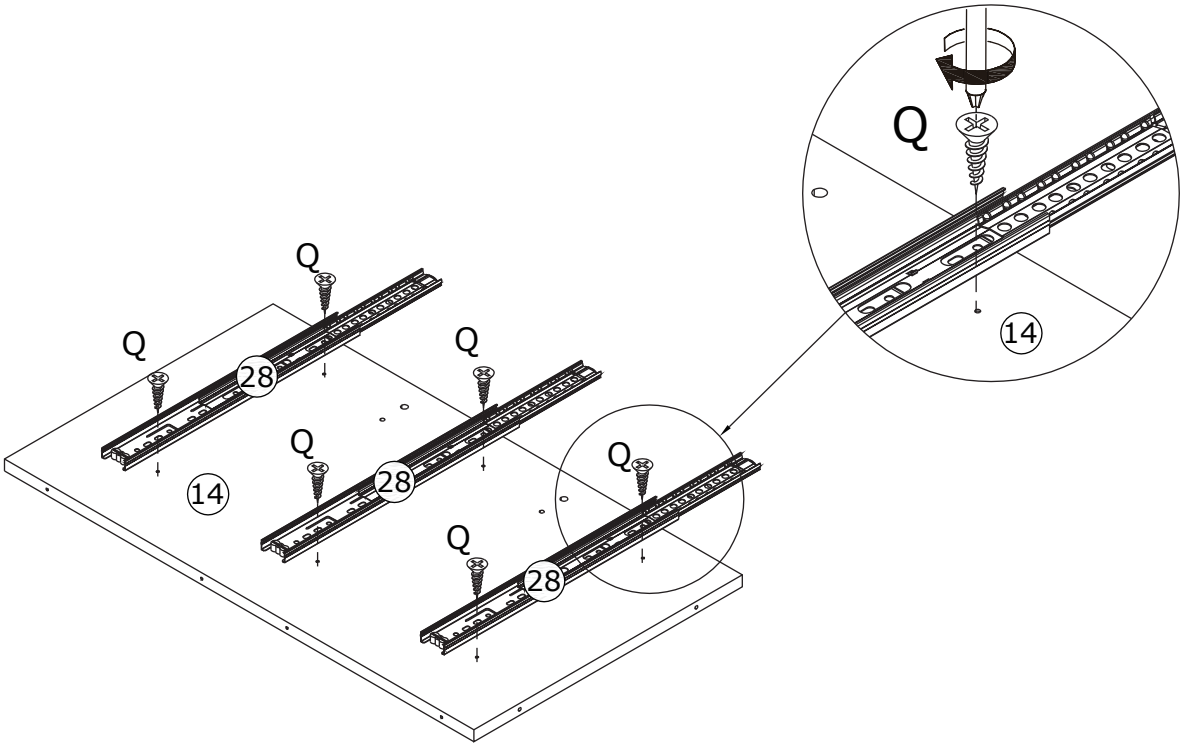

2

F x 4	
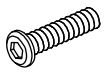 M6 x 20 mm	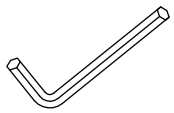

Fix tube 5 to plate 11 with screw(F) as shown.

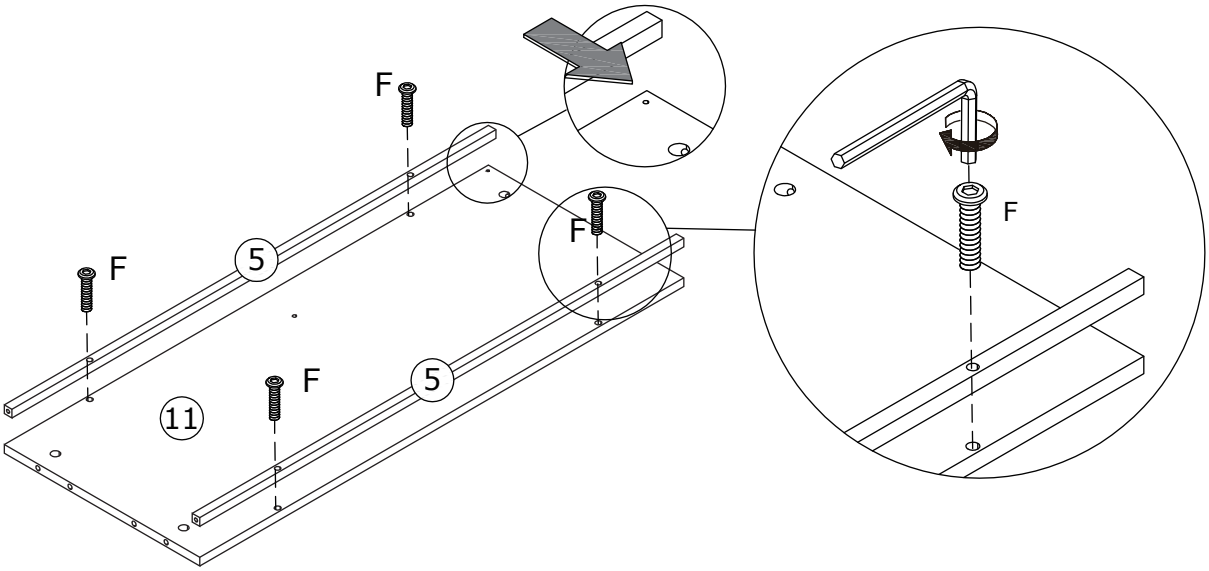

3

A x 2	D x 2	
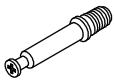 M6 x 40 mm	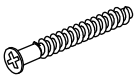 M5 x 40 mm	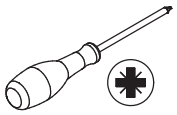

Fix plate 11 to plate 14 with screw(D) as shown.
Insert quickfit screw(A) into plate 14 as shown.

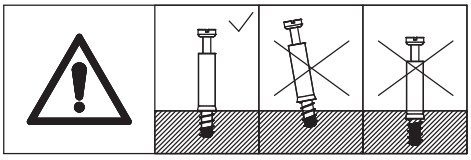

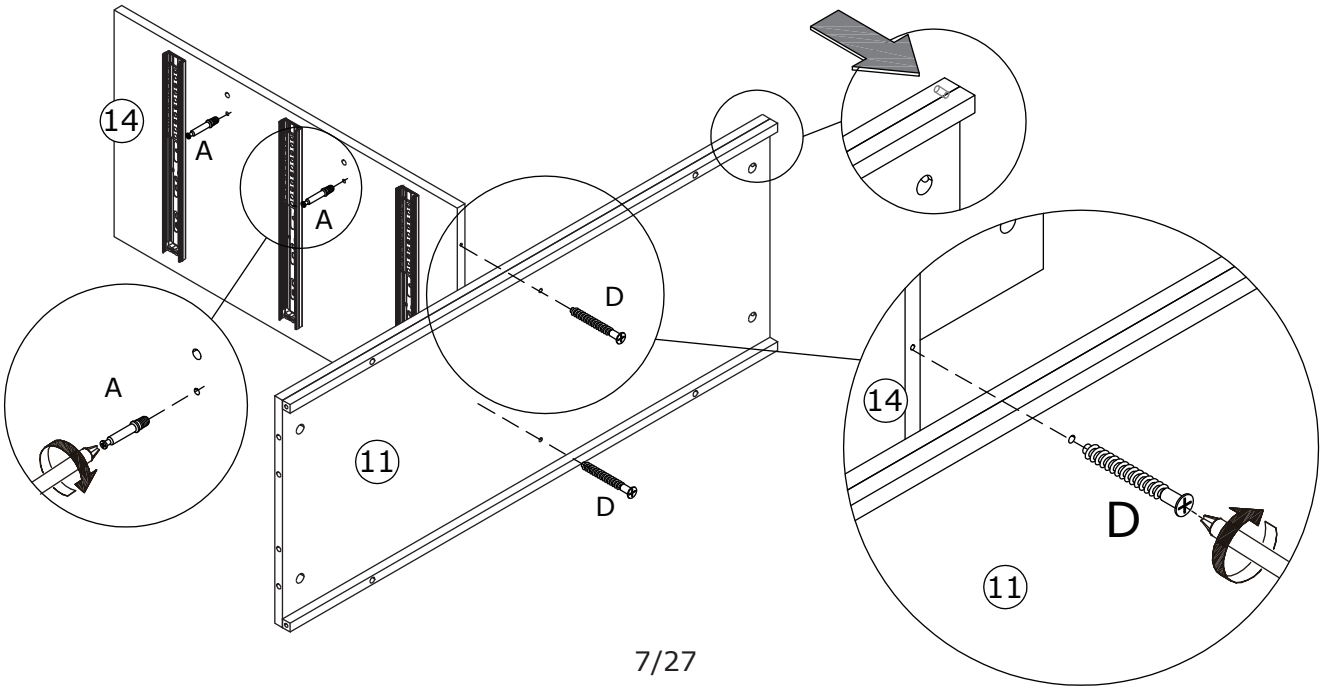

4

B x 2	C x 2
	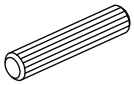
∅15 x 10 mm	∅6 x 30 mm

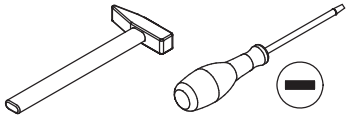

Insert wooden dowel(C) into plate 22, then attach to plate 14.

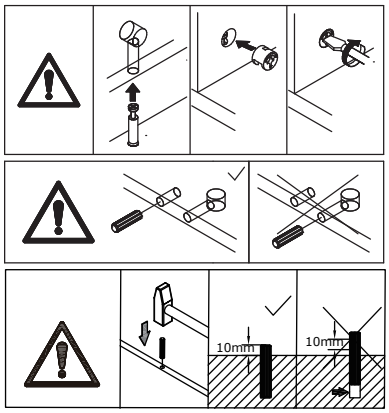

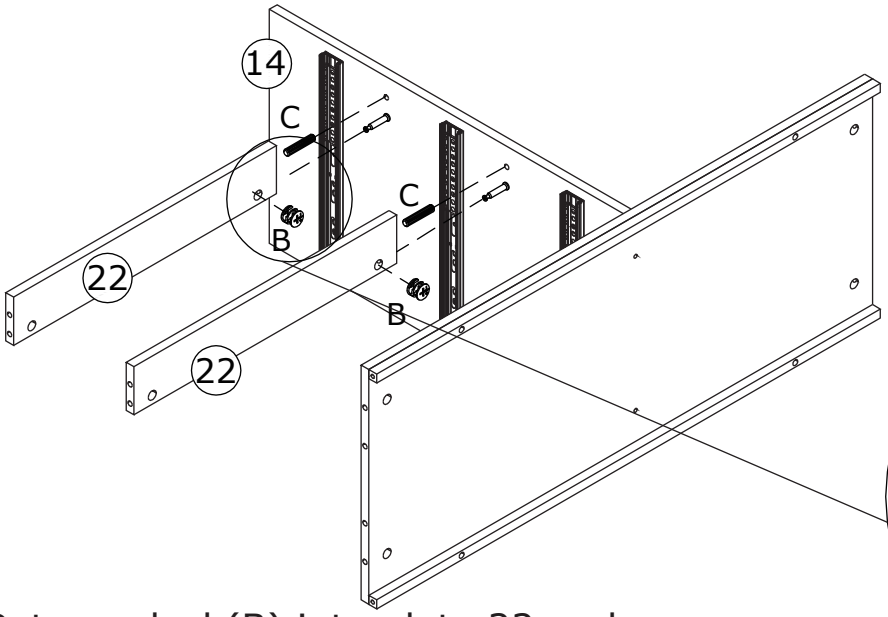

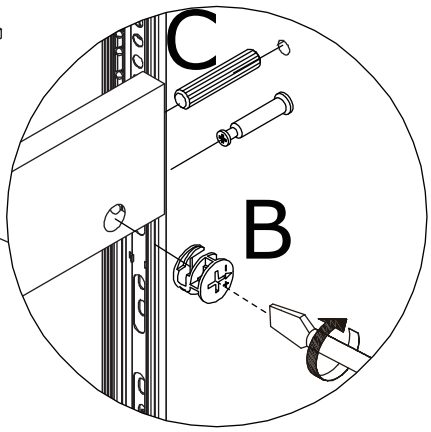

Put cam lock(B) into plate 22 and turn clockwise to tighten as shown.

5

G x 4	
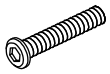	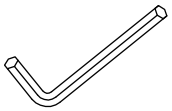
M6 x 35 mm	

Fix iron stand 1 and 2 to tube 5 with screw(G) as shown.

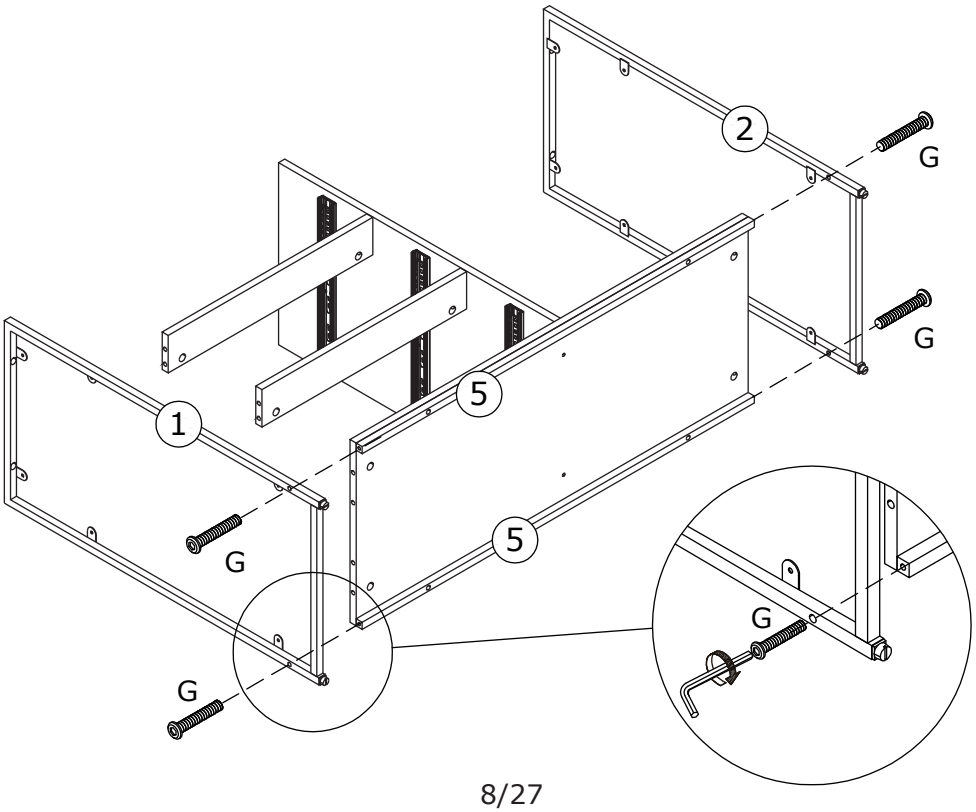

6

A x 2	I x 1	U x 2	
M6 x 40 mm		M3.5 x 14 mm	

Insert quickfit screw(A) into plate 10 as shown.
Fix part(I) to plate 10 with screw(U) as shown.

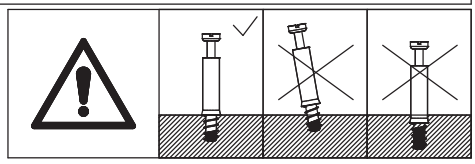

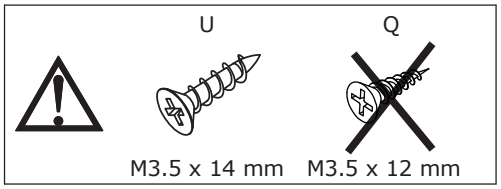

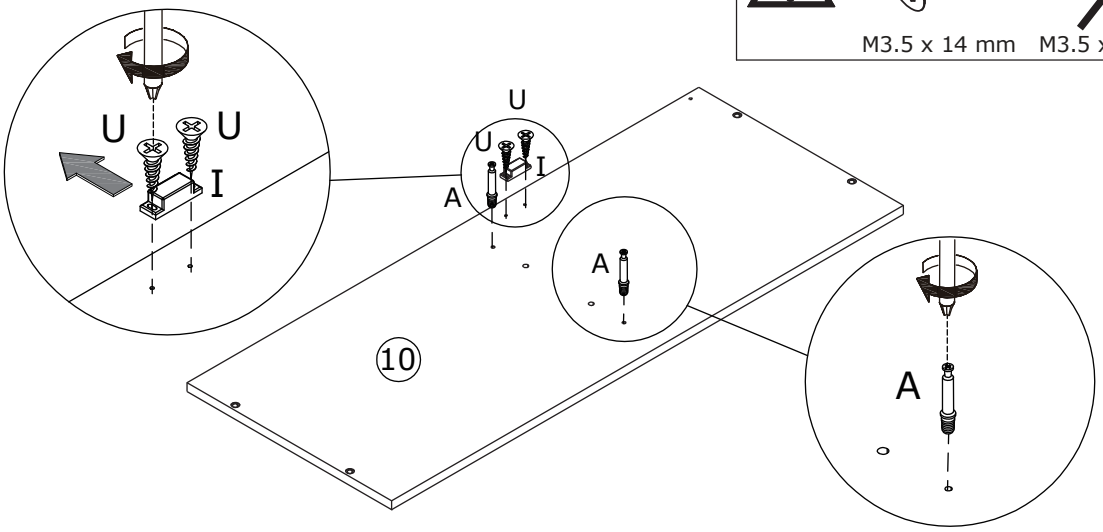

7

B x 2	C x 2	P x 4	
∅15 x 10 mm	∅6 x 30 mm	M6 x 20 mm	

Insert wooden dowel(C) into plate 14, then cover plate 10, turn cam lock(B) in plate 14 clockwise to tighten as shown.

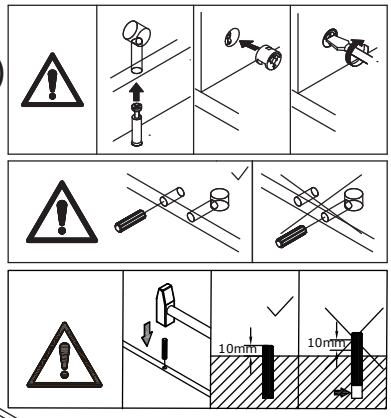

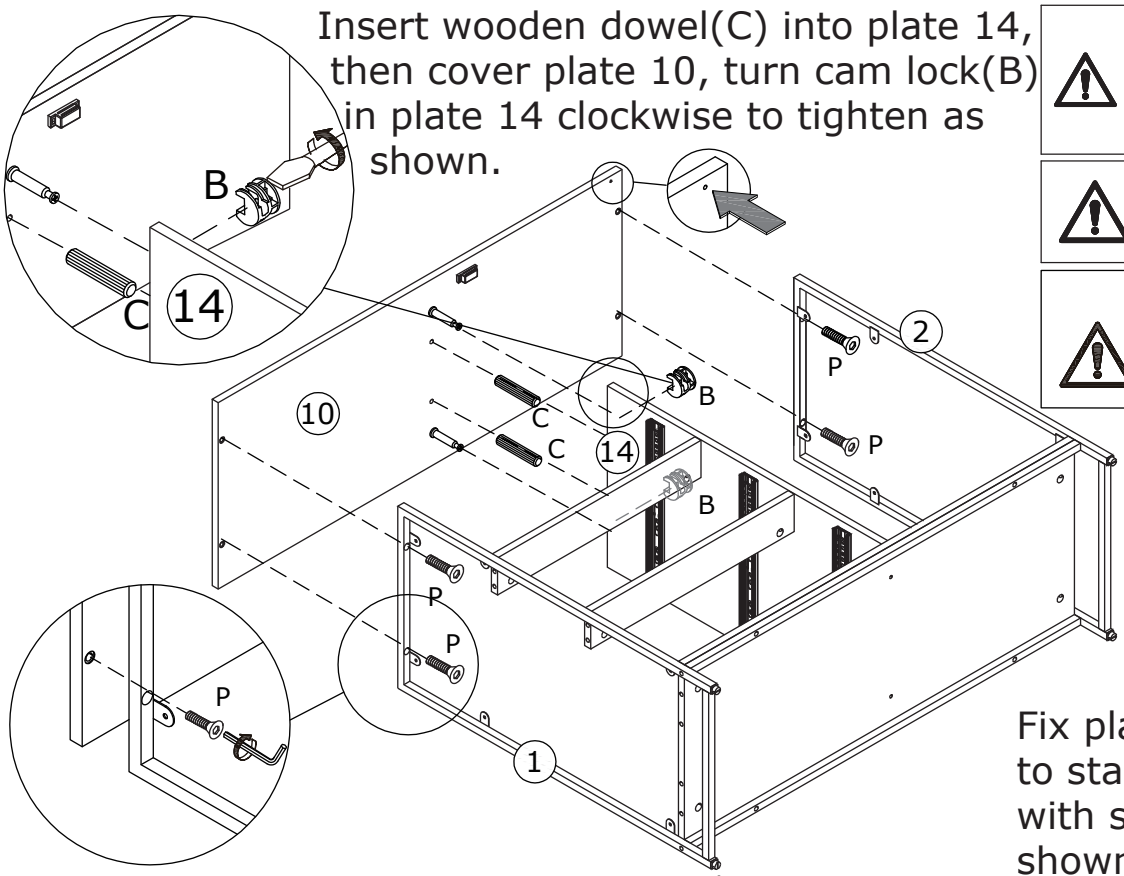

Fix plate 10 to stand 1 and 2 with screw(P) as shown.

8

A x 6

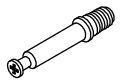

M6 x 40 mm

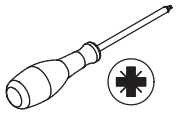

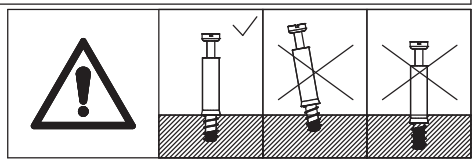

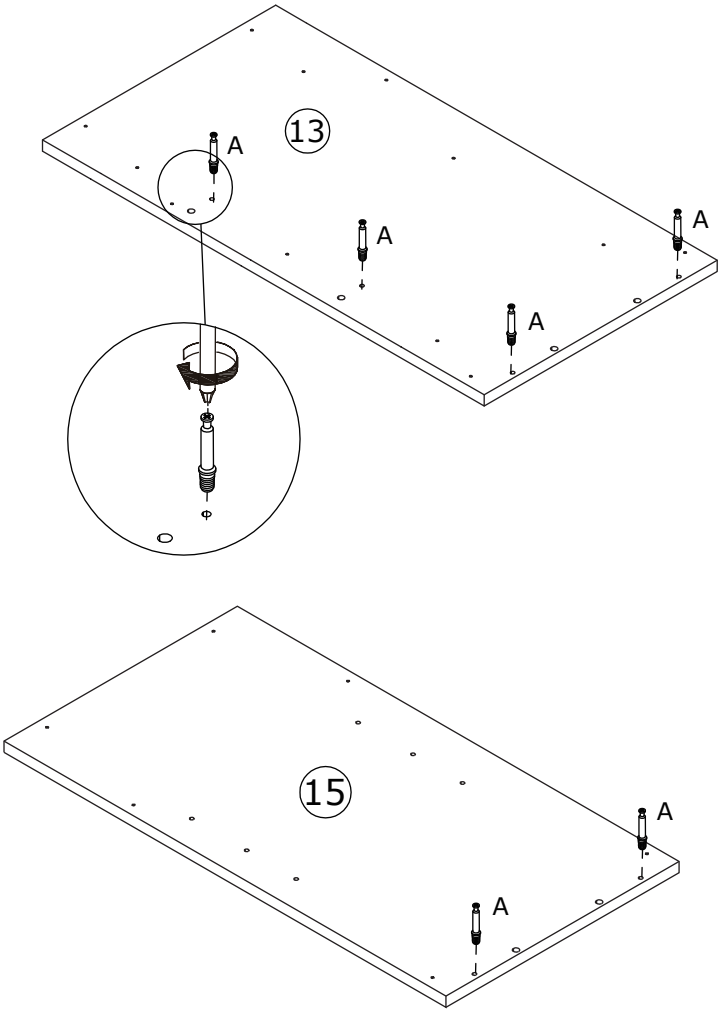

Insert quickfit screw(A) into plate 13 and 15 with a screwdriver as shown.

10

B x 6	C x 6	H x 12	
∅15 x 10 mm	∅6 x 30 mm	M3.5 x 12 mm	

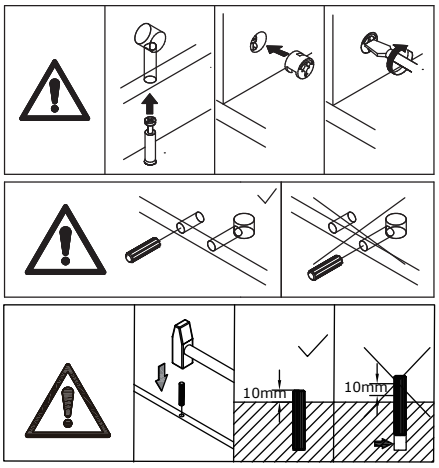

Insert wooden dowel(C) into plate 11 and 22, then attach plate 13 and 15 , turn cam lock(B) in plate 11,12 clockwise to tighten as shown.
Fix plate 13 and 15 to stand 1 and 2 with screw(H) as shown.

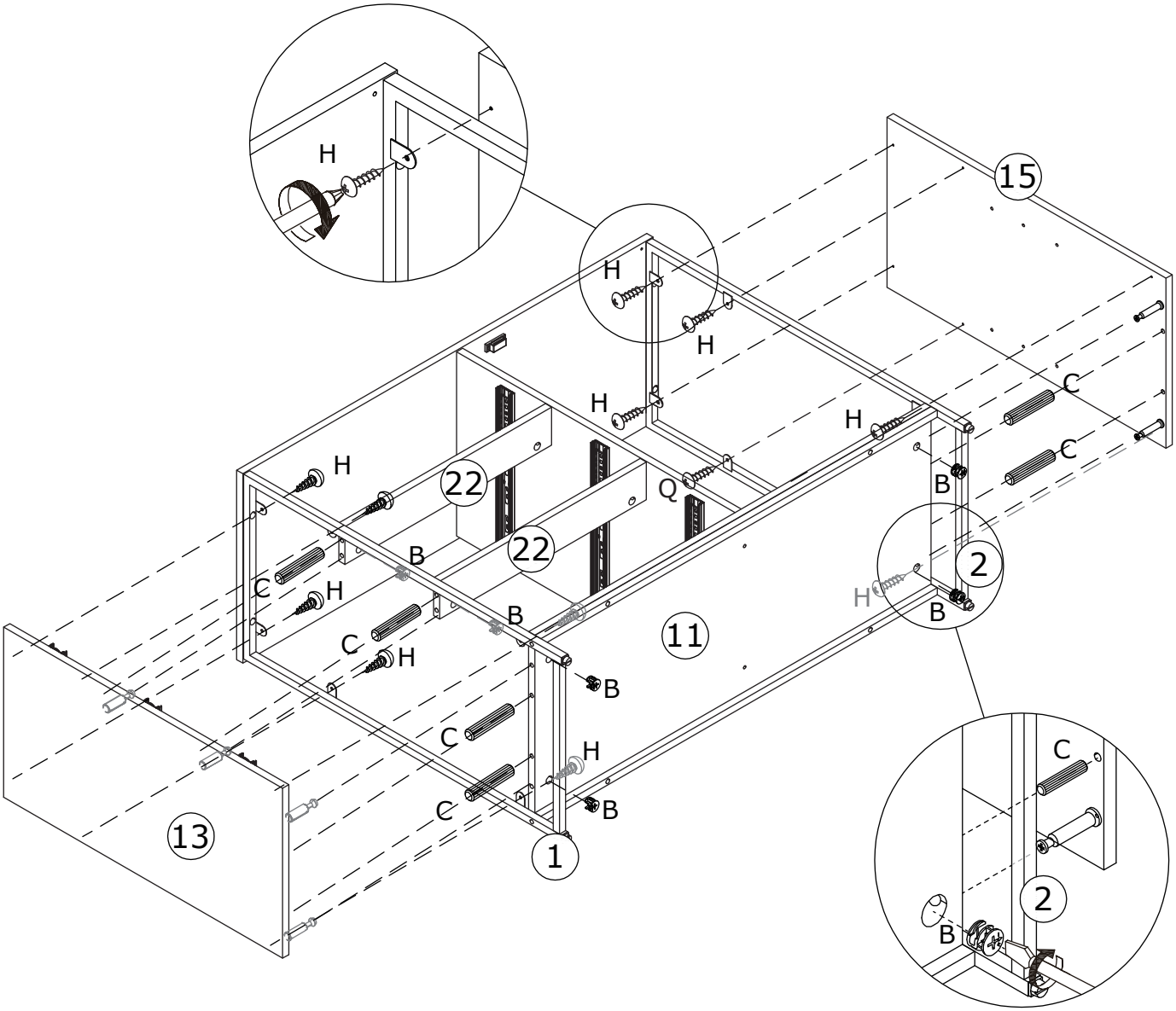

11

E x 8	Q x 4
M6 x 12 mm	M3.5 x 12 mm

U	Q
M3.5 x 14 mm	M3.5 x 12 mm

Flip the cabinet to back.
Fix back plate 7 to iron stand 1 and 2 with screw(E) as shown.
Fix plate 7 to plate 14 with screw(Q) as shown.

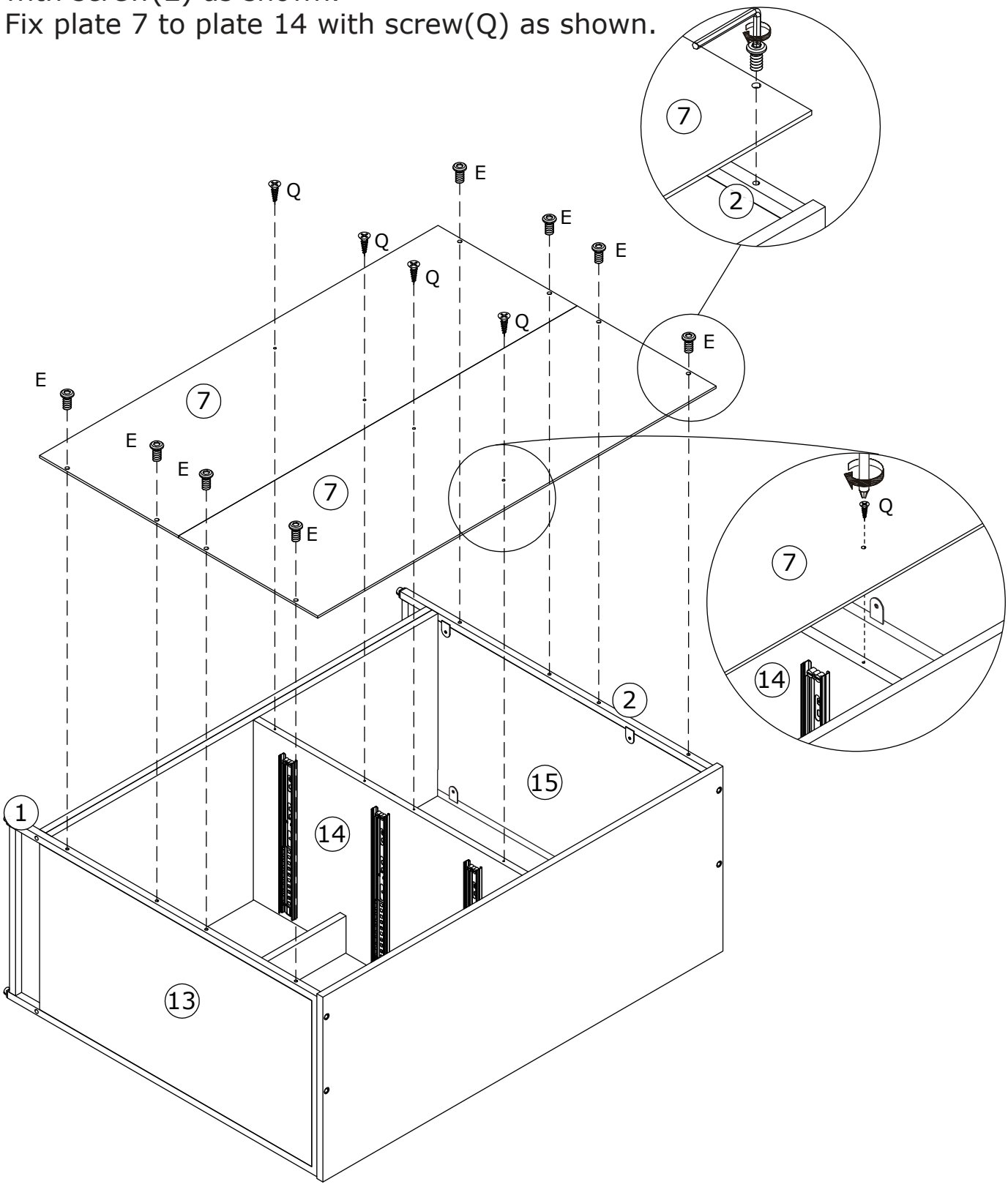

12

O x 5

∅1.5 x 15 mm

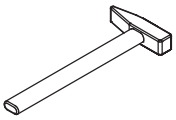

Fix back plate 7 with nail(O) as shown.

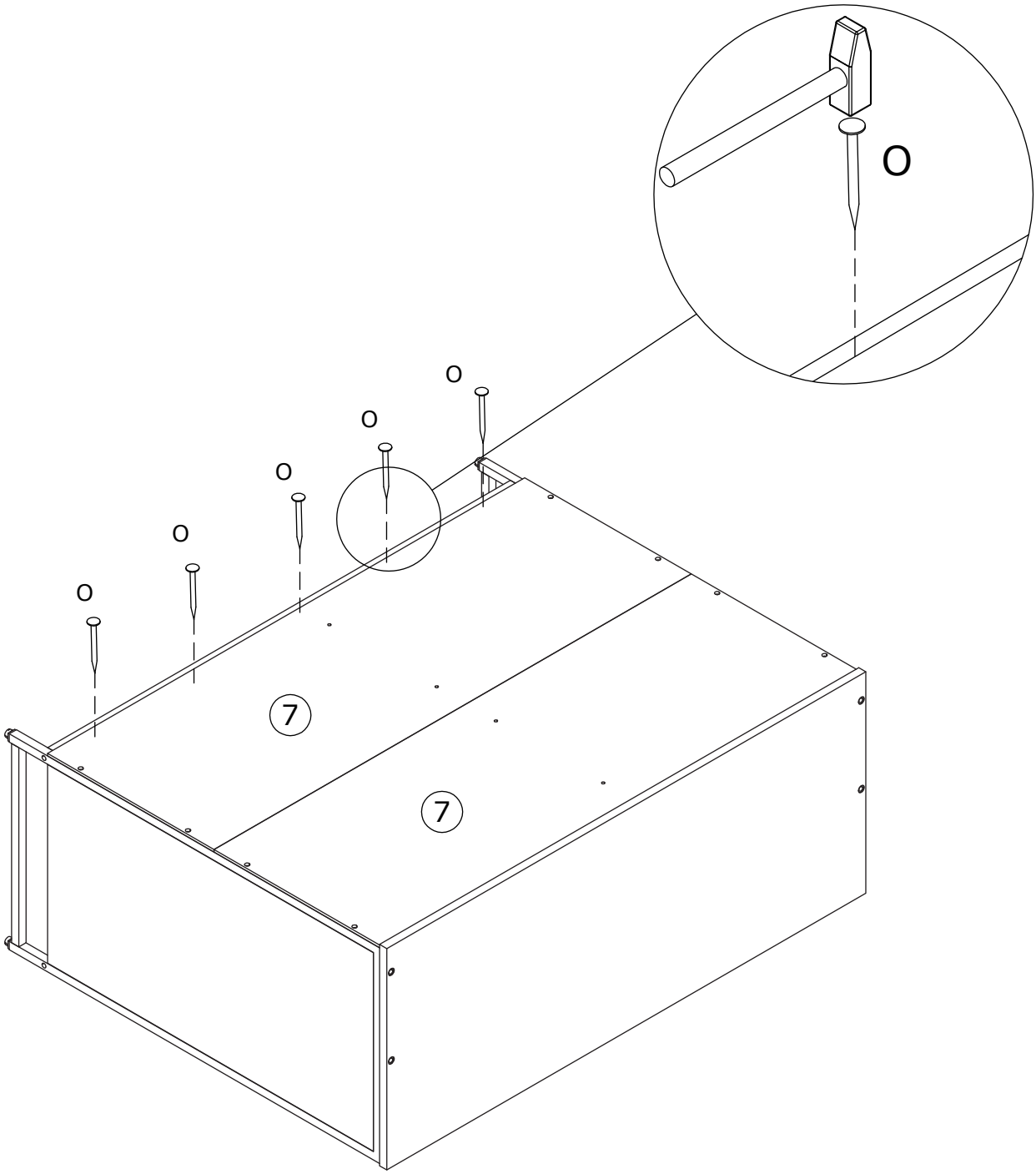

13

Q x 6

M3.5 x 12 mm

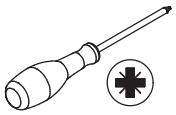

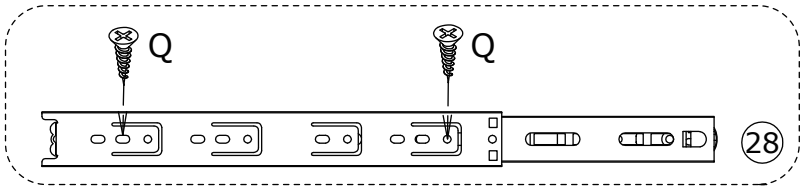

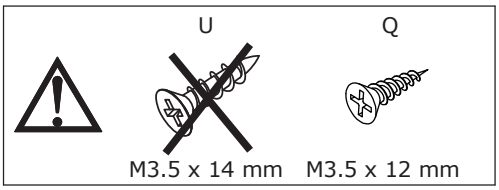

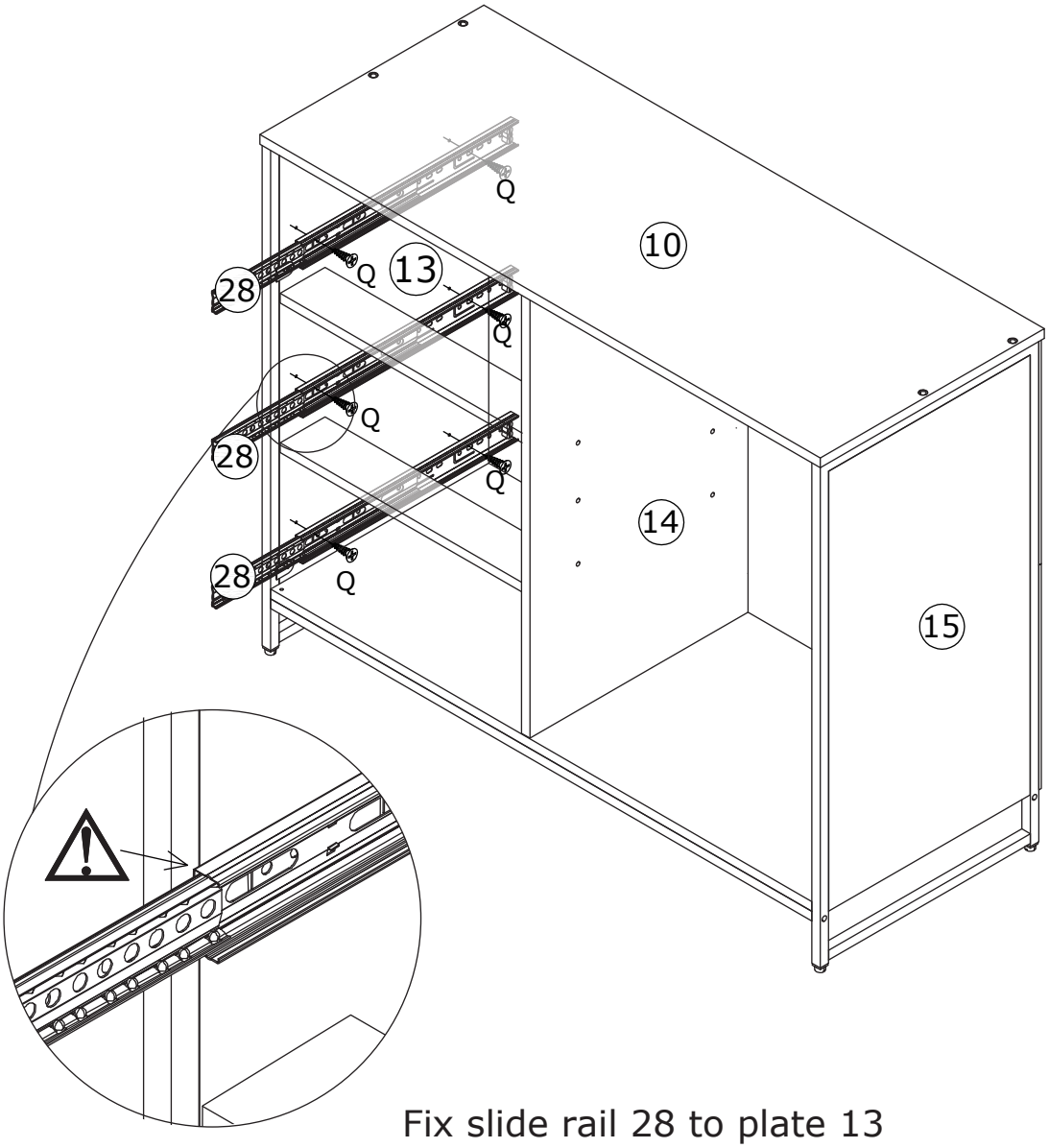

Fix slide rail 28 to plate 13
with screw(Q) as shown.

14

S x 4

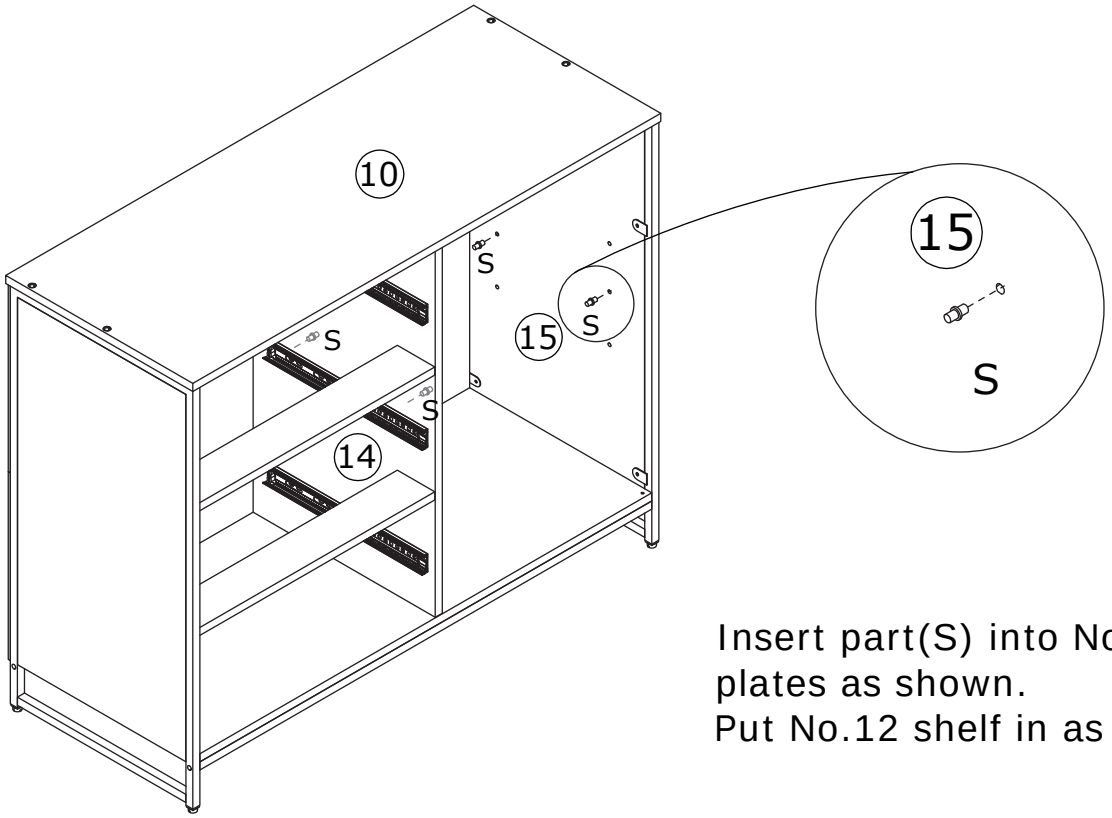

Insert part(S) into No.14,15 plates as shown.
Put No.12 shelf in as shown.

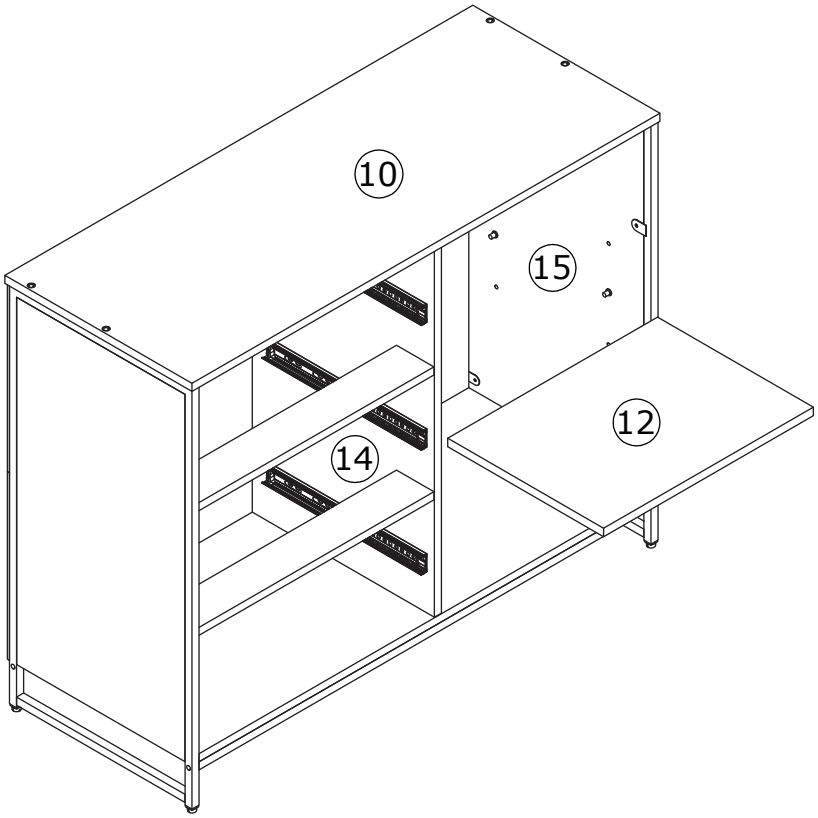

15

A x 2	D x 2	I x 1	U x 2	
M6 x 40 mm	M5 x 40 mm		M3.5 x 14 mm	

Fix part(I) to plate 19 with screw(U) at first.
Insert quickfit screw(A) into plate 17 as shown.
Fix plate 17 to plate 19 with screw(D) as shown.

U	Q
M3.5 x 14 mm	M3.5 x 12 mm

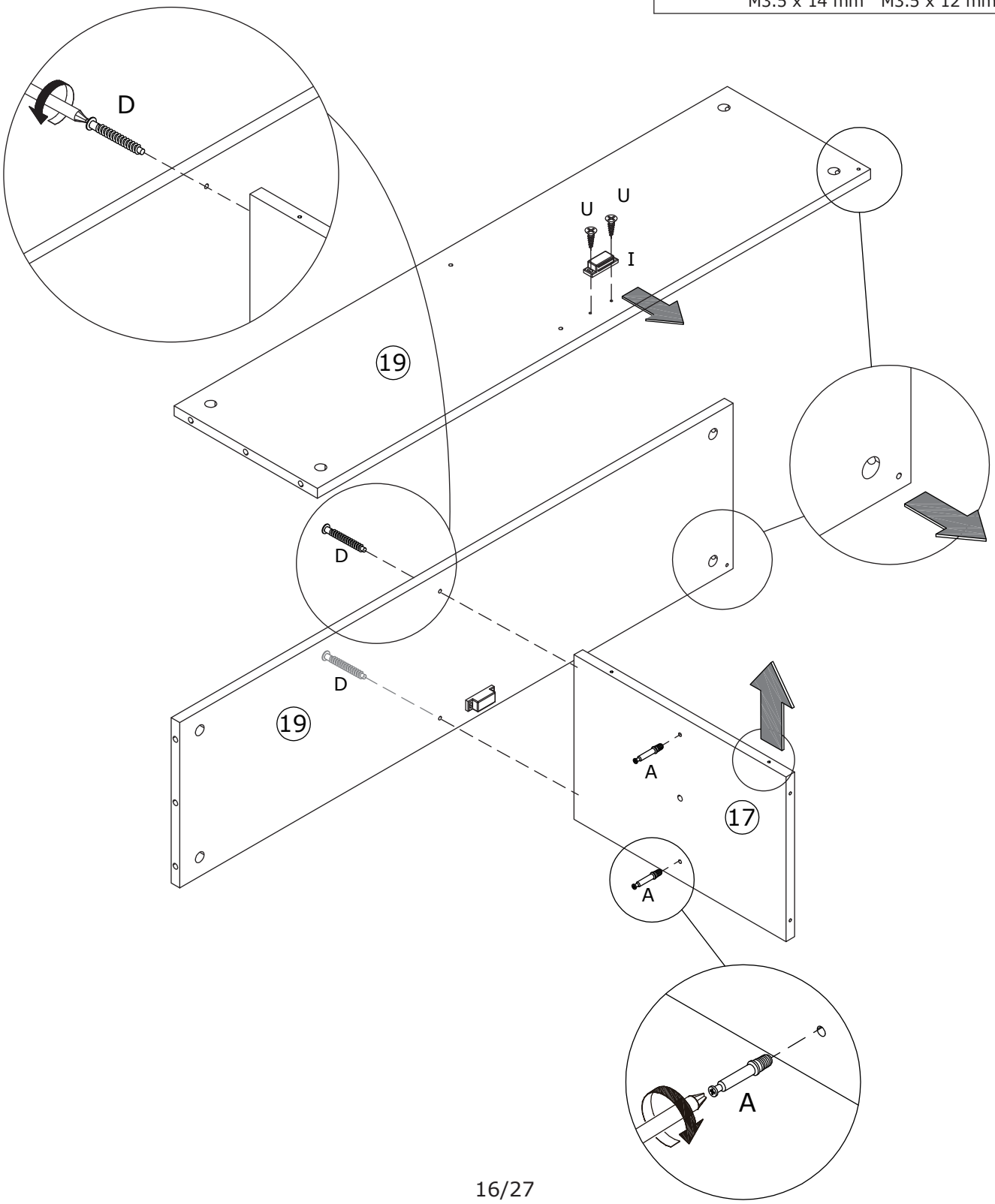

16

B x 2	C x 1
	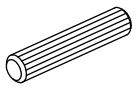
∅15 x 10 mm	∅6 x 30 mm

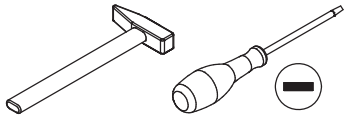

Insert wooden dowel(C) into plate 21, then attach to plate 17 , turn cam lock(B) in plate 21 clockwise to tighten as shown.

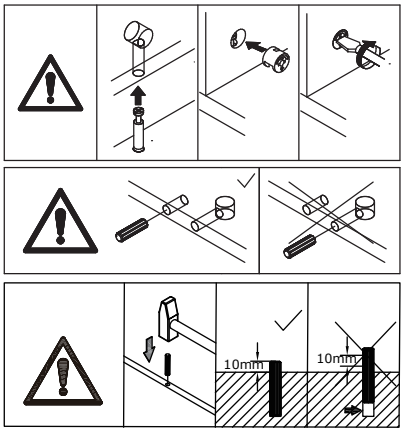

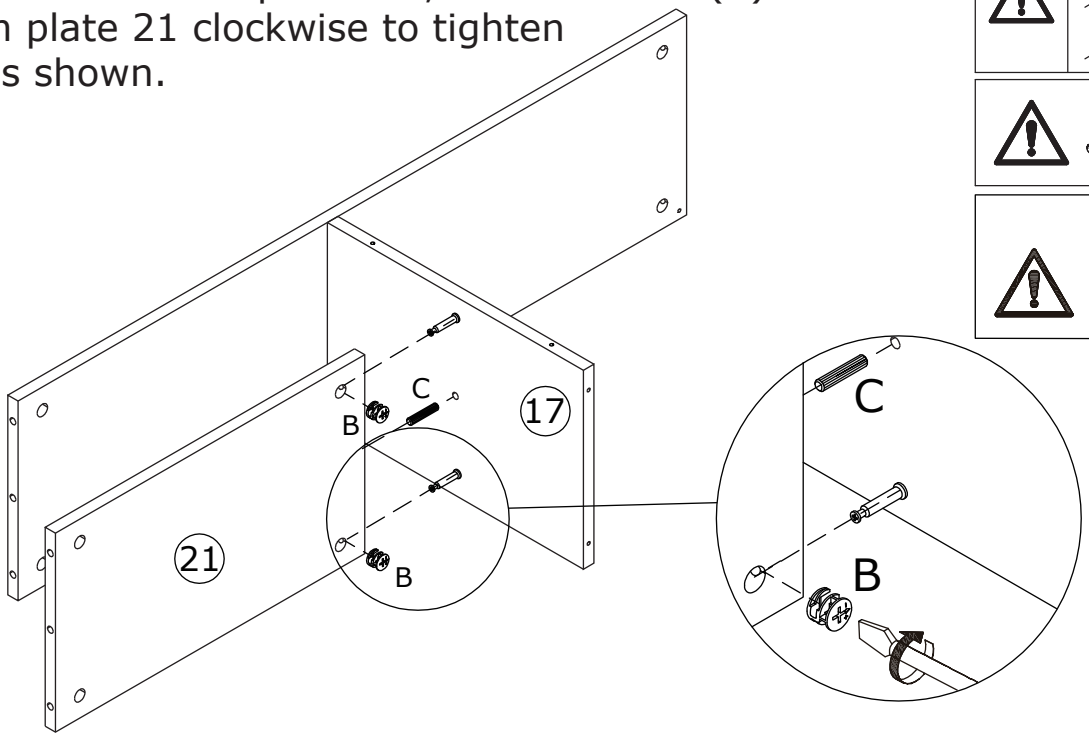

17

F x 2
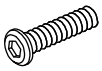
M6 x 20 mm

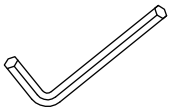

Fix tube 5 to plate 20 with screw(F) as shown.

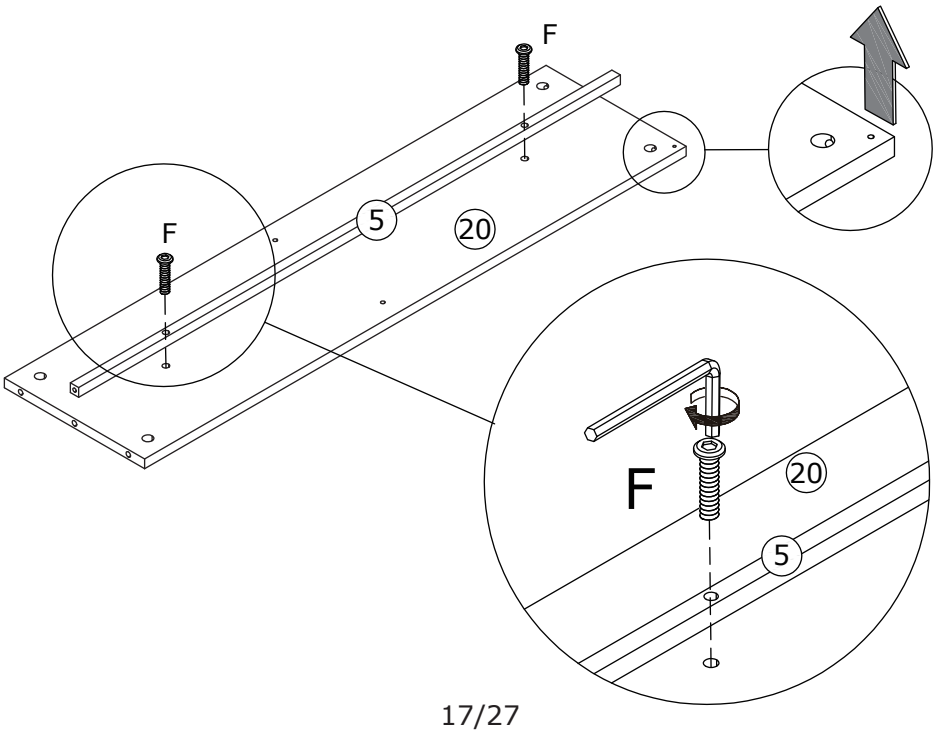

18

D x 2

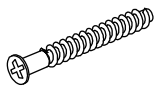

M5 x 40 mm

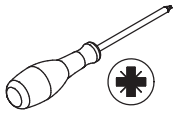

Fix plate 20 to plate 17 with screw(D) as shown.

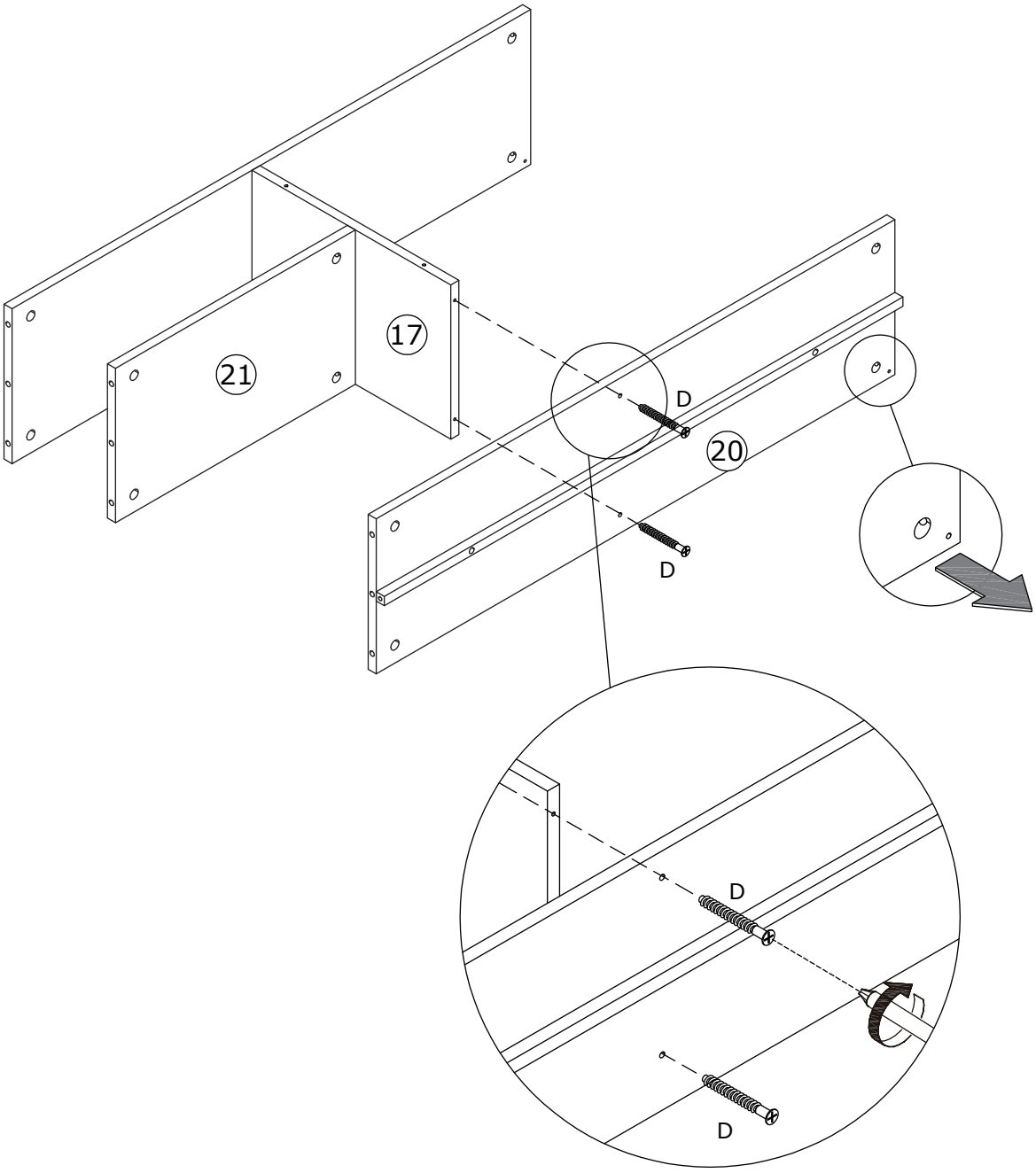

19

H x 8

M3.5 x 12 mm

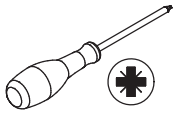

Fix plate 16 to iron stand 3 with screw(H) as shown.
Fix plate 18 to iron stand 4 with screw(H) as shown.

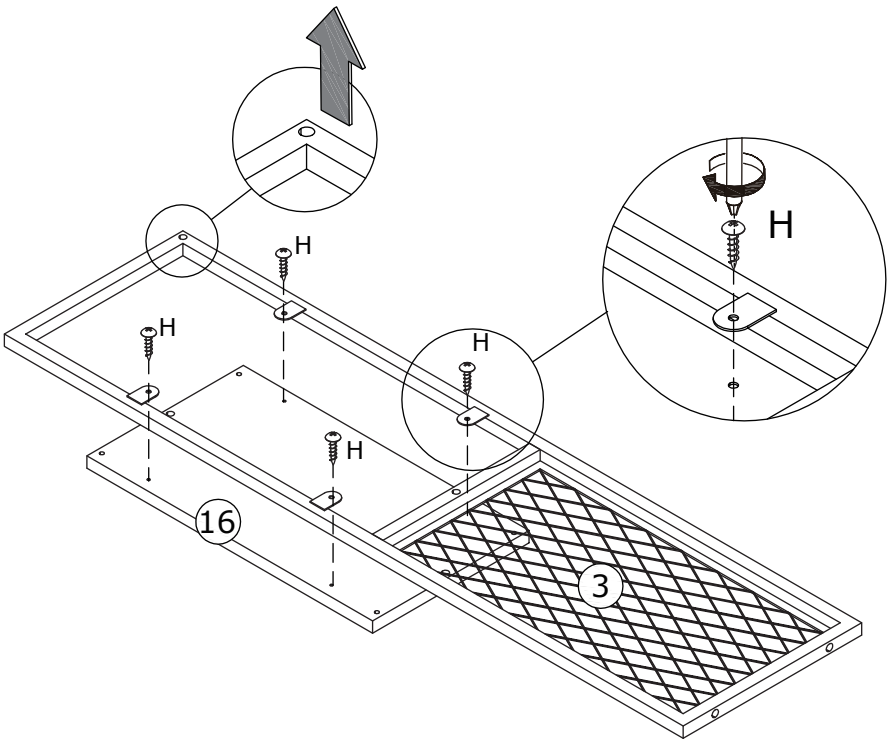

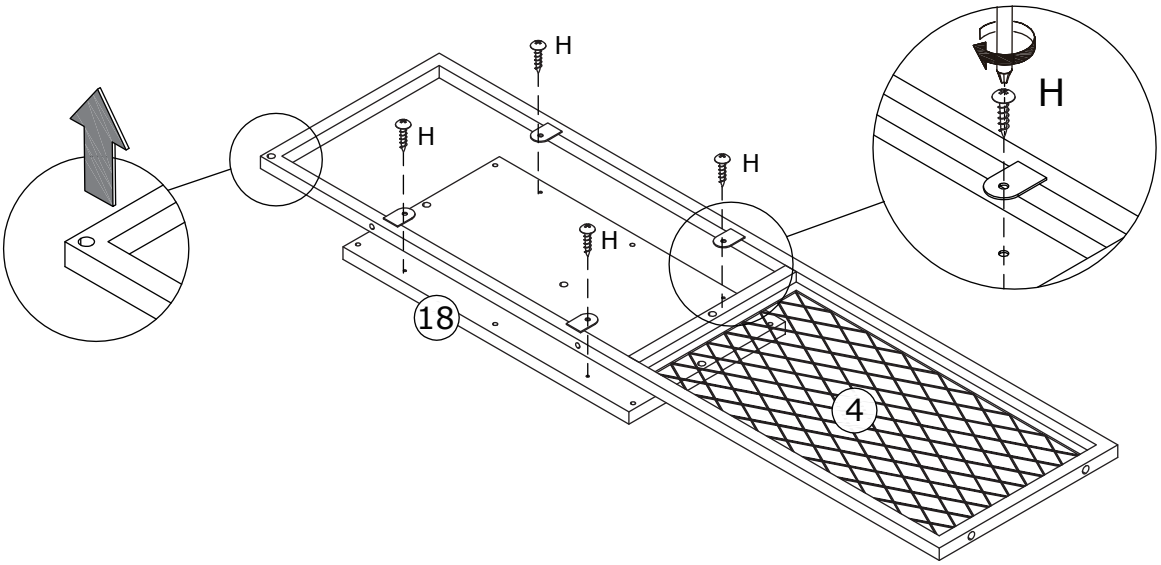

20

A x 10	B x 10	C x 5	G x 4
M6 x 40 mm	∅15 x 10 mm	∅6 x 30 mm	M6 x 35 mm

Insert quickfit screw(A) into plate 16 and 18 as shown.

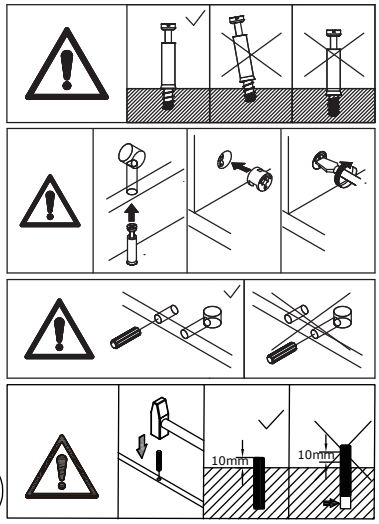

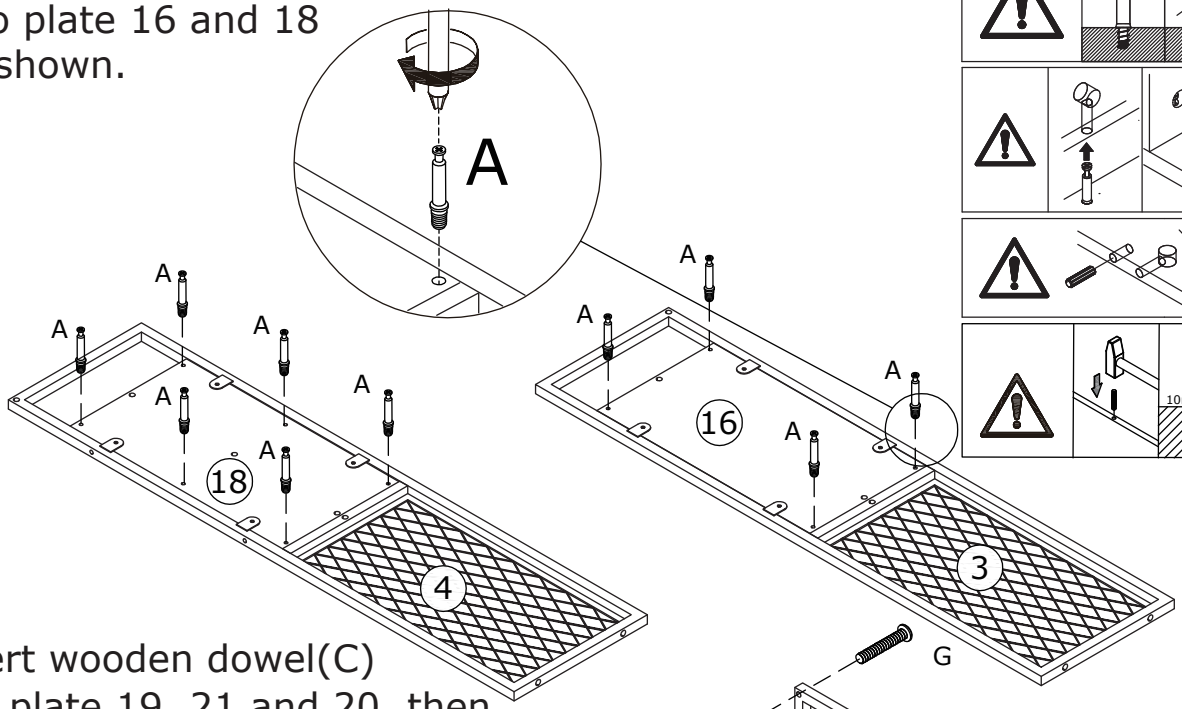

Insert wooden dowel(C) into plate 19, 21 and 20, then attach plate 16 and 18 , turn cam lock(B) in plate 19,21,20 clockwise to tighten as shown.

Fix iron stand 3 and 4 to tube 5 and 6 with screw(G) as shown.

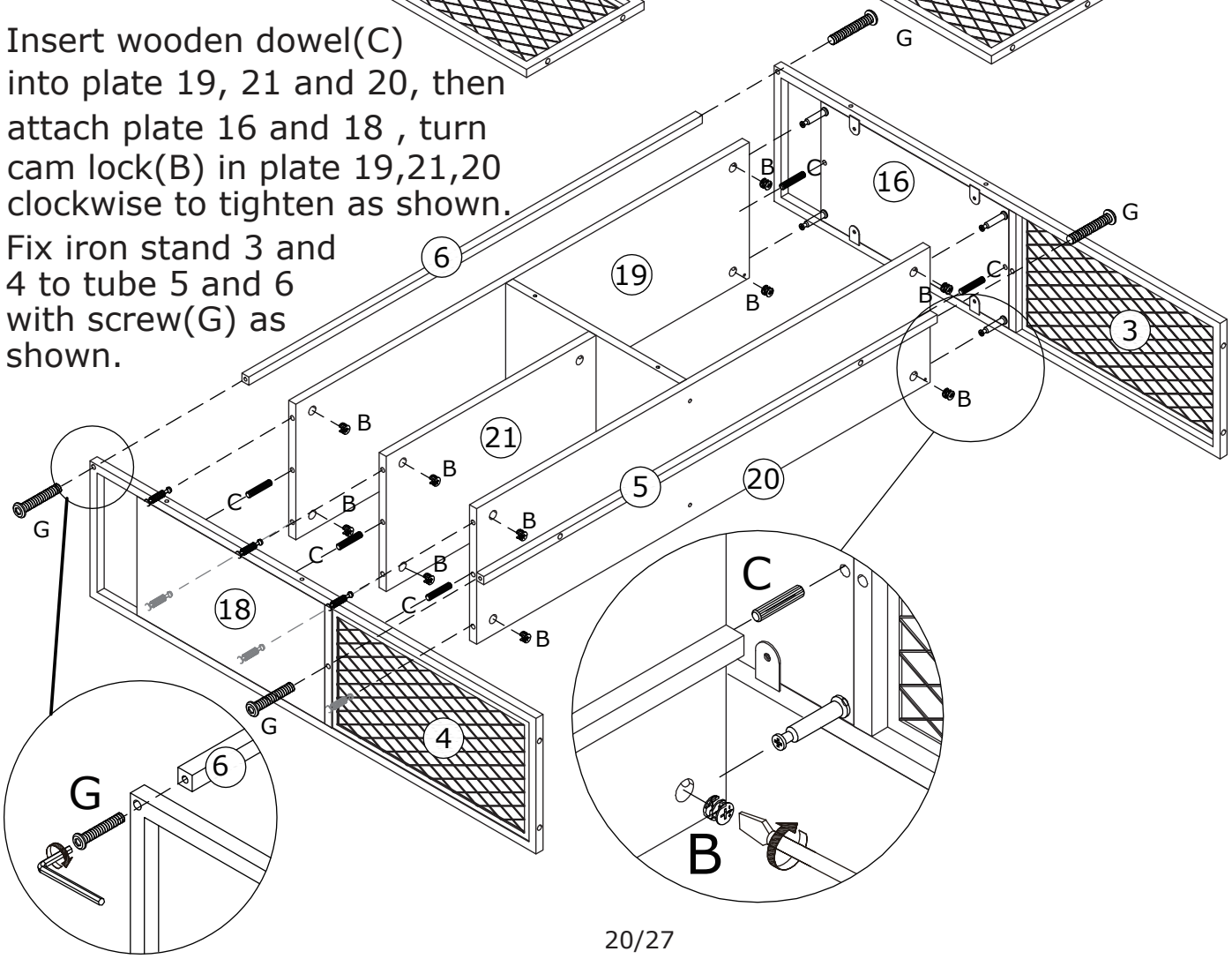

21

E x 4	Q x 2	
M6 x 12 mm	M3.5 x 12 mm	

	U	Q
	M3.5 x 14 mm	M3.5 x 12 mm

Fix back plate 29 to iron stand 3 and 4 with screw(E) as shown.
Fix plate 29 to plate 17 with screw(Q) as shown.

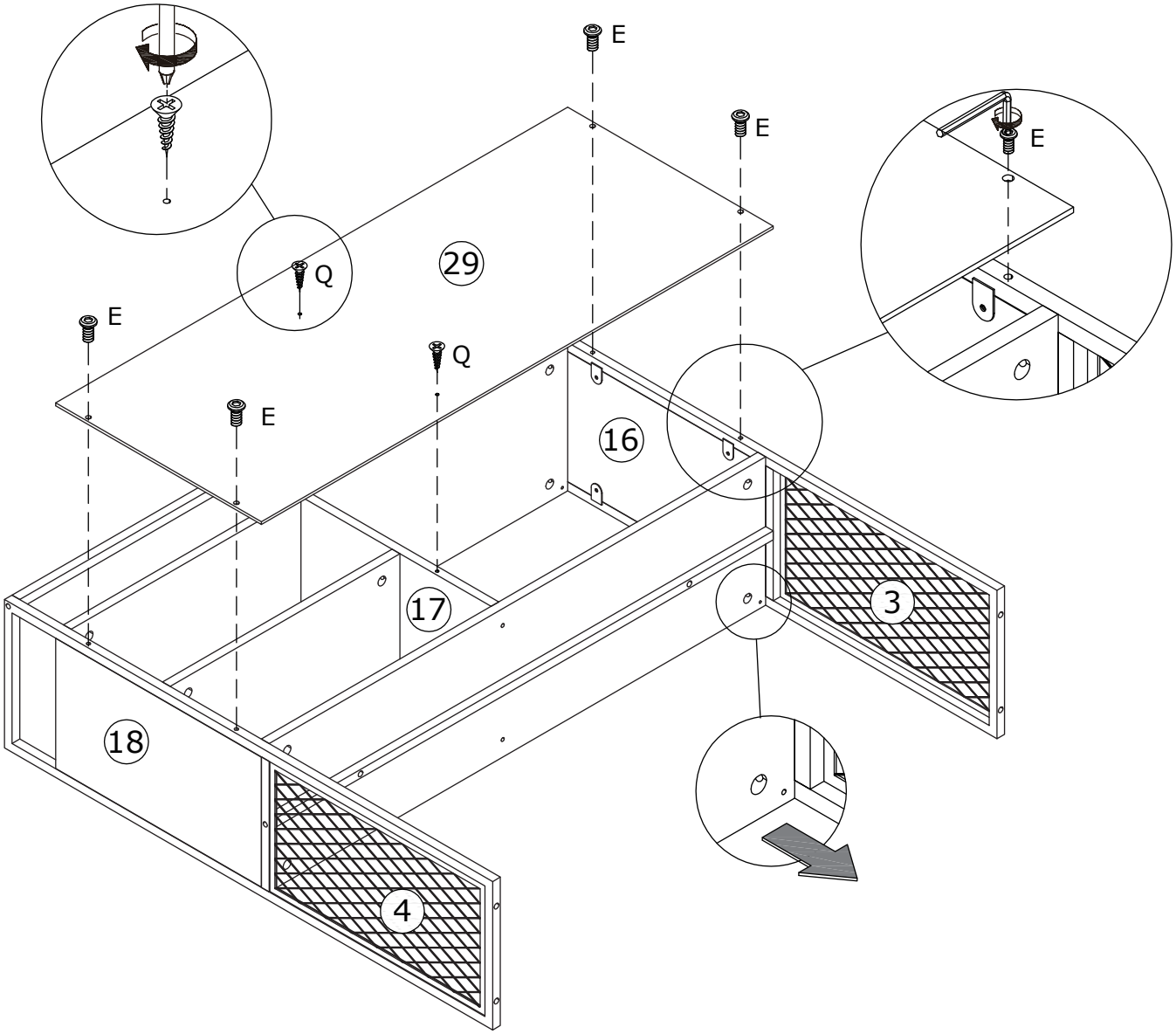

22

O x 12

∅1.5 x 15 mm

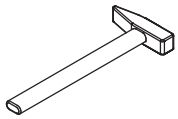

Fix back plate 29 with nail(O) as shown.

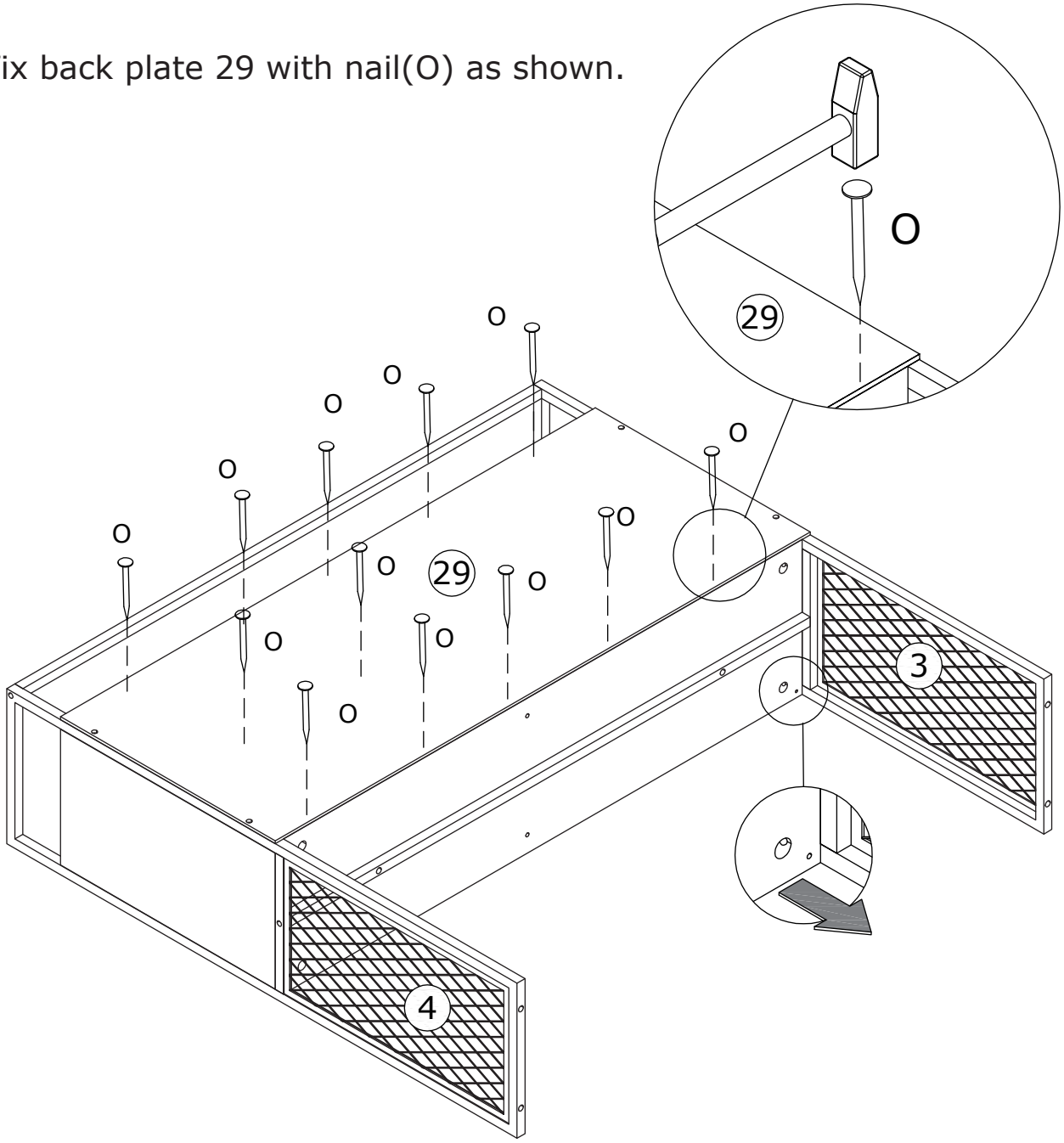

23

F x 4

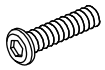

M6 x 20 mm

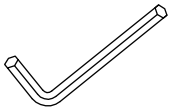

Connect the two assembled components with screw(F) as shown.

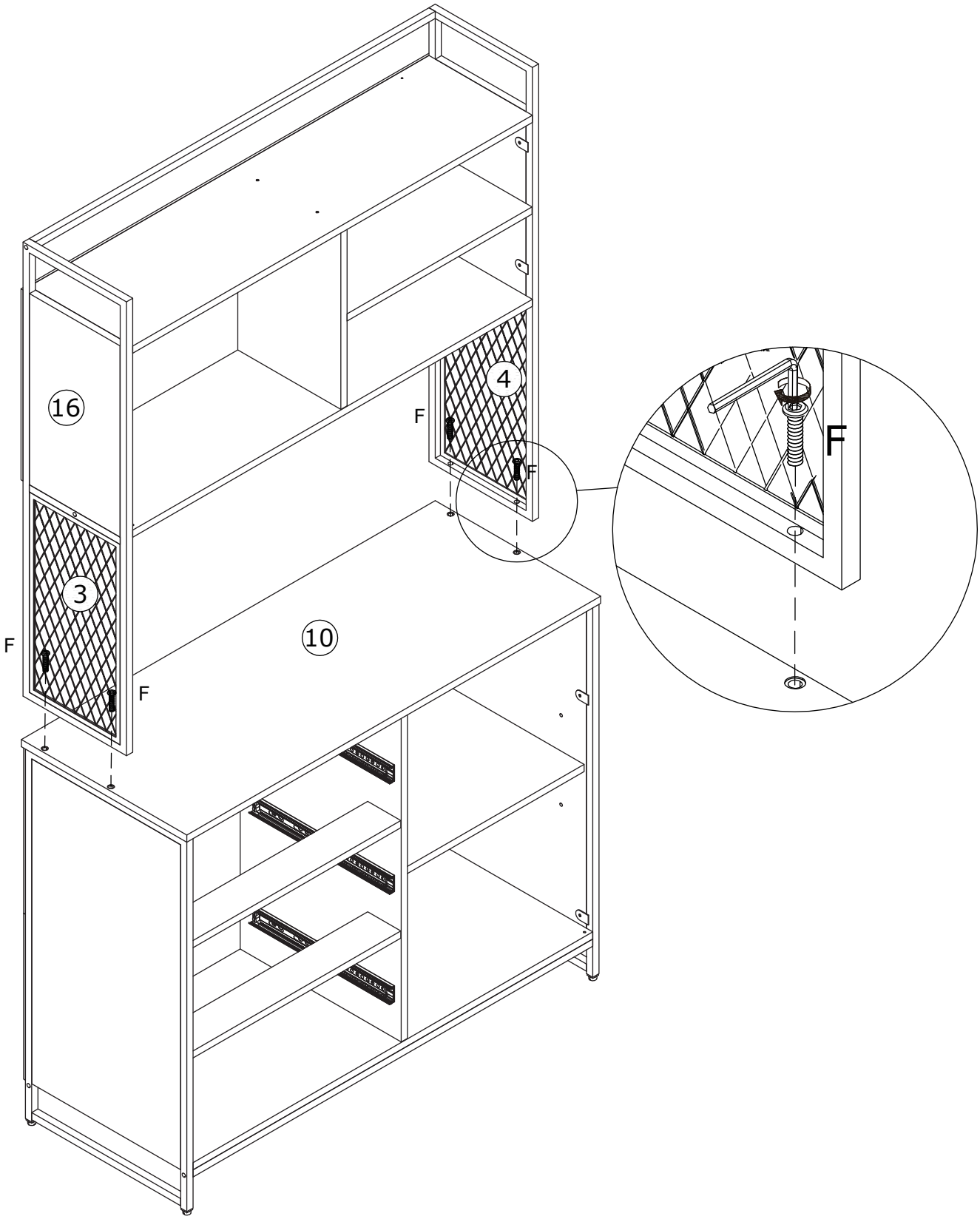

24

J x 2	K x 4	L x 4	
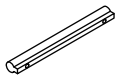			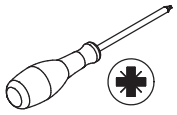
220-96	M4 x 18 mm		

Fix handle(J) to door plate 8 and 9 with screw(K) as shown.
Insert part(L) into plate 8 and 9, then attach to the cabinet.

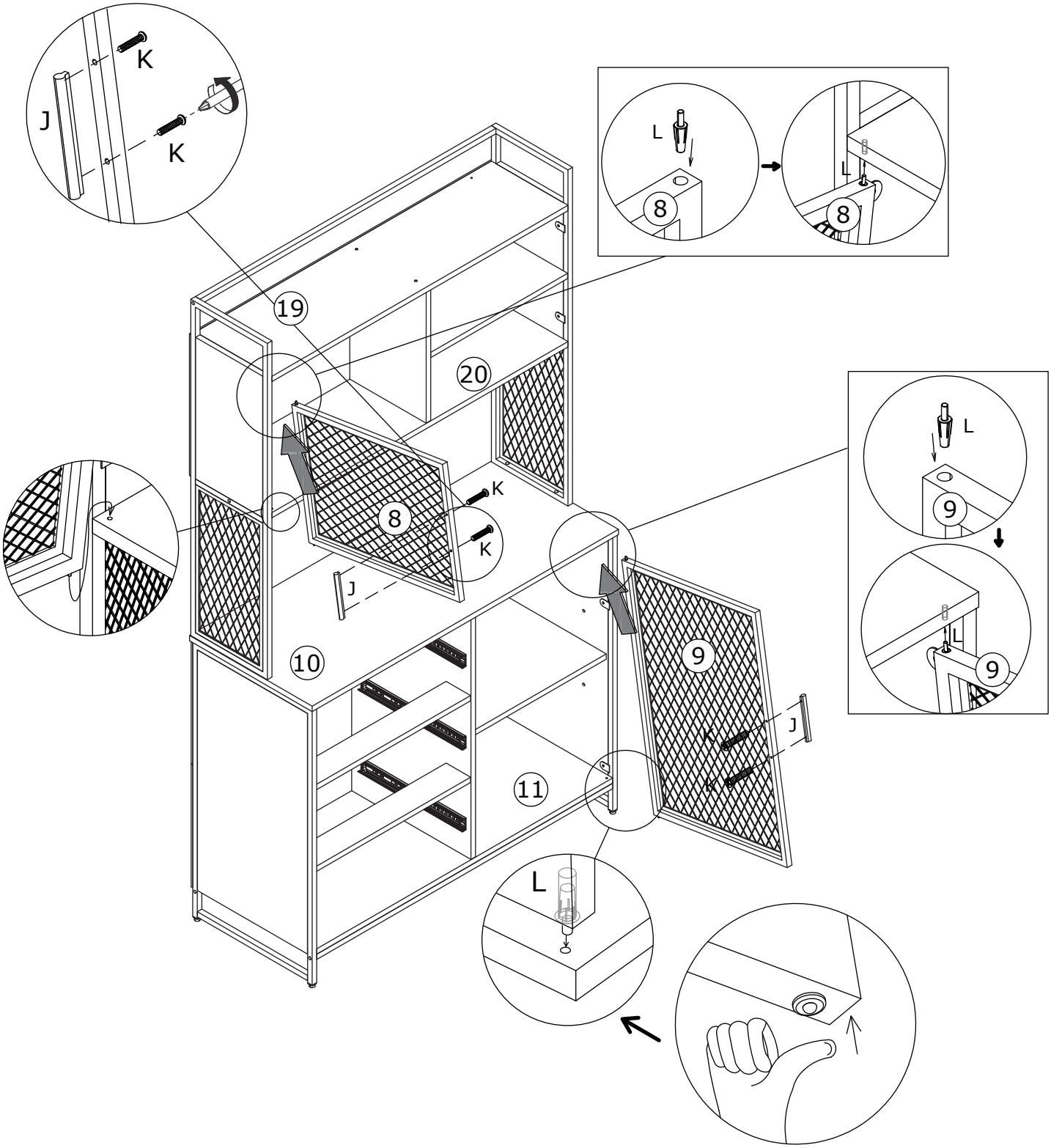

25

A x 12	B x 12	J x 3	T x 6	
M6 x 40 mm	∅15 x 10 mm	220-96	M4 x 15 mm	

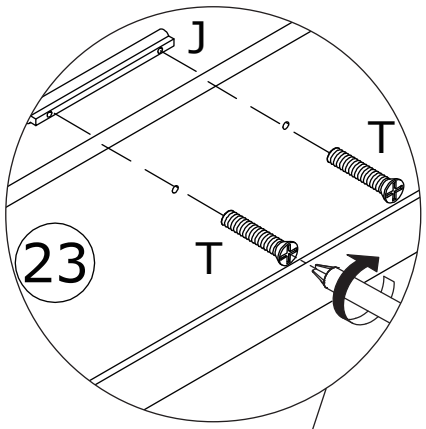

Insert quickfit screw(A) into plate 23, fix handle(J) with screw(T) as shown.

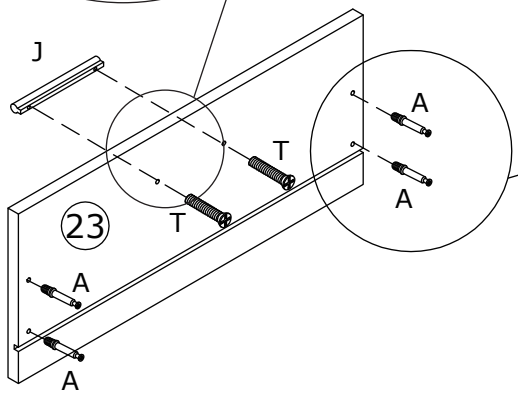

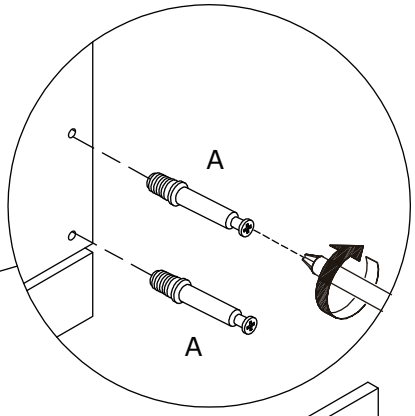

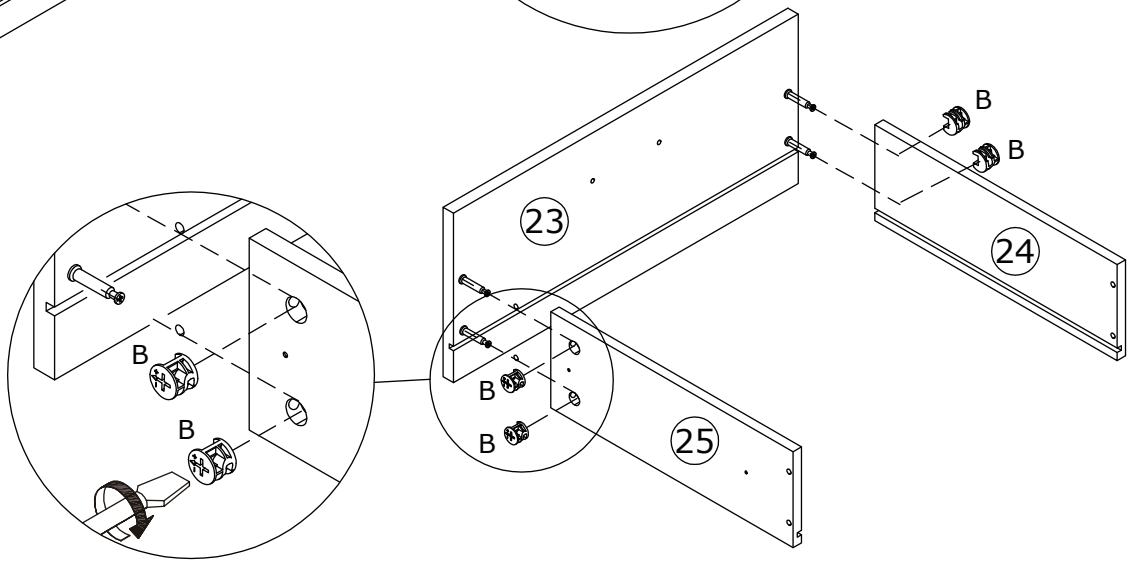

Attach plate 24 and 25 to plate 23, turn cam lock(B) clockwise to tighten as shown.

x3

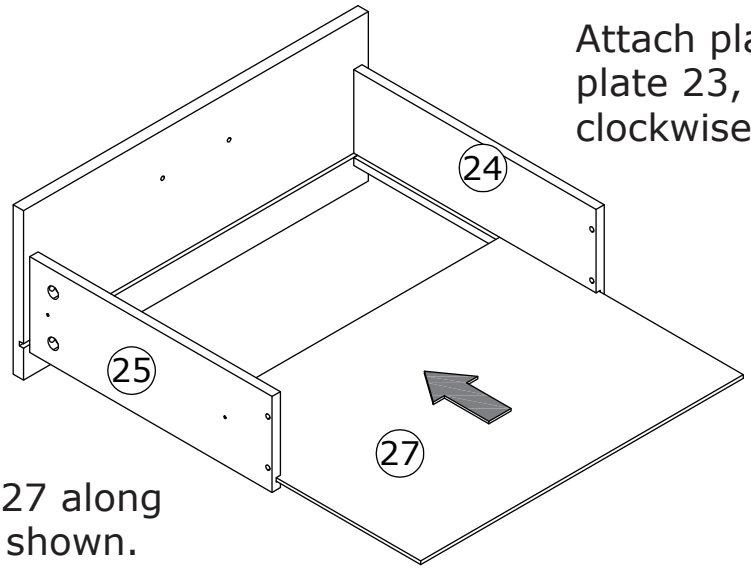

Slide plate 27 along grooves as shown.

26

D x 12

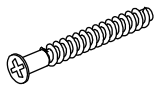

M5 x 40 mm

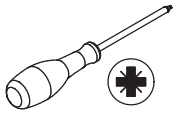

Fix plate 26 to plate 24 and 25 with screw(D) as shown.

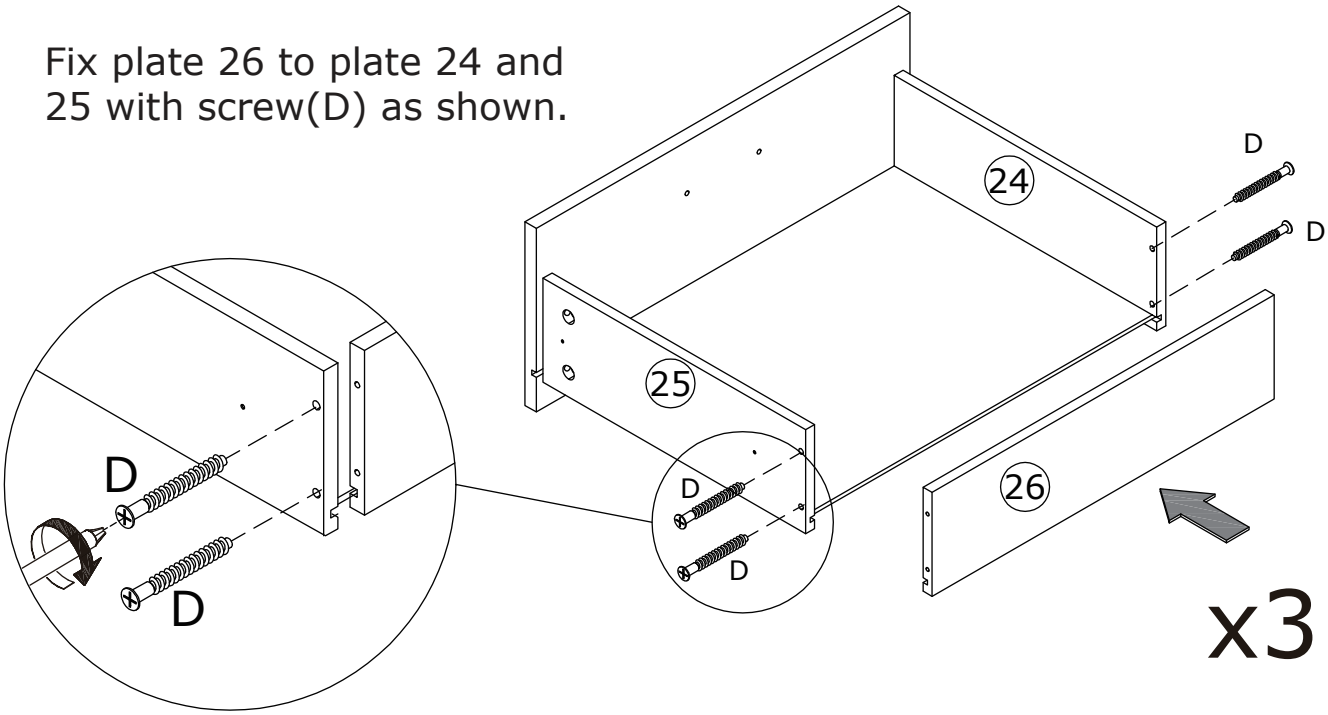

27

Q x 12

M3.5 x 12 mm

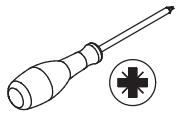

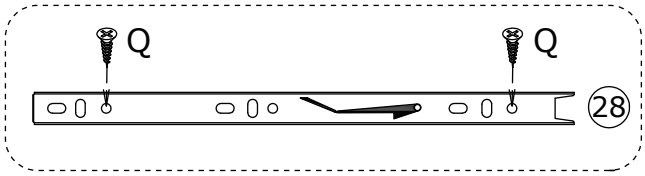

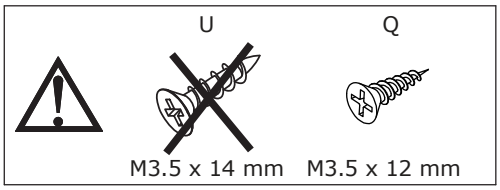

Fix runner 28 to plate 24 and 25 with screw(Q) as shown.

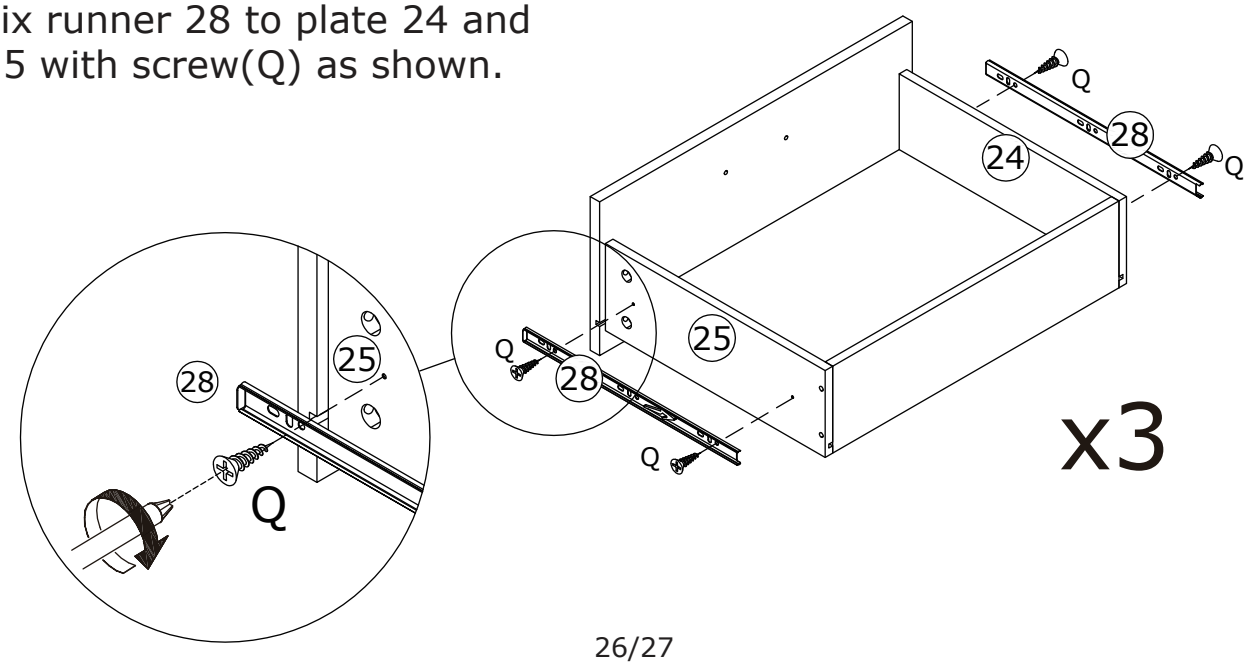

28

M x 2	N x 2	H x 2	R x 2	V x 2	
	∅8 x 35 mm	M3.5 x 12 mm	∅5 x 40 mm		

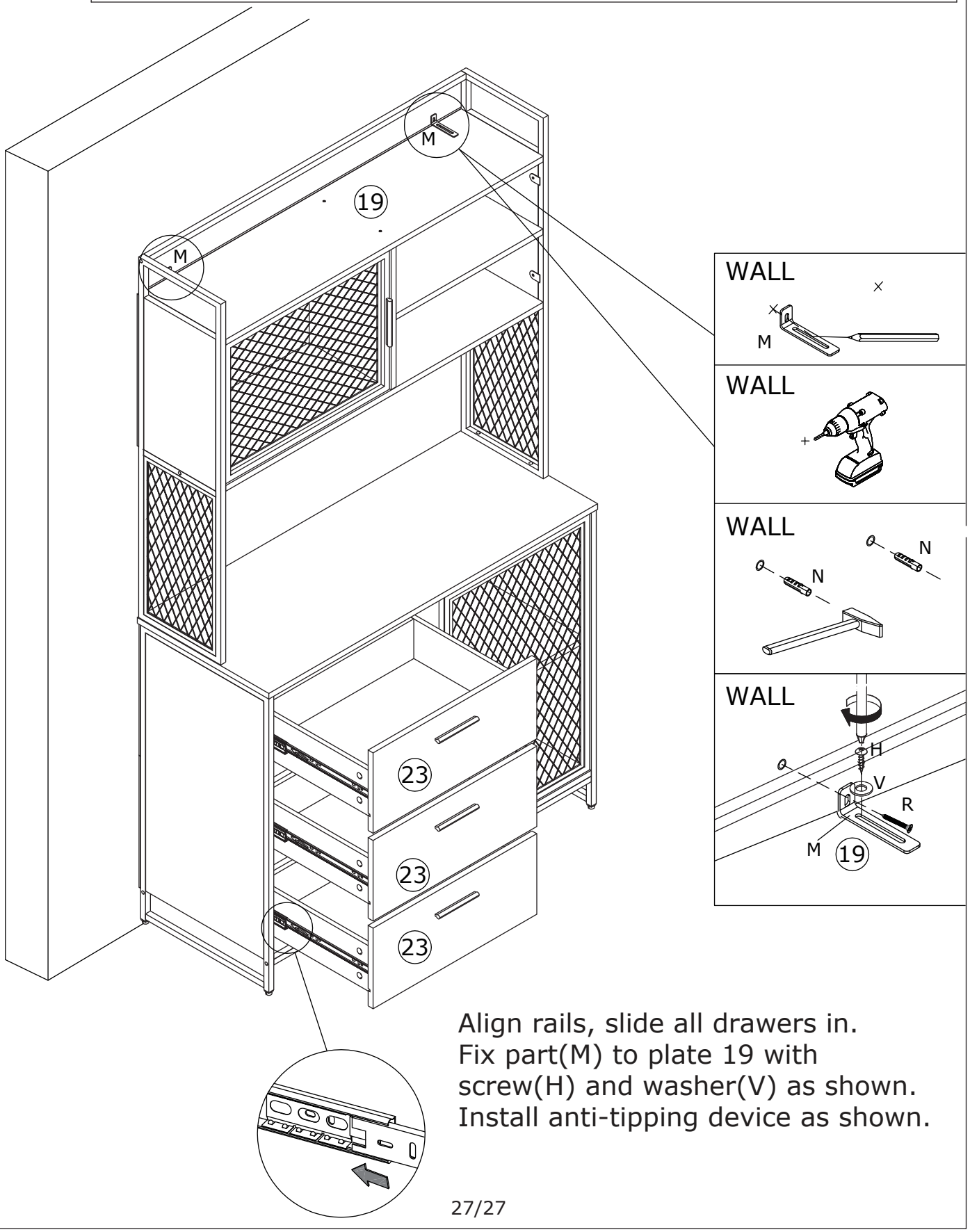

Align rails, slide all drawers in.
Fix part(M) to plate 19 with screw(H) and washer(V) as shown.
Install anti-tipping device as shown.

WARRANTY

WARRANTY CLAIMS

•There is a 30-day warranty for broken furniture or any other problems that do not work properly. The warranty will start from the date of purchase which must be verified by proof of purchase.

•Before making a claim, we may be able to answer your query, simply call us. Please leave your purchase order number, along with some details of the problem, if you want a replacement part. We will arrange within 48 hours. If there is out of stock, we will reply with a shipping date.

•The product must be used in accordance with the instructions provided. For health reasons.

•For other reasons, if the furniture needs to be returned, it must be cleaned and dried and operated within 30 days of receipt.

Type of Warranty Claim

•Failure to follow the furniture instructions will invalidate the warranty. Attention please.

•Does not include damage during installation, but includes damage during transportation.

Scope of responsibility

•Shall not bear any responsibility for misuse or user damage and / or loss of parts during the installation of furniture.

•After using, the damage and scratches of the furniture are not covered by the warranty.

The Warranty Relates to All Bought in The Us and Covers The Following Areas

•Sheet parts: 1 month from the date of purchase.

•Electrical parts: 1 month from the date of purchase.

RETURNS

CHANGED YOUR MIND AND NEED TO RETURN YOU ITEM?

PLEASE FOLLOW THE BELOW INSTRUCTIONS:

- If you have purchased and have simply changed your mind, follow the retailer's instructions for returns.

DEFECTIVE ITEMS

- If your item is defective in any way, i.e. it doesn't work but you can't identify why, in the first instance, please call us.

DAMAGED ITEMS

- If you receive an order with obvious shipping damage from the retailer, then we suggest the delivery is refused. If the delivery has been accepted and then shipping damage is found, please follow the specific instructions advised by the retailer.
  In all circumstances please save all packaging material and paperwork for the order. Please be aware that if you dispose of packaging material or attempt to return the merchandise without contacting the fulfiller, you jeopardise your chances of making a claim, and you may not receive a credit for the return.

AFTER-SALES CONTACT

feedbackstation@163.com

(303)800-6387