ITEM #807421/1059534/2599776/2807158
/807422
MODEL #MZ44BNK3LR/MZ44MBLK3LR/MZ44WW3LR/MZ44MBK3LR
/MZ44NWZ3LR

MAZON CEILING FAN

HARBOR BREEZE and logo design are trademarks or registered trademarks of LF, LLC. All rights reserved.

Español p. 18

ATTACH YOUR RECEIPT HERE

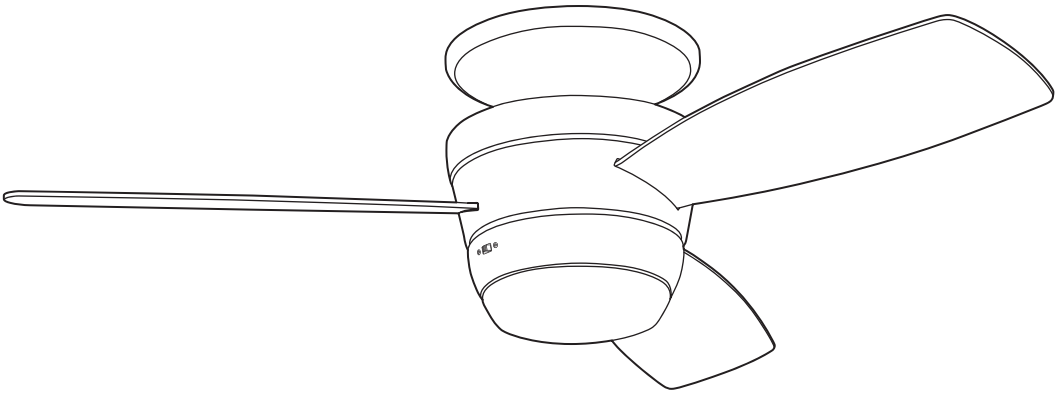

Intertek
4007498

Purchase Date _____

Thank you for purchasing this HARBOR BREEZE product.
Questions, problems, missing parts?
Before returning, contact us on:
888-251-1003, 8 a.m-8 p.m., EST, Monday-Sunday.

TABLE OF CONTENTS

Safety Information 2

Package Contents 5

Hardware Contents 6

Preparation 6

Initial Installation 6

Wiring 9

Final Installation 10

Operating Instructions 13

Care and Maintenance 15

Troubleshooting 16

Limited Lifetime Warranty 17

Replacement Parts List 17

SAFETY INFORMATION

CAUTION: Changes or modifications not approved by the party responsible for compliance could void the user's authority to operate the equipment.

*NOTE: This equipment has been tested and found to comply with the limits for a Class B digital device, pursuant to Part 15 of the FCC Rules. These limits are designed to provide reasonable protection against harmful interference in a residential installation. This equipment generates, uses and can radiate radio frequency energy and, if not installed and used in accordance with the instructions, may cause harmful interference to radio communications. However, there is no guarantee that interference will not occur in a particular installation. If this equipment does cause harmful interference to radio or television reception, which can be determined by turning the equipment off and on, the user is encouraged to try to correct the interference by one or more of the following measures:

* Reorient or relocate the receiving antenna.
* Increase the separation between the equipment and receiver.
* Connect the equipment into an outlet on a circuit different from that to which the receiver is connected.

Consult the dealer or an experienced radio/TV technician for help.

Distributed by: Litex Industries Inc., P.O. Box 535639, Grand Prairie, TX, 75053; 800-527-1292

The device complies with Part 15 of the FCC Rules. Operation is subject to the following two conditions: (1) this device may not cause harmful interference, (2) this device must accept any interference received, including interference that may cause undesired operation.

NOTE: Dimmable to 10%.

SAFETY INFORMATION

READ AND SAVE THESE INSTRUCTIONS

Please read and understand this entire manual before attempting to assemble, install or operate the product. Review the accompanying assembly diagrams.

- Do not discard fan carton or packing material. Should this fan need to be returned to the factory for repairs, it must be shipped in its original packaging to ensure proper protection against damage that might exceed the initial cause for return.
- Make sure all electrical connections comply with local codes, ordinances, the National Electrical Code and ANSI/NFPA 70-1999. Hire a qualified electrician or consult a do-it-yourself wiring handbook if you are unfamiliar with installing electrical wiring.
- Make sure the installation site you choose allows a minimum clearance of 7 ft. from the blades to the floor and at least 30 in. from the end of the blades to any obstruction.
- After you install the fan, make sure all connections are secure to prevent the fan from falling.
- The net weight of this fan including the light kit is: 14.57 lbs.

⚠ DANGER

When using an existing outlet box, make sure the outlet box is securely attached to the building structure and can support the full weight of the fan. Failure to do this can result in serious injury or death. The stability of the outlet box is essential in minimizing wobble and noise in the fan after installation is complete.

To reduce the risk of serious bodily injury, DO NOT use power tools to assemble any part of the fan, including the blades.

Before installation, be sure to shut off electricity at main switch or circuit breaker in order to avoid electrical shock.

⚠ WARNING

To reduce the risk of fire, electrical shock or personal injury, mount fan to outlet box marked "ACCEPTABLE FOR FAN SUPPORT OF 35 LBS. (15.9 KG) OR LESS" and use mounting screws provided with the outlet box. Most outlet boxes commonly used for the support of lighting fixtures are not acceptable for fan support and may need to be replaced. Consult a qualified electrician if in doubt.

When mounting fan to a ceiling outlet box, use a METAL octagonal outlet box; do NOT use a plastic outlet box. Secure the outlet box directly to the building structure. The outlet box and its support must be able to support the moving weight of the fan (at least 35 lbs.).

To avoid personal injury, the use of gloves may be necessary while handling fan parts with sharp edges.

SAFETY INFORMATION

⚠ WARNING

To reduce the risk of fire, electrical shock or personal injury, wire connectors provided with this fan are designed to accept only one 12-gauge house wire and two lead wires from the fan. If your house wire is larger than 12-gauge or there is more than one house wire to connect to the corresponding fan lead wires, consult an electrician for the proper size wire connectors to use.

To reduce the risk of fire or electrical shock, do not use the fan with any solid state speed control device or control fan speed with a full range dimmer switch.

To reduce the risk of fire, electrical shock or personal injury, do not bend the blades when installing or balancing them, or cleaning the fan. Do not insert objects between the rotating fan blades.

To reduce the risk of personal injury, use ONLY parts provided with this fan. The use of parts OTHER than those provided with this fan will void the warranty.

⚠ CAUTION

Be sure outlet box is properly grounded and that a ground wire (green or bare) is present.

Once installation is complete, carefully check all screws, bolts and nuts on fan motor assembly to ensure that they are secured.

Do NOT tamper with or attempt to repair LED component. The light source is designed for this specific application and should not be serviced by untrained personnel. If any servicing is required, call our customer service department.

PACKAGE CONTENTS

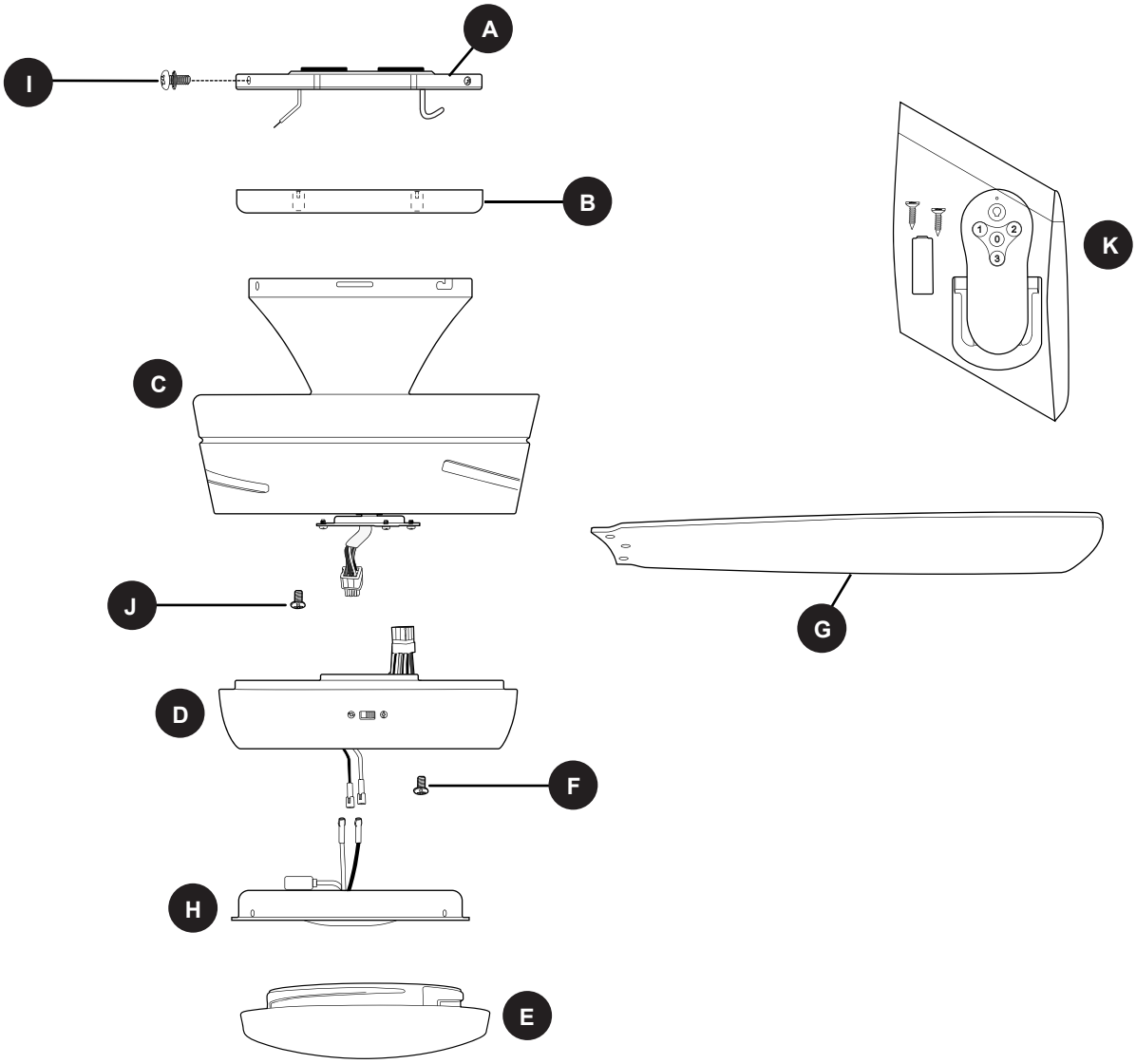

PART	DESCRIPTION	QUANTITY
A	Mounting Plate	1
B	Canopy Ring	1
C	Motor Assembly	1
D	Fitter Plate	1
E	Shade	1
F	Fitter Plate Screw (preassembled)	3
G	Blade	3

PART	DESCRIPTION	QUANTITY
H	LED Light Kit	1
I	Mounting Plate Screw /Lock Washer (preassembled)	4
J	Motor Plate Screw (preassembled)	3
K	Remote Pack	1

⚠ **IMPORTANT REMINDER**: You must use the parts provided with this fan for proper installation and safety.

HARDWARE CONTENTS (shown actual size)

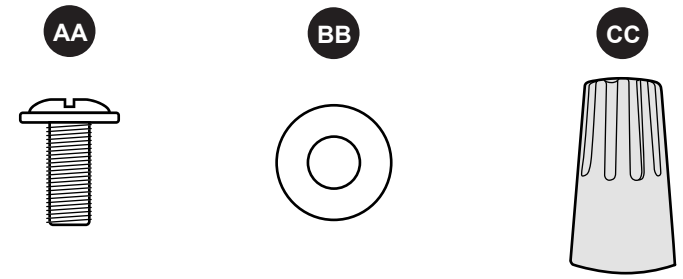

Blade Screw	Fiber Blade Washer	Wire Connector
Qty. 9 + 1 extra	Qty. 9 + 1 extra	Qty. 3 + 1 extra

PREPARATION

Before beginning assembly of product, make sure all parts are present. Compare parts with package contents list and hardware contents list. If any part is missing or damaged, do not attempt to assemble the product.

Estimated Assembly Time: 120 minutes

Tools Required for Assembly (not included): Electrical Tape, Phillips Screwdriver, Pliers, Safety Glasses, Stepladder and Wire Strippers

Helpful Tools (not included): AC Tester Light, Tape Measure, Do-It-Yourself-Wiring Handbook and Wire Cutters

INITIAL INSTALLATION

1. Turn off circuit breakers and wall switch to the fan supply line leads.

   ⚠ **DANGER:** Failure to disconnect power supply prior to installation may result in serious injury or death.

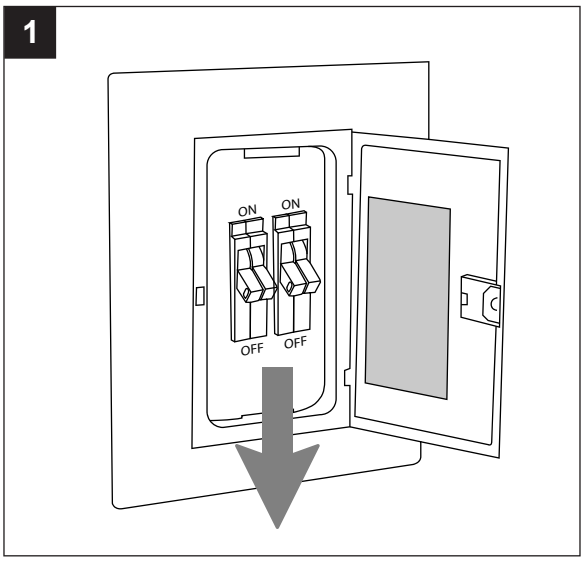

2. This fan can be mounted as a ***flushmount*** on a regular (no-slope) ceiling only.

   Check to make sure blades (G) will be at least 7 ft. above the floor and that the ends of the blades (G) will be at least 30 inches from any obstruction.

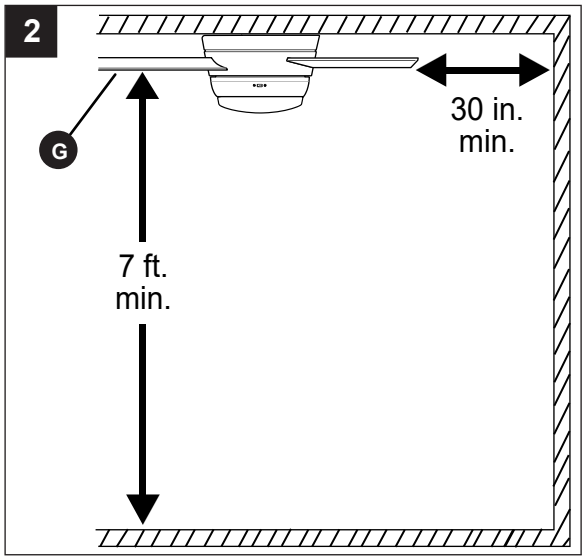

3. Remove all three preassembled motor stabilization pieces from motor assembly (C). The motor stabilization pieces may be discarded at this time.

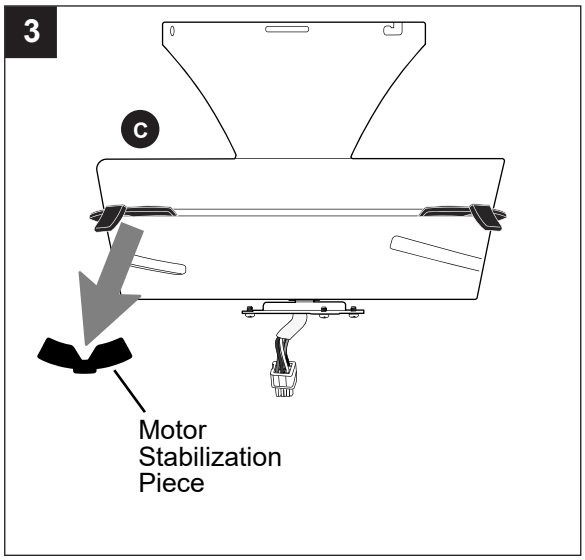

4. Secure mounting plate (A) to outlet box using screws, spring washers, and flat washers provided with the outlet box.

   ***NOTE:** It is very important you use the proper hardware when installing the mounting plate (A) as this will support the fan.

   Pull electrical wiring from outlet box through center hole in the mounting plate (A).

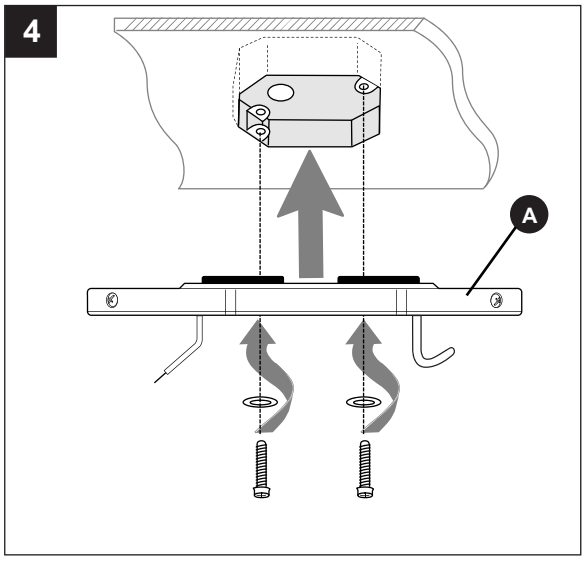

5. Locate mounting plate screw/lock washer (I) on outer edge of mounting plate (A) that is closest to the j-hook and remove that mounting plate screw/lock washer (I). Also, remove mounting plate screw/lock washer (I) on outer edge of mounting plate (A) directly opposite the one that was just removed. Partially loosen the other two mounting plate screws/lock washers (I).

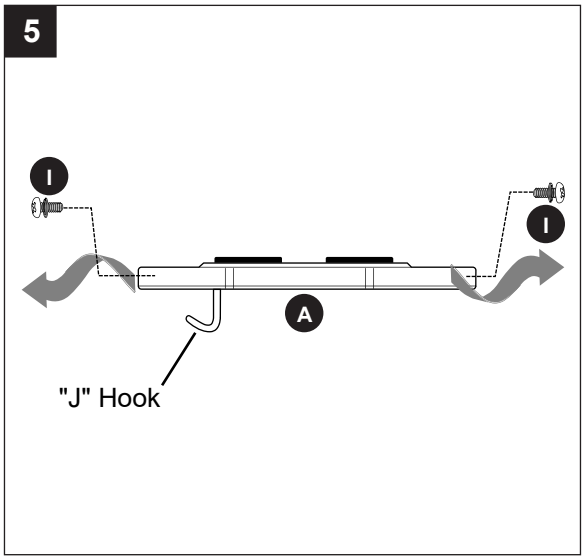

6. With wider opening facing up, place canopy ring (B) over TOP of motor assembly (C). Allow canopy ring (B) to rest on top of motor for the time being.

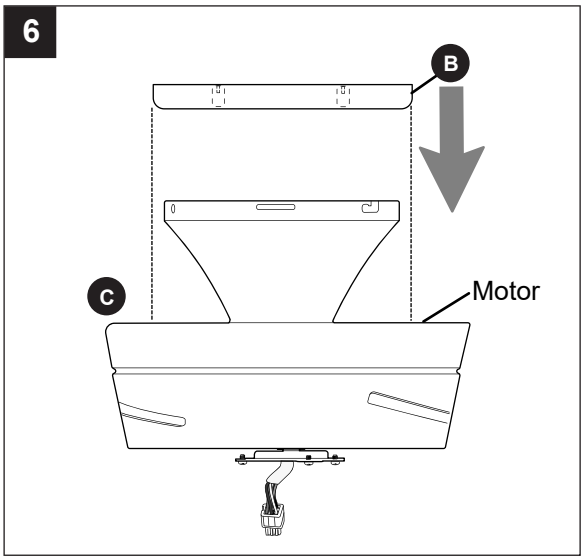

7. Lift motor assembly (C) to mounting plate (A). Hang motor assembly (C) on j-hook on underside of mounting plate (A). [**IMPORTANT:** Use one of the non-slotted holes on the rim of the motor assembly (C) to do so.]

   This will allow motor assembly (C) to hang out of the way while wiring.

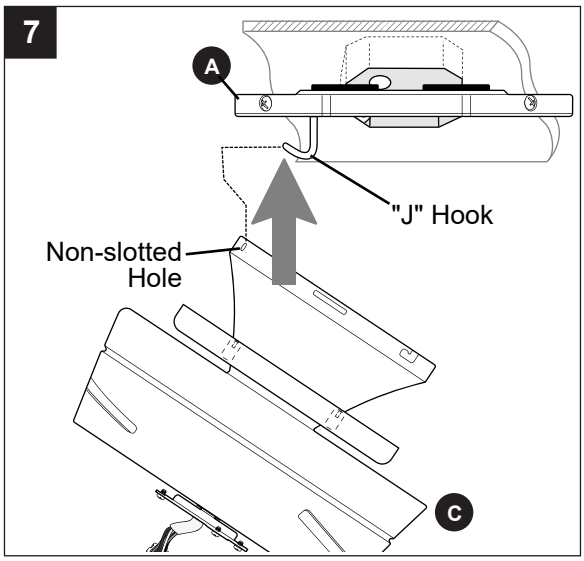

WIRING

WARNING: To reduce the risk of fire, electrical shock, or personal injury, wire connectors provided with this fan are designed to accept only one 12-gauge house wire and two lead wires from the fan. If your house wire is larger than 12-gauge or there is more than one house wire to connect to the corresponding fan lead wires, consult an electrician for the proper size wire connectors to use.

CAUTION: Be sure outlet box is properly grounded and that a ground (green or bare) wire is present.

WARNING: The wires from the outlet box must be connected to a corresponding color of the fan's wires. Be sure wire colors match before making connections. If house wires are different colors than referred to in the following steps, stop immediately. A professional electrician is recommended to determine wiring.

WARNING: Using a full range dimmer switch (not included) to control fan speed will cause a loud humming noise from fan. To reduce the risk of fire or electrical shock, do NOT use a full range dimmer switch to control fan speed.

1. **IMPORTANT:** For each wire connection below, use one of the wire connectors (CC) provided, making sure to turn wire connector (CC) in a clockwise direction.

   Connect all GROUND (GREEN) wires together from fan (on motor assembly (C) and mounting plate (A)) to BARE/GREEN wire from ceiling.
   Connect BLACK wire from fan to BLACK wire from ceiling.
   Connect WHITE wire from fan to WHITE wire from ceiling.

   NOTE: BLACK wire is hot power for fan. BLUE wire is hot power for light kit. WHITE wire is common for fan and light kit. GREEN or BARE wire is GROUND.

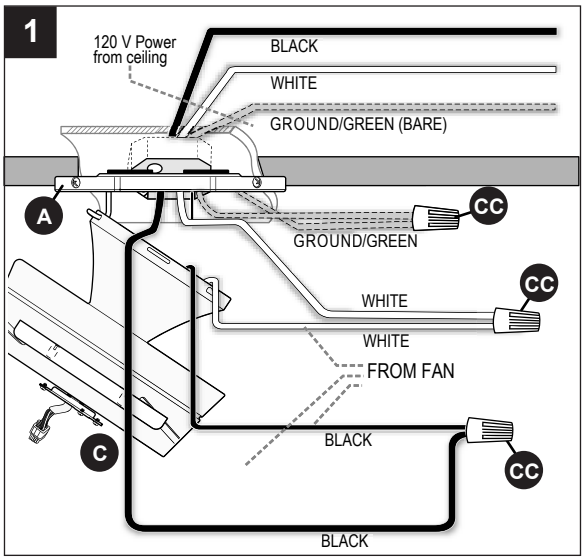

Hardware Used

CC Wire Connector 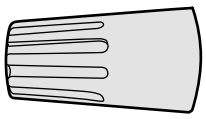 x 3

WIRING

2. Wrap electrical tape around each individual wire connector (CC) down to the wire.

   ⚠ **WARNING:** Make sure no bare wire or wire strands are visible after making connections. Place green and white connections on opposite side of box from the black and blue (if applicable) connections.

   Turn spliced/taped wires upward and gently push wires and wire connectors (CC) into outlet box.

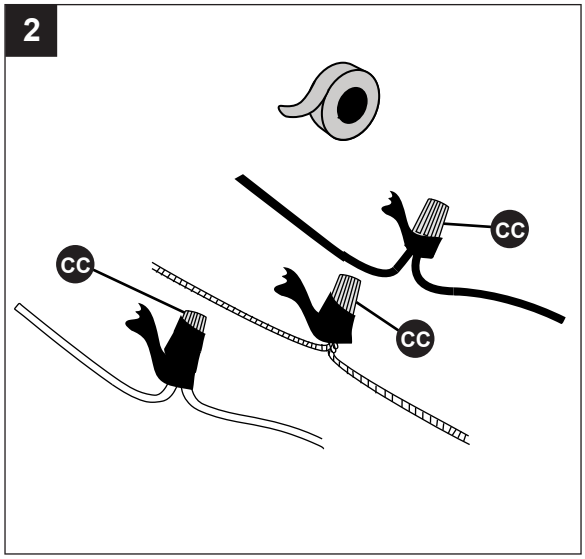

FINAL INSTALLATION

1. Remove motor assembly (C) from "J" hook and slide top of motor assembly (C) over mounting plate (A), aligning slotted holes in motor assembly (C) with loosened mounting plate screws/lock washers (I) in mounting plate (A). Twist motor assembly (C) to lock. Re-insert the other two mounting plate screws/lock washers (I) previously removed (Step 5, page 8) to attach motor assembly (C). Tighten all mounting plate screws/lock washers (I) securely.

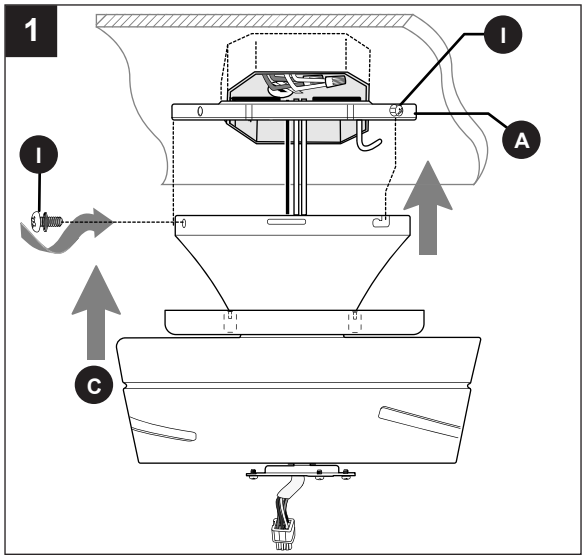

2. Locate four tabs inside canopy ring (B). Align tabs in canopy ring (B) with four grooves at top of motor assembly (C) and raise canopy (B) until you hear tabs snap into grooves.
   NOTE: Canopy ring (B) should fit flush to ceiling when done correctly.

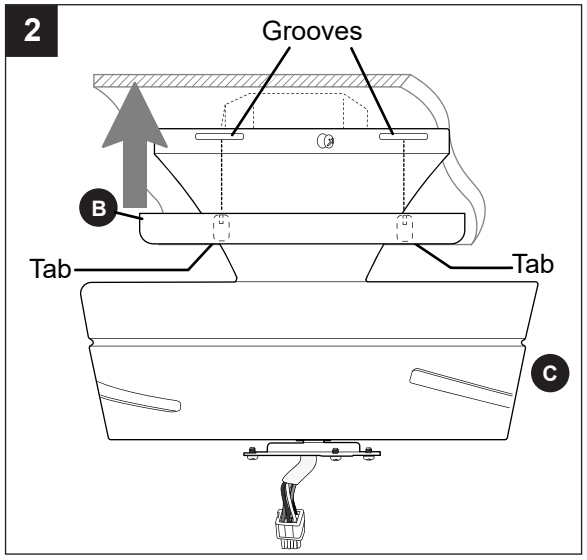

3. ⚠ **DANGER:** To reduce the risk of serious bodily injury, DO NOT use power tools to assemble the blades (G). If screws are overtightened, blades (G) may crack and break.

   Insert the blade (G) through the slot on the band of the motor assembly (C). Align holes in blade (G) with holes in plate on underside of motor. Attach the blade (G) with blade screws (AA) and fiber blade washers (BB). Then, tighten each blade screw (AA), starting with the one in the middle. Repeat for remaining blades (G).

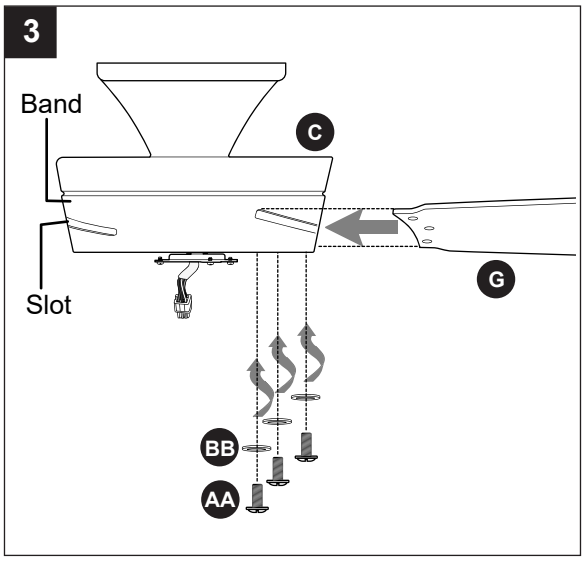

Hardware Used

AA	Blade Screw	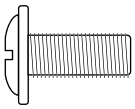	x 9
BB	Fiber Blade Washer	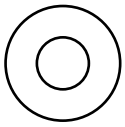	x 9

4. Remove one motor plate screw (J) from motor plate preassembled on the underside of the motor assembly (C) and partially loosen the other two motor plate screws (J). Align slotted holes in fitter plate (D) with loosened motor plate screws (J), allowing male plug from motor assembly (C) to come through hole in fitter plate (D). Twist fitter plate (D) to lock. Re-insert the motor plate screw (J) that was removed and securely tighten all three motor plate screws (J).

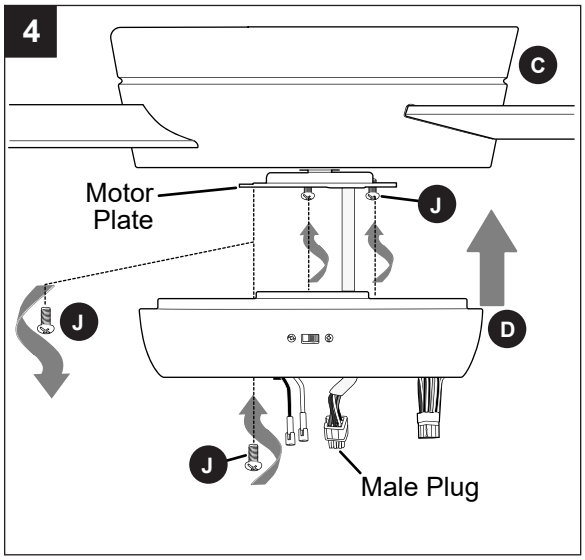

5. Remove one fitter plate screw (F) from fitter plate (D) and partially loosen the other two fitter plate screws (F).

   Connect male plug from motor assembly (C) to female plug from fitter plate (D), matching up the colors on the plugs for correct fit. Make sure plugs connect tightly.

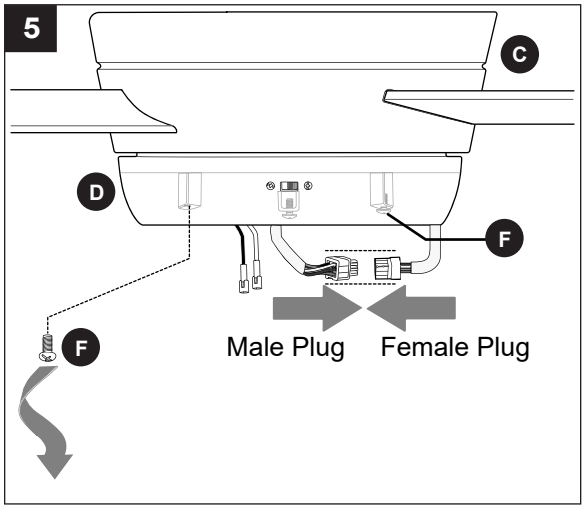

FINAL INSTALLATION

6. Locate BLUE and WHITE wires in fitter plate (D). Connect WHITE wire from LED light kit (H) to WHITE wire from fitter plate (D). Connect BLUE wire from LED light kit (H) to BLUE wire from fitter plate (D). Make sure molex connections are secure.

   Carefully arrange wires inside fitter plate (D). Align slotted holes in LED light kit (H) with loosened screws in fitter plate (D). Re-insert fitter plate screw (F) previously removed. Tighten all three fitter plate screws (F) securely.

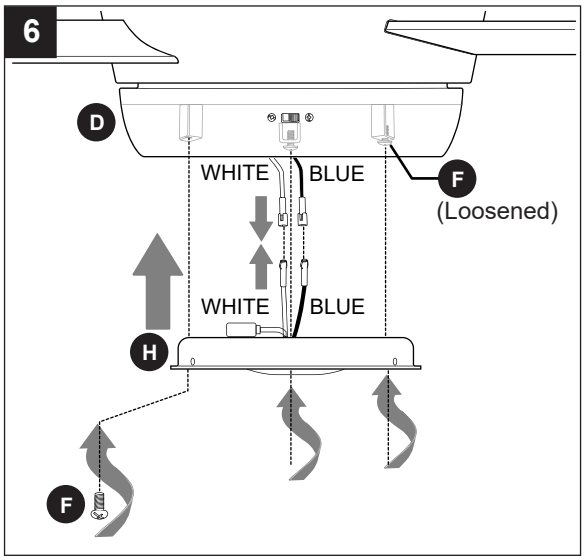

7. Align slots on shade (E) with protrusions on the inside of the LED light kit (H). Turn shade (E) to the right (clockwise) until it no longer turns. **NOTE:** Pull down ***gently*** on the shade (E) to make sure that it is secured completely.

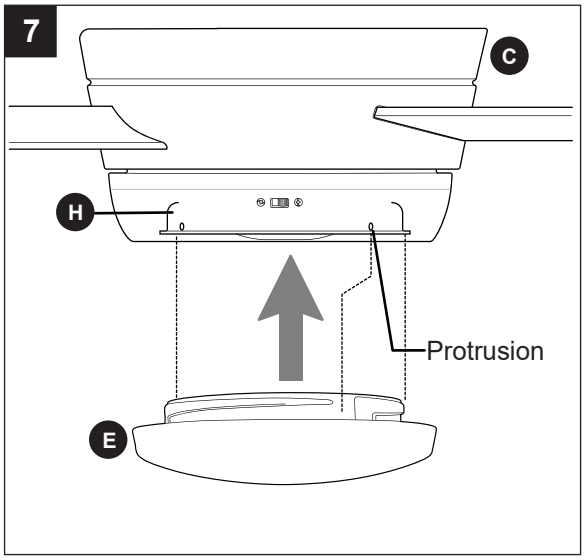

8. If you wish to use the remote control bracket from remote pack (K), install screws from remote pack (K) through bracket and into the desired installation site. The remote control transmitter from remote pack (K) rests inside the bracket.

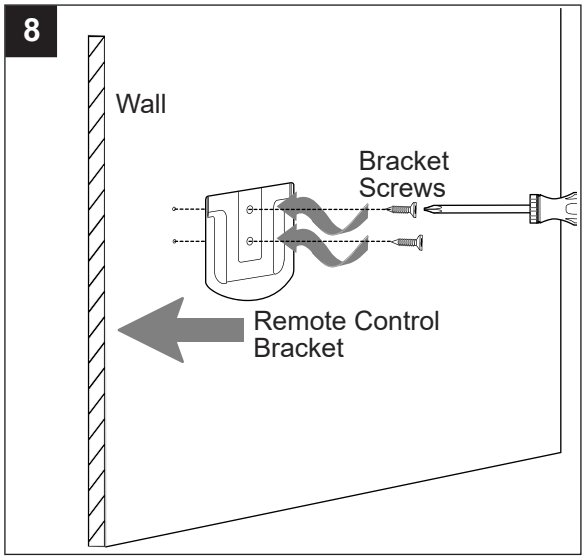

OPERATING INSTRUCTIONS

⚠ **CAUTION:** The remote control transmitter can be programmed to multiple receivers or fans. If this is not desired, turn wall switch off to any other programmable receiver or fan.

FCC Compliance Notice for Remote Control and LED Light Kit

⚠ **CAUTION:** Changes or modifications not approved by the party responsible for compliance could void the user's authority to operate the equipment.

This device complies with Part 15 of the FCC Rules. Operation is subject to the following two conditions: (1) this device may not cause harmful interference, (2) this device must accept any interference received, including interference that may cause undesired operation.

NOTE: This equipment has been tested and found to comply with the limits for a Class B digital device, pursuant to Part 15 of the FCC Rules. These limits are designed to provide reasonable protection against harmful interference in a residential installation. This equipment generates, uses and can radiate radio frequency energy and, if not installed and used in accordance with the instructions, may cause harmful interference to radio communications. However, there is no guarantee that interference will not occur in a particular installation. If this equipment does cause harmful interference to radio or television reception, which can be determined by turning the equipment off and on, the user is encouraged to try to correct the interference by one or more of the following measures:

* Reorient or relocate the receiving antenna.
* Increase the separation between the equipment and receiver.
* Connect the equipment into an outlet on a circuit different from that to which the receiver is connected.

Consult the dealer or an experienced radio/TV technician for help.

Distributed by: Litex Industries Inc., P.O. Box 535639, Grand Prairie, TX, 75053; 800-527-1292

1. Remove contents of remote pack (K). Remove battery cover from back of remote control transmitter. Remove protective covering from battery--protective covering may be discarded at this time. Install battery with positive (+) end toward top of remote control transmitter.

   ⚠ **WARNING:** Battery is to be inserted with the correct polarity.

   Replace battery cover on remote control transmitter.

   ⚠ **WARNING:** ***Choking/Ingestion Hazard*** - Small parts. Keep battery away from children.

   NOTE: Battery is NOT rechargeable. Remove battery with low or no charge and dispose of properly.

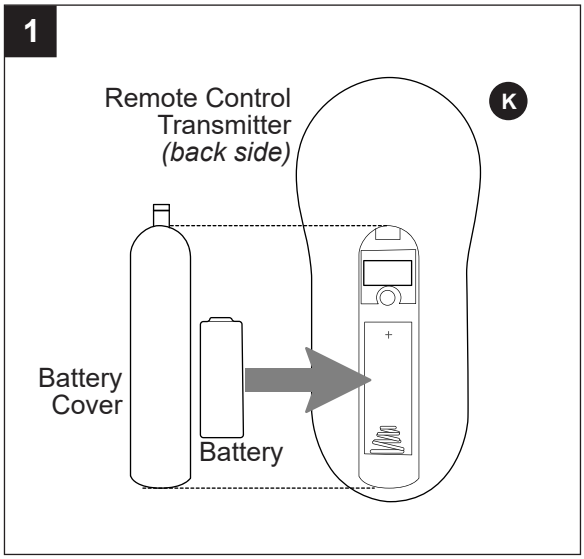

⚠ **CAUTION:** “DO NOT DISPOSE OF BATTERY IN FIRE, BATTERY MAY EXPLODE OR LEAK.” - When disposing of household alkaline batteries, it is best to check with your local and state recycling or household hazardous waste coordinators concerning the specifics of the program in your area. You may also locate a recycling center by calling 800-8-BATTERY or 877-2-RECYCLE or visit www.epa.gov/epawaste/index.htm or www.earth911.org for more information.

2. Restore electrical power. Within 30 seconds of restoring electrical power, press and hold the "0" button on the remote control transmitter for 5 seconds or until light on the fan blinks twice. Use the remote control transmitter to test the light and fan functions to confirm the learning process is complete.

   NOTE: Remove protective covering from front of remote control transmitter and discard.

   IMPORTANT: To prevent damage to remote control transmitter, remove the battery if not used for long periods. Store the remote control transmitter away from excess heat or humidity.

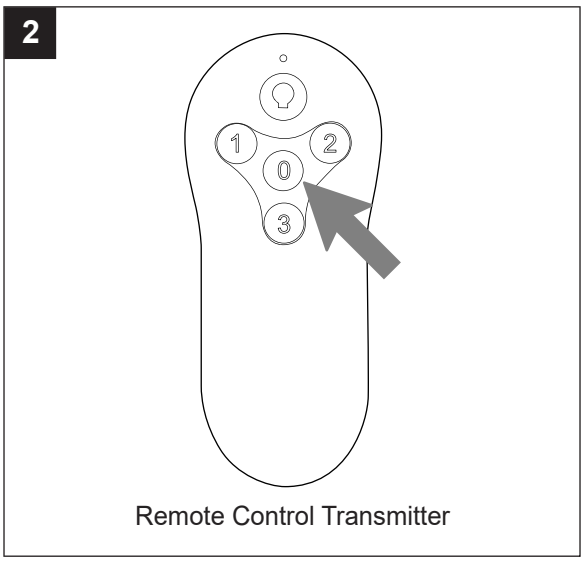

Remote Control Transmitter

3. Operation buttons on the panel of the remote control transmitter:

3 button	for fan **HIGH** speed
2 button	for fan **MEDIUM** speed
1 button	for fan **LOW** speed
0 button	to turn fan **OFF**
button	to turn light **ON** or **OFF**

   Tap button quickly to turn lights off or on. Hold button down to increase or decrease lights. If you press button in excess of 0.7 seconds, it becomes a dimmer. The lights vary cyclically in 8 seconds. The light button has an auto resume function, which keeps the light at the same brightness as the last time it was turned off.

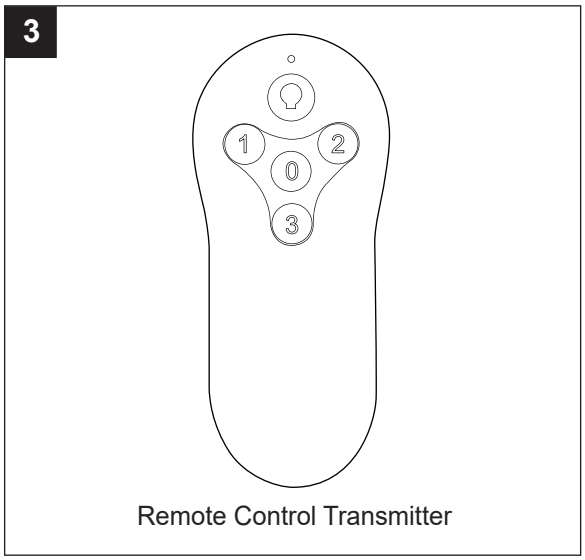

Remote Control Transmitter

4. Use the fan reverse switch on the fitter plate (D) to optimize the fan for seasonal performance. A ceiling fan will allow you to raise your thermostat setting in summer and lower your thermostat setting in winter without feeling a difference in your comfort.

   ⚠ **CAUTION:** Turn fan off at wall switch and let blades (G) come to a complete stop before manually activating the reverse switch.

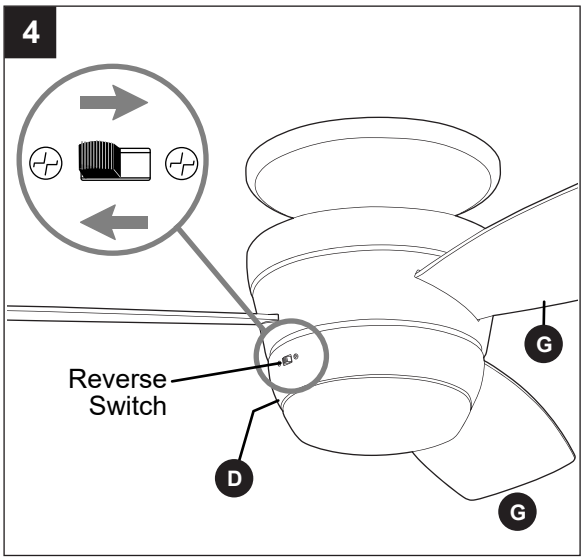

OPERATING INSTRUCTIONS

4a. In **warmer** weather, setting the reverse switch in the LEFT position will result in downward airflow creating a wind chill effect.

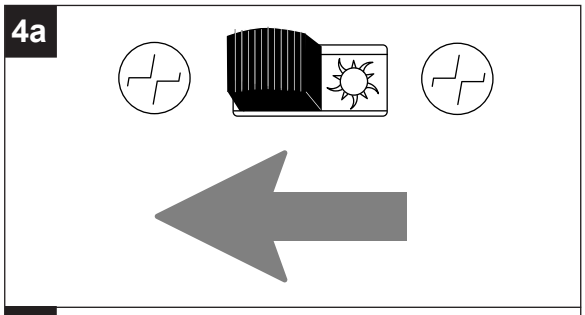

4b. In **cooler** weather, setting the reverse switch in the RIGHT position will result in upward airflow that can help move stagnant, hot air off the ceiling area.

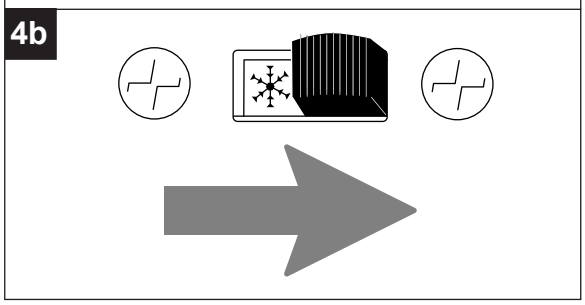

4c. **IMPORTANT:** Reverse switch must be set either ***completely*** LEFT or ***completely*** RIGHT for fan to function. If the reverse switch is set in the middle position, fan will not operate.

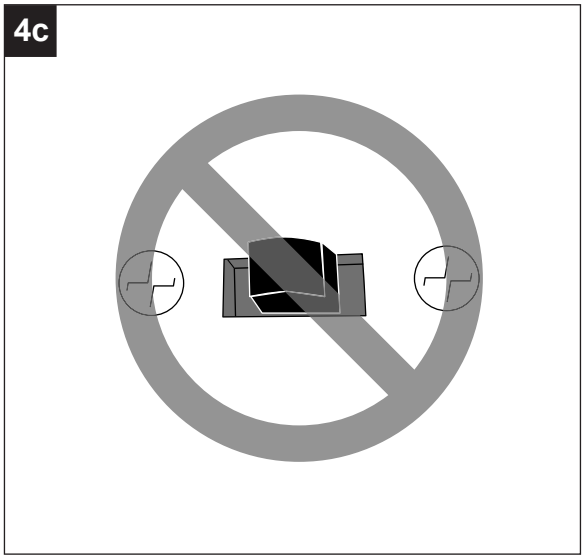

CARE AND MAINTENANCE

At least twice each year, check mounting plate screws and then tighten all screws on the fan. Clean motor assembly with only a soft brush or lint-free cloth to avoid scratching the finish. Clean blades with a lint-free cloth.

⚠ **WARNING:** Shut off main power supply before beginning any maintenance. Do not use water or a damp cloth to clean the ceiling fan.

Total wattage for the light kit for this fan is 18 watts; do not attempt to replace the LEDs.

TROUBLESHOOTING

⚠ **WARNING:** Before beginning work, shut off the power supply to avoid electrical shock.

PROBLEM	POSSIBLE CAUSE	CORRECTIVE ACTION
Fan does not move.	1. Reverse switch not engaged. 2. Power is off or fuse is blown. 3. Faulty wire connection. 4. Wires in fitter plate not wired correctly. 5. Learning code process between fan and remote control transmitter may not have been successful and learning code was not activated.	1. Push switch firmly either left or right. 2. Turn power on or check fuse at circuit breaker. 3. Turn power off. Loosen motor assembly and check all connections. 4. Check that male and female plugs in fitter plate are connected properly according to instructions on page 11. 5. Turn off power and repeat instructions in Step 2 on page 14.
Noisy operation.	1. Blades are loose. 2. Cracked blade. 3. Full range dimmer switch. 4. Fan is new. 5. Motor assembly is loose.	1. Tighten all blade screws. 2. Replace blade. 3. Use only with included speed control device. 4. Allow fan a “break in” period of a few days, especially when running the fan at Medium and High speeds. 5. Verify mounting plate screws are secure according to instructions on page 10.
Excessive wobbling.	1. Blades are loose. 2. Blade incorrectly attached. 3. Unbalanced blades. 4. Fan not securely mounted.	1. Tighten all blade screws. 2. Re-install blades. 3. Switch one blade with a blade from the opposite side. 4. Verify mounting plate is secure.
Fan operates but light fails.	1. Wires in outlet box not wired properly. 2. Wall switch to light is off. 3. Wires in fitter plate not wired correctly.	1. Check wires in outlet box and, if necessary, re-wire according to instructions on page 9. 2. Make sure wall switch to light is on. 3. Check that molex connections in fitter plate are connected properly according to instructions on page 12.

NOTE: A small amount of "wobble" is normal and should not be considered a defect.

Please note that any and all additional questions or issues concerning the product may be addressed with Customer Service at **888-251-1003**.

LIMITED LIFETIME WARRANTY

Set forth below, the manufacturer warrants the fan motor for this ceiling fan to be free from defects in workmanship and material for the life of the product. Also, subject to the limitations below, the manufacturer warrants all ceiling fan parts (“ceiling fan parts” excludes the motor and parts made in whole or in part with glass) to be free from defects in workmanship and material for a period of one year after the date of purchase by the original purchaser at retail.

All claims must be made by the original purchaser, whether such purchaser purchased the product through a store or contractor. Ceiling fan part defects must be reported within the first year from the date of purchase. Parts made in whole or in part with glass and the finishes of metal and other surfaces are not warranted.

Purchasers are responsible for all costs of removing and reinstalling the product. Any damage to any part caused by ordinary wear and tear, accident, misuse, or improper installation, is not covered by this warranty. The manufacturer assumes no responsibility whatsoever for fan installation. Any service performed by a non-licensed electrician will render the warranty invalid.

The manufacturer’s sole responsibility shall be to repair or replace the motor, parts, or product within the terms stated above. The manufacturer shall not be liable for any loss or damage of any kind, including any incidental or consequential damages resulting directly or indirectly, from any breach of warranty, express or implied, or any other failure of this product. Some states do not allow the exclusion or limitation of incidental or consequential damages so this limitation may not apply to you.

If the original purchaser ceases to own the fan, this warranty is voided.

Should the purchaser encounter a problem with your fan related to defects in workmanship or materials within the warranty period associated with the defective part, the manufacturer agrees to replace the defective part without charge, or at its option, to replace the ceiling fan with a comparable or superior model.

The manufacturer’s warranties are limited to the written warranties set out in this ceiling fan limited lifetime warranty. All other express and implied warranties, including, without limitation, the implied warranty of fitness for a particular purpose and the implied warranty of merchantability are disclaimed. Some states do not allow the disclaimer of implied warranties, so this disclaimer may not apply to you.

REPLACEMENT PART LIST

All parts are replaceable (see parts list in “Package Contents” on Page 5), however, only the parts listed below are under warranty. For replacement parts, call our customer service department at **888-251-1003**, 8 a.m. - 8 p.m., EST, Monday - Sunday.
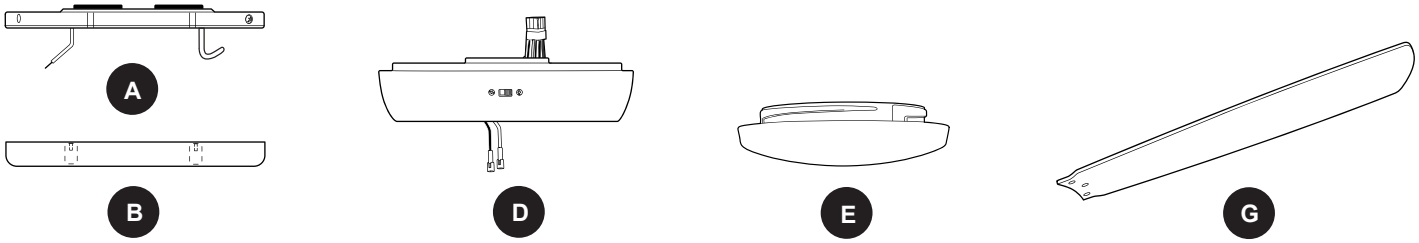
PART	DESCRIPTION	#807421 PART #	#1059534 PART #	#2599776 PART #	#2807158 PART #	#807422 PART #
A	Mounting Plate	807421-A	1059534-A	2599776-A	2807158-A	807422-A
B	Canopy Ring	807421-B	1059534-B	2599776-B	2807158-B	807422-B
D	Fitter Plate	807421-D	1059534-D	2599776-D	2807158-D	807422-D
E	Shade	807421-E	1059534-E	2599776-E	2807158-E	807422-E
G	Blade	807421-G	1059534-G	2599776-G	2807158-G	807422-G