Triton® | K-T7744-4

Wall-mount valve trim with lever handles, requires valve

Features

- Lever handle style option



Sustainability

CONTAINS 10% RECYCLED CONTENT

Available Colors/Finishes

Color tiles intended for reference only.

CP Polished Chrome

1-800-4KOHLER (1-800-456-4537)
Kohler Co. reserves the right to make revisions without notice to product specifications.
For the most current specification sheet, go to www.kohler.com USA or www.kohler.ca Canada.
3-27-2026 19:7 - US-CA

Codes/Standards

ASME A112.18.1/CSA B125.1

Technical Information

All product dimensions are nominal.

Handle

Handle Style/ Type:	Lever

Valves

Required Valve:	Transfer

Material

- Brass

Recommended Products/Accessories

K-23723 Faucet cleaner

Warranty

See website for detailed warranty information.

KOHLER® Faucet Lifetime Limited Warranty

1-800-4KOHLER (1-800-456-4537)
Kohler Co. reserves the right to make revisions without notice to product specifications.
For the most current specification sheet, go to www.kohler.com USA or www.kohler.ca Canada.
3-27-2026 19:7 - US-CA

THE BOLD LOOK OF KOHLER®

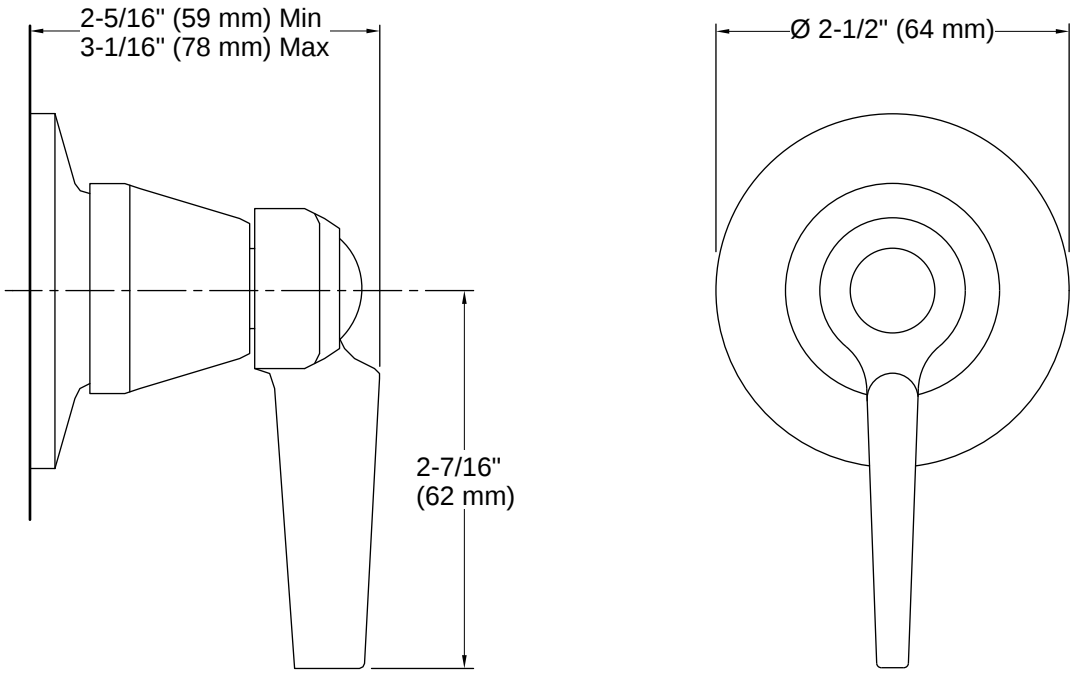

Installation

- For 8" (203 mm) centers

Installation Notes

Install this product according to the installation instructions.

1-800-4KOHLER (1-800-456-4537)
Kohler Co. reserves the right to make revisions without notice to product specifications.
For the most current specification sheet, go to www.kohler.com USA or www.kohler.ca Canada.
3-27-2026 19:7 - US-CA

THE BOLD LOOK OF KOHLER.