Kitchen Faucet
Installation Manual

W-314(ES)

Warranty Duration

All components of this faucet system are covered under a lifetime limited warranty, ensuring they are free from defects in material and workmanship for the original purchaser.

Repair and Replacement

If the product shows defects in material or workmanship under normal use and within the warranty period, we will, at our discretion, either repair the product or provide a replacement at no cost to the original purchaser. Please note that proof of purchase (e.g., an invoice) is required when requesting service. The warranty does not cover damages caused by improper installation, misuse, or modifications.

Exclusions

We shall not be responsible for the following cases:

- Damage to the product caused by improper installation, misuse, unauthorized repair or replacement, or abuse (including damage during shipment).
- Damage to the product caused by improper dismantling after installation.
- Damage resulting from abnormal water pressure or impurities in water pipes, which is not covered under this warranty.
- Rust on the product due to insufficient care and maintenance, which is not covered under this warranty.
- Damage caused by natural disasters such as fire, flood, earthquake, lightning storms, etc., which is not covered under this warranty.

I hope this helps! If you have any further questions or concerns, please let me know.

Having Trouble? Contact us.

Email: info@faucetsupport.com

Toll Free: 1-888-969-6880

M3171
SFS-1174

CONTENT

Kitchen Faucet Installation Manual ---------- **(1-3)**

CONTENIDO

Manual de Instalación del Grifo de Cocina ---------- **(4-6)**

Prior to Installation

1. Ensure that all necessary parts are available by referring to the diagram and parts list.
2. Ensure that your basin matches the kitchen faucet size.
3. Do not disassemble the main faucet body, as it has been properly installed and tested before delivery from the factory.
4. Turn off the hot and cold water supply before starting the installation.
5. To prevent the faucet from clogging, flush the water pipes before installation.
6. After completing the installation, check all joints and connections for leaks.

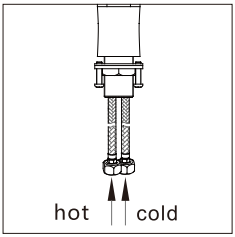

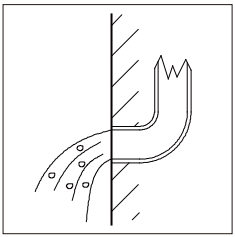

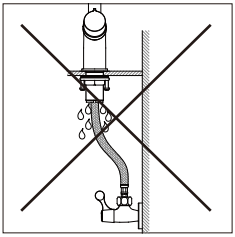

Standard Part List

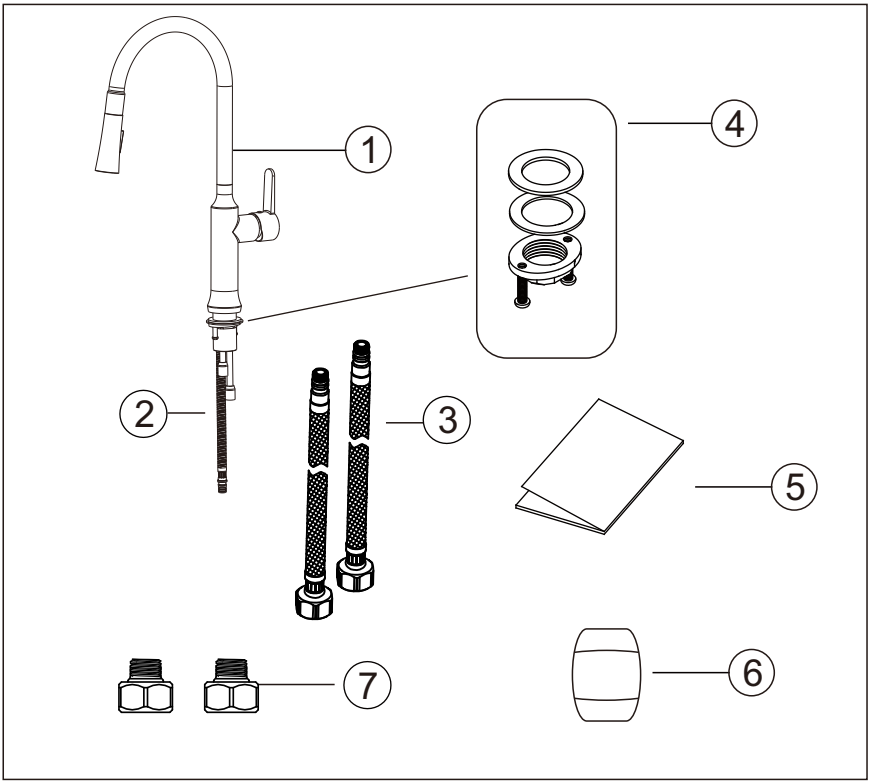

NO.	Part Name	Qty
1	Faucet body	1
2	Inlet pipe	1
3	Quick-connect pipe	1 pair
4	Mounting hardware(rubber washer, metal washer, mounting nut, mounting screws)	1 set
5	Instruction manual	1
6	Weight balance	1
7	Hose adapter change G9/16 to G1/2	2

Installation Step

1

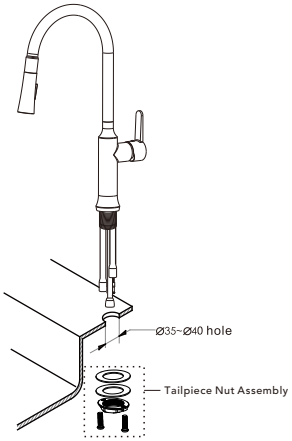

1. Drill a hole in the installation surface (φ35-40mm) and remove the Tailpiece Nut Assembly.

2

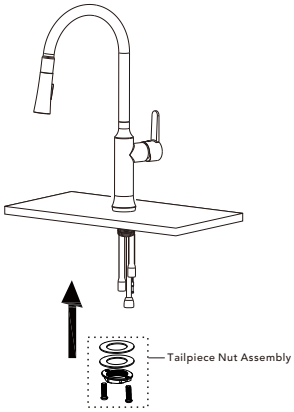

2.Insert faucet body into the hole on the countertop. Attach Tailpiece Nut Assembly from underneath the sink.

3

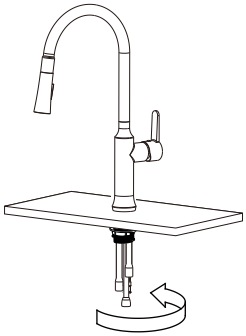

3. Adjust direction of faucet body. Tighten Tailpiece Nut Assembly until snug.

4

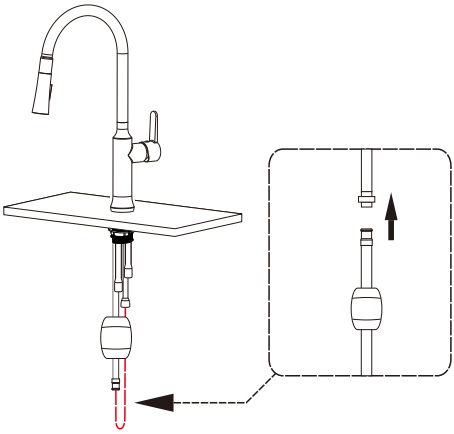

4. Unscrew the weight balance, clamp it onto the pull-out hose, then tighten the screw again. Connect the pull-out hose as shown in the diagram.

5

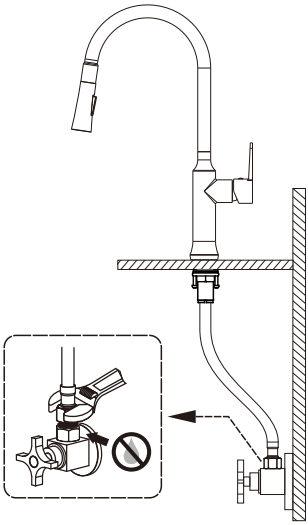

5. Connect the red and blue hoses to the corresponding hot and cold inlet pipes of the faucet body, then connect the other ends to the hot and cold angle valves. Tighten them with a wrench and turn on the hot and cold water to test for leaks.

Antes de la instalación

1. Asegúrese de que todas las piezas necesarias estén disponibles consultando el diagrama y la lista de componentes.
2. Asegúrese de que su lavabo sea compatible con el tamaño del grifo de cocina.
3. No desmonte el cuerpo principal del grifo, ya que ha sido correctamente instalado y probado antes de salir de fábrica.
4. Cierre el suministro de agua caliente y fría antes de comenzar la instalación.
5. Para evitar obstrucciones en el grifo, enjuague las tuberías de agua antes de la instalación.
6. Después de completar la instalación, verifique todas las uniones y conexiones para asegurarse de que no haya fugas.

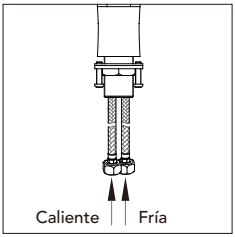

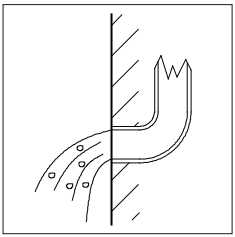

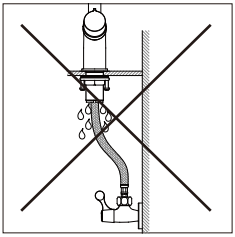

Lista de piezas estándar

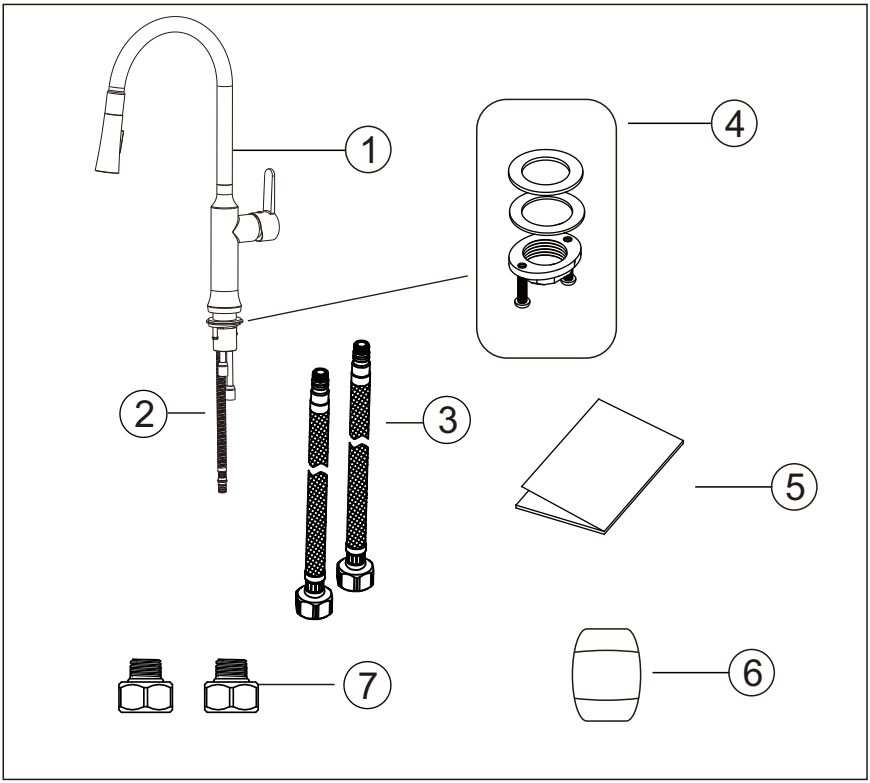

N.°	Nombre de la pieza	Cantidad
1	Cuerpo del grifo	1
2	Tubería de entrada	1
3	Tubo de conexión rápida	1 par
4	Accesorios de montaje (arandela de goma, arandela metálica, tuerca de montaje, tornillos de montaje)	1 juego
5	Manual de instrucciones	1
6	Contrapeso	1
7	Adaptador de manguera para cambiar de G9/16 a G1/2	2

Paso de instalación

1

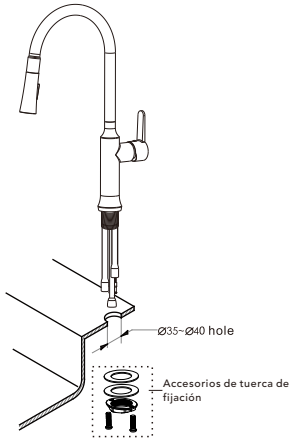

1. Perfore un orificio en la superficie de nstalación (φ35–40mm) y retire el conjunto de tuerca del vástago.

2

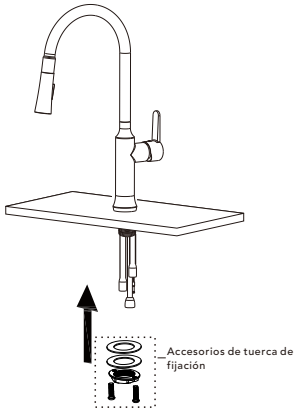

2. Inserte el cuerpo del grifo en el orificio del mostrador. Coloque el conjunto de tuerca del vástago desde la parte inferior del fregadero.

3

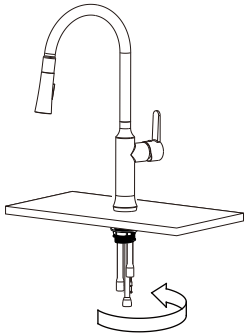

3. Ajuste la dirección del cuerpo del grifo. Apriete el conjunto de tuerca del vástago hasta que quede bien sujeto.

4

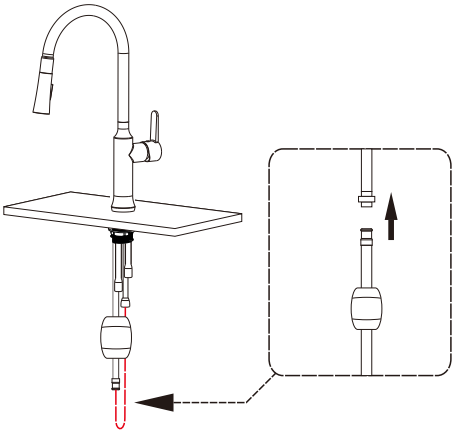

4. Desenrosque el contrapeso, sujételo a la manguera extraíble y luego vuelva a apretar el tornillo. Conecte la manguera extraíble como se muestra en el diagrama.

5

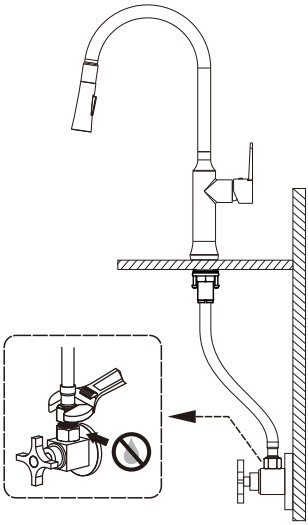

5. Conecte las mangueras roja y azul a las tuberías de entrada correspondientes de agua caliente y fría del cuerpo del grifo, luego conecte los otros extremos a las válvulas angulares de agua caliente y fría. Apriételas con una llave y abra el agua caliente y fría para comprobar si hay fugas.